2017-2018

MAGNETI MARELLI

Candele d'accensione, Spark plugs, Zündkerzen, Bougies d'allumage, Bujías, Velas de ignição, Μπουζί ανάφλεξης, Świece zapłonowe, Свеча зажигания, Ateşleme bujisi

Indice
Contents
Inhaltsverzeichnis
Sommaire
Índice
Índice
Περιεχόμενα
Spis treści
Содержание
İndeks

Indice costruttori
Manufacturers index
Herstellerverzeichnis
Sommaire par marques
Índice constructores
Índice de montadoras
Ευρετήριο κατασκευαστών
Indeks producentów
Индекс изготовителей
Üreticiler

3

Legenda
Legend
Legende
Légende
Leyenda
Legenda
Υπόμνημα
Legenda
Легенда
Semboller

6

Applicazione per marca e veicolo
Vehicle application guide
Zuordnung nach Marke und Fahrzeug
Affectations par marques et véhicules
Aplicación por marca y vehículo
Aplicação por marca e veículo
Εφαρμογή ανά μοντέλο
Zastosowanie dla marki i pojazdu
Применение по марке и модели
Marka ve araca göre uygulama

11

Applicazione per codice
Buyers guide
Zuordnung nach Bestellnummer
Affectations par références
Aplicación por referencia
Aplicação por código
Εφαρμογές ανά κωδικό
Zastosowanie dla kodu
Применение по коду
Koda göre uygulama

213

Tavole di comparazione IAM/OES
IAM/OES cross reference guide
Gegenüberstellung IAM/OES
Table de correspondance IAM/OES
Tabla de equivalencias IAM/OES
Tabela de equivalências IAM/OES
Πίνακας αντιστοιχιών IAM/OES
Tabela porównawcza IAM/OES
Кросс-таблица с IAM/OES номерами
IAM/OES çapraz referans tablosu

411

Indice costruttori
Manufacturers index
Herstellerverzeichnis
Sommaire par marques
Índice constructores
Índice de montadoras
Ευρετήριο κατασκευαστών
Indeks producentów
Индекс изготовителей
Üreticiler

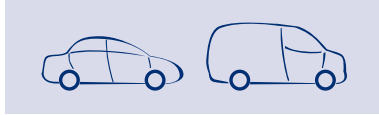

ALFA ROMEO 13
ALPINA 13
ARO 14
ASTON MARTIN 14
AUDI 14
AUSTIN 21
AUTOBIANCHI 22
BEDFORD 22
BENTLEY 22
BMW 22
CADILLAC 27
CHEVROLET 27
CHRYSLER 30
CITROËN 32
DACIA 41
DAEWOO 43
DAIHATSU 46
DODGE 47
DR 48

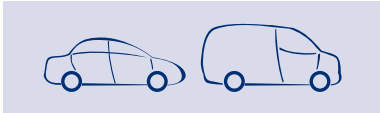

FIAT 48

FORD 57

GREAT WALL 62

HONDA 63

HYUNDAI 66

INFINITI 75

INNOCENTI 75

ISUZU 75

JAGUAR 76

JEEP 76

KIA 77

LADA 80

LANCIA 86

LAND ROVER 88

MASERATI 89

MAZDA 89

MERCEDES-BENZ 98

MINI 104

MITSUBISHI 105

NISSAN 112

OPEL 118

PEUGEOT 128

PIAGGIO 136

PORSCHE 137

PROTON 137

RENAULT 139

ROVER 157

SAAB 160

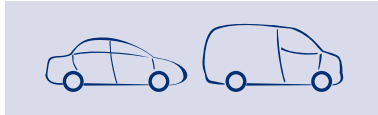

SEAT 160

SKODA 165

SMART 169

SSANGYONG 169

SUBARU 170

SUZUKI 172

TOYOTA 177

VAUXHALL 182

VOLKSWAGEN 189

VOLVO 207

Legenda
Legend
Legende
Légende
Leyenda
Legenda
Υπόμνημα
Legenda
Легенда
Semboller

Costruttore e modello
Make and model
Hersteller und Modell
Marque et modèle
Constructor y modelo
Montadora e modelo
Μάρκα και μοντέλο
Marka i model
Производитель и модель
Üretici ve model

Anno di produzione
Manufacturing year
Baujahr
Année de production
Año de fabricación
Ano de fabricação
Ετος παραγωγής
Rok produkcji
Год производства
Üretim yılı

kW

Potenza motore
Engine power
Motorleistung
Puissance moteur
Potencia motor
Potencia do motor
Ισχύς κινητήρα
Moc silnika
Мощность двигателя
Motor gücü

Codici Magneti Marelli
Magneti Marelli references
Magneti Marelli Nr.
Références Magneti Marelli
Códigos Magneti Marelli
Códigos Magneti Marelli
Κωδικοί Magneti Marelli
Kody Magneti Marelli
Коды Магнети Марелли
Magneti Marelli kodları

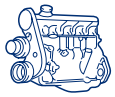

Codice motore
Engine code
Motor code
Code moteur
Código motor
Código motor
Κωδικός κινητήρα
Kod silnika
Номер двигателя
Motor numarasi

Note
Notes
Anmerkungen
Notes
Notas
Notas
Σημείωση
Uwagi
Примечание
Not

QTY

Quantità
Quantity
Menge
Quantité
Cantidad
Quantidade
Ποσότητα
Ilość
Количество
Miktar

IAM/OES

Codice costruttore
OES/IAM Reference
Herstellernummer
Référence Origine (OES/IAM)
Código constructor
Código de montadora
Κωδικός κατασκευαστή
Kod OES/IAM
Оригинальные номера
Üretici kodu

CORE

Tipo di metallo
Type of metal
Verwendetes Metall
Type de métal
Tipo de metal
Rodzaj metalu
Тип металла

Hexagon Size

Misura dell'esagono di serraggio
Hexagon size
Hex-Größe
Taille Hex
Tamaño de hexágono
Rozwartość klucza
Размер шестигранника

Distanza interelettrodica (mm)
Gap (mm)
Zündstrecke
Écartement des pointes
Separación de electrodos
Odstęp pomiędzy elektrodami
Искровой зазор

Seat

Forma (Tipo)
Shape (Type)
Elektrodendesign
Forme (Type)
Forma (tipo)
Kształt (Typ)
Конфигурация зазора

Heat Range

Grado termico
Heat range
Wärmebereich
Valeur thermique
Grado térmico
Wartość cieplna
Калильное число

MAGNETI MARELLI	HEAT RANGE	NGK	BOSCH	DENSO
2	Hot	2	10	9
3	↑	3	9	12
4		4	9	14
5		5	8	16
6		6	7	20
7		7	6	22
8		8	5	24
9	↓	9	3/4	27
10	Cold	10	2	31

Thread Reach

Lunghezza parte filettata
Thread reach
Gewindebereich
Portée
Longitud de rosca
Długość
Длина резьбы

Thread Size

Dimensioni filettatura
Thread size
Gewindegröße
Dimension de filetage
Tamaño de la rosca
Rozmiar gwintu
Диаметр резьбы

Version

Forma (Tipo)
Shape (Type)
Elektrodendesign
Forme (Type)
Forma (tipo)
Kształt (Typ)
Тип электрода

Magneti Marelli After Market Parts and Services S.p.A. ha curato con particolare attenzione la stesura del presente catalogo; declina comunque ogni responsabilità per eventuali errori od omissioni relativi a schemi, disegni, immagini, corrispondenze con i codici O.E. ecc. e si riserva il diritto di apportare modifiche al contenuto senza l'obbligo di darne preventiva comunicazione. Sono particolarmente graditi, da parte degli utenti, commenti, segnalazioni di inesattezze e qualsiasi altro suggerimento atto a rendere più efficace la prossima edizione del catalogo.

Magneti Marelli After Market Parts and Services S.p.A. has devoted its best attention to the editing of this catalogue; it nevertheless declines any responsibility for possible mistakes or omissions regarding figures, drawings, pictures, correspondence with O.E. codes etc. and it reserves the right to modify the contents without prior notice. Users' comments, reports of inaccuracies or any other suggestions which may in any way improve the next edition of this catalogue are warmly welcomed.

Magneti Marelli After Market Parts and Services S.p.A. hat diesen Katalog sorgfältig verfasst. Die Firma enthebt sich jeglicher Verantwortung für eventuelle Fehler oder Auslassungen hinsichtlich Schemen, Darstellungen,Bilder, Zeichnungen, Übereinstimmungen, mit O.E. Codes usw. und behält sich das Recht vor, ohne Ankündigung, am Inhalt Veränderungen vorzunehmen. Anmerkungen, Fehlerhinweise und weitere Anregungen seitens der Kunden werden gerne entgegengenommen, um die nächste Ausgabe des Katalogs effizienter zu gestalten.

Magneti Marelli After Market Parts and Services S.p.A. a soigné avec une attention particulière la rédaction de ce catalogue; elle décline cependant toute responsabilité pour toute erreur ou omission éventuelle dans les schémas, les dessins, les images, les correspondances avec les codes O.E., etc. et se réserve le droit d'en modifier le contenu sans obligation de communication préalable. Les commentaires, les signalisations d'inexactitudes et toute autre suggestion des utilisateurs susceptibles de rendre la prochaine rédaction du catalogue plus efficace seront particulièrement appréciés.

Magneti Marelli After Market Parts and Services S.p.A. ha cuidado con especial atención la redacción del presente catálogo; de todas maneras declina toda responsabilidad por eventuales errores u omisiones relativos a esquemas, diseños, fotos, correspondencia con los códigos O.E., etc., y se reserva el derecho de aportar modificaciones al contenido sin la obligación de previo aviso. Se agradecen especialmente los comentarios, las indicaciones al contenido sin la obligación de previo aviso. Se agradecen especialmente los comentarios, las indicaciones de inexactitudes y cualquier otra sugerencia por parte de los usuarios que sean útiles para hacer más eficaz la próxima edición del catálogo.

A Magneti Marelli After Market Parts and Services S.p.A. cuidou com particular atenção a redação do presente catálogo; como quer que seja, rejeita qualquer responsabilidade face a eventuais erros o omissões relacionados aos esquemas, desenhos, imagens, correspondências aos códigos O.E. etc. e reserva-se o direito de introduzir alterações ao seu conteúdo sem a obrigação de comunicação prévia das mesmas. São particularmente bem aceitos, comentários, sinalizações de inexatidões e qualquer outra sugestão idônea a tornar mais eficaz a próxima edição do catálogo.

Η Magneti Marelli φροντισε με καθε λεπτομερεια την ορθοτητα των στοιχειων αυτου του καταλογου, δεν φερει ομως καμια ευθυνη για τυχον λαθη ή παραληψεις που σχετιζονται με σχηματα, σχεδια, εικόνες, αντιστοιχιες με γνησια νουμερα κτλ. και επιφυλασσεται του δικαιωματος να αλλαξει το περιεχομενο του καταλογου οποιαδηποτε στιγμη χωρις προτερη ενημερωση. Οποιαδηποτε σχολια η παρατηρησεις, με στοχο την βελτιωση του καταλογου, ειναι ευπροσδεκτα.

Firma Magneti Marelli After Market Parts and Services S.p.A dołożyła szczególnych starań przy opracowywaniu niniejszego katalogu. Nie ponosi ona jednak żadnej odpowiedzialności za ewentualne błędy lub braki dotyczące schematów, rysunków, zgodności z kodami O.E., itp. u. Firma Magneti Marelli After Market Parts and Services S.p.A zastrzega sobie prawo do wprowadzania zmian bez obowiązku uprzedniego powiadamiania o tym. Szczególnie mile widziane są komentarze i sygnały dotyczące nieprawidłowości oraz jakiekolwiek inne sugestie zgłaszane przez klientów, mające na celu udoskonalenie następnych edycji katalogu.

Magneti Marelli After Market Parts and Services S.p.A. уделила особое внимание созданию этого каталога. Но, несмотря на это, мы не несем ответственности за возможные ошибки или неточности в цифрах, изображениях или кросс-номерах. Также мы оставляем за собой право вносить любые изменения в содержание каталога без предварительного уведомления. Мы приветствуем любые ваши замечания и комментарии, которые обязательно учтем при подготовке следующих выпусков каталога.

Magneti Marelli After Market Parts and Services S.p.A bu katalogdaki bilgileri çok dikkatli bir şekilde hazırlamış olup, buna rağmen rakam, çizim, resim, OE kodlari ve diğer tüm bilgilerdeki hata ya da eksikliklerin sorumluluğunu kabul etmez ve ön bilgi vermeden değişiklik yapma hakkını saklı tutar. Bir sonraki kataloğun iyilestirilmesine yardımcı olacak kullanıcı yorumları, hata raporları, ya da diğer öneriler değerlendirmeye alınacaktır.

È vietata la riproduzione, anche parziale, del contenuto del presente catalogo senza preventiva autorizzazione scritta della Magneti Marelli After Market Parts and Services S.p.A, che tutelerà i propri diritti a termine di legge.

It is forbidden to reproduce, even partially, the contents of this catalogue without prior written consent from Magneti Marelli After Market Parts and Services S.p.A., who will protect its rights in accordance with the law.

Die Vervielfältigung, auch teilweise, des urheberrechtlich geschützten Inhalts des vorliegenden Katalogs ist ohne schriftliche Genehmigung durch Magneti Marelli After Market Parts and Services S.p.A. untersagt.

Il est interdit de reproduire même partiellement le contenu de ce catalogue sans autorisation écrite préalable de Magneti Marelli After Market Parts and Services S.p.A., qui protégera ses droits selon les termes de la loi.

Está prohibida la reproducción, total o parcial, del contenido del presente catálogo sin previa autorización escrita de Magneti Marelli After Market Parts and Services S.p.A, que protegerá sus propios derechos con arreglo a la ley.

É proibida a reprodução, também parcial, do conteúdo do presente catálogo sem a prévia autorização escrita de Magneti Marelli After Market Parts and Services S.p.A, que defenderá os próprios direitos, nos termos de lei.

Απαγορευται η αναπαραγωγη, ολικη η μερικη,του περιεχομενου του παροντος καταλογου χωρις την γραπτη εξουσιοδοτηση της Magneti Marelli After Market Parts and Services S.p.A.

Zabroniona jest nawet częściowa reprodukcja zawartości katalogu bez uprzedniej pisemnej autoryzacji ze strony firmy Magneti Marelli After Market Parts and Services S.p.A., która chroni swą własność zgodnie z przepisami prawa.

Запрещается полная или частичная перепечатка содержания каталога без предварительного письменного разрешения Magneti Marelli After Market Parts and Services S.p.A. Компания будет отстаивать свои интересы в соответствии с законом.

Tüm yasal hakların sahibi olan Magneti Marelli After Market Parts and Services S.p.A. ’in yazılı izni olmaksızın mevcut kataloğun kısmen de olsa çoğaltılması yasaktır.

Applicazione per marca e veicolo
Vehicle application guide
Zuordnung nach Marke und Fahrzeug
Affectations par marques et véhicules
Aplicación por marca y vehículo
Aplicação por marca e veículo
Εφαρμογή ανά μοντέλο
Zastosowanie dla marki i pojazdu
Применение по марке и модели
Marka ve araca göre uygulama

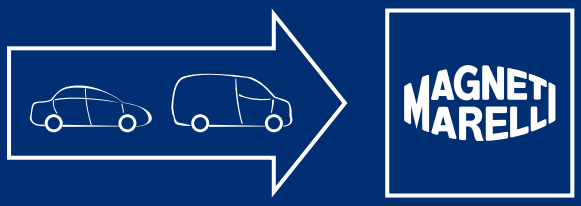

	kW					CORE		QTY
ALFA ROMEO								
147 (937_)								
1.6 16V T.SPARK ECO (937AXA1A)	77	AR 37203	01/01 → 03/10	**YJT6KMR**		Copper	1.0	08
156 (932_)								
2.5 V6 24V (932A1)	140	AR 32402	09/97 → 12/01	**YJT6KMR**		Copper	1.0	06
	140	AR 32401	09/97 → 12/01	**YJT6KMR**		Copper	1.0	06
2.5 V6 24V (932A11_)	141	AR 32405	10/00 → 09/05	**YJT6KMR**	→ 03/03	Copper	1.0	06
156 Sportwagon (932_)								
2.5 V6 24V (932A1)	140	AR 32401	05/00 → 08/03	**YJT6KMR**		Copper	1.0	06
2.5 V6 24V (932B11_)	141	AR 32405	10/00 → 05/06	**YJT6KMR**	→ 03/03	Copper	1.0	06
159 (939_)								
1.8 MPI	103	939 A4.000	03/07 → 11/11	**A5KMR**	→ 02/08	Copper	1.1	04
MITO (955_)								
1.4	51	955 A9.000	05/11 →	**CT7DKMR**		Copper	0.8	04
	57	350 A1.000	03/11 →	**CT7DKMR**		Copper	0.8	04
	57	955 A1.000	03/11 →	**CT7DKMR**		Copper	0.8	04
	58	955 A1.000	09/08 →	**CT7DKMR**		Copper	0.8	04
	70	199 A6.000	09/08 →	**CT7DKMR**		Copper	0.8	04

ALPINA								
B3 (E36)								
3.2	195	M60 B30 (308S)	04/96 → 04/99	**D6KMR**		Copper	0.9	06
B3 (E46)								
3.3	206	M52 B28 (286S)	05/99 → 07/02	**D6KMR**		Copper	0.9	06
3.3 Trazione integrale	206	M52 B28 (286S7T)	11/01 → 01/05	**D6KMR**		Copper	0.9	06
3.4 S	224	M52 B28 (286ST5)	08/02 → 01/06	**D6KMR**		Copper	0.9	06
B8 (E36)								
4.6	245	M62 B46 (468S4K)	01/95 → 03/98	**D6KMR**		Copper	0.9	08
B10 (E34)								
3.4	187	M30 B34 (34C20)	04/88 → 12/92	**CT6FM**		Copper	0.8	06
	187	M30 B34 (34C20)	04/88 → 12/92	**CW7LP**		Nickel	0.8	06
B10 (E39)								
3.2	191	M60 B30 (308S6K)	08/97 → 12/98	**D6KMR**		Copper	0.9	06
3.3	206	M52 B28 (286S7T)	01/99 → 02/03	**D6KMR**		Copper	0.9	06
4.6 V8	250	M62 B46 (468S72)	12/96 → 10/98	**D6KMR**		Copper	0.9	08
	255	M62 B46 (468S72)	10/98 → 09/02	**D6KMR**		Copper	0.9	08
B12 (E38)								
5.7	285	M70 B57 (5714K2)	12/95 → 09/98	**D6KMR**		Copper	0.9	12
6.0	316	M73 B54 (5412AG)	07/99 → 07/01	**D6KMR**		Copper	0.9	12
ROADSTER (Z8)								
4.8 V8	280	M73 B48 (488S12)	06/02 → 10/03	**D6KMR**		Copper	0.9	08
ROADSTER S (Z4)								
3.3	221	S54327S7	07/03 → 12/05	**D6KMR**		Copper	0.9	06

	kW					CORE		QTY
ARO								
SPARTANA								
1.2	40	C3G 702	01/99 → 10/06	**CT5FMR**		Copper	0.8	04
ASTON MARTIN								
VIRAGE								
5.3	246	40HTA	01/88 → 12/92	**CT6KMMR**		Copper	0.8	08
	246	40HTE	09/90 → 12/95	**CT6KMMR**		Copper	0.8	08
	246	40HTE	01/88 → 12/92	**CT6KMMR**		Copper	0.8	08
	246	40HTE	01/95 → 12/95	**CT6KMMR**		Copper	0.8	08
	246	40HTE	01/94 → 12/95	**CT6KMMR**		Copper	0.8	08
	246	40HTE	01/93 → 12/95	**CT6KMMR**		Copper	0.8	08
AUDI								
80 (89, 89Q, 8A, B3)								
1.6	51	PP	08/87 → 09/91	**CJT6FMR**		Copper	0.8	04
2.0 E	83	3A	08/88 → 10/90	**CJT6FMR**		Copper	0.8	04
2.0 E quattro	83	3A	08/88 → 09/90	**CJT6FMR**		Copper	0.8	04
80 (8C, B4)								
1.6	52	ABM	09/91 → 12/94	**CJT6FMR**		Copper	0.8	04
1.6 E	74	ADA	06/93 → 12/94	**CJT6FMR**		Copper	0.8	04
2.0	66	ABT	09/91 → 12/94	**CJT6FMR**		Copper	0.8	04
2.0 E	85	ABK	09/91 → 12/94	**CJT6FMR**		Copper	0.8	04
2.0 E quattro	85	ABK	09/91 → 12/94	**CJT6FMR**		Copper	0.8	04
2.6	110	ABC	07/94 → 12/94	**YJT6KMR**		Copper	1.0	06
2.6 quattro	110	ABC	06/92 → 12/94	**YJT6KMR**		Copper	1.0	06
2.8	128	AAH	09/91 → 12/94	**YJT6KMR**		Copper	1.0	06
2.8 quattro	128	AAH	09/91 → 12/94	**YJT6KMR**		Copper	1.0	06
90 (89, 89Q, 8A, B3)								
2.0	85	PS	07/88 → 09/91	**CJT6FMR**		Copper	0.8	05
90 (8C, B4)								
1.6	52	ABM	09/91 → 12/94	**CJT6FMR**		Copper	0.8	04
1.6 E	74	ADA	06/93 → 12/94	**CJT6FMR**		Copper	0.8	04
2.0	66	ABT	09/91 → 12/94	**CJT6FMR**		Copper	0.8	04
2.0 E	85	ABK	09/91 → 12/94	**CJT6FMR**		Copper	0.8	04
2.0 E quattro	85	ABK	09/91 → 12/94	**CJT6FMR**		Copper	0.8	04
2.6	110	ABC	07/94 → 12/94	**YJT6KMR**		Copper	1.0	06
2.6 quattro	110	ABC	06/92 → 12/94	**YJT6KMR**		Copper	1.0	06
2.8	128	AAH	09/91 → 12/94	**YJT6KMR**		Copper	1.0	06
2.8 quattro	128	AAH	09/91 → 12/94	**YJT6KMR**		Copper	1.0	06
100 (44, 44Q, C3)								
2.0 Cat	85	RT	01/88 → 11/90	**CJT6FMR**		Copper	0.8	05

	kW					CORE		QTY
AUDI								
100 (4A, C4)								
2.0	74	AAE	12/90 → 06/94	**CJT6FMR**		Copper	0.8	04
2.0 E	85	AAD	12/90 → 06/94	**CJT6FMR**		Copper	0.8	04
	85	ABK	12/90 → 06/94	**CJT6FMR**		Copper	0.8	04
2.3 E	98	AAR	12/90 → 06/94	**CJT6FMR**		Copper	0.8	05
2.6	102	ACZ	07/93 → 06/94	**YJT6KMR**		Copper	1.0	06
	110	ABC	03/92 → 06/94	**YJT6KMR**		Copper	1.0	06
2.6 quattro	110	ABC	04/92 → 06/94	**YJT6KMR**		Copper	1.0	06
2.8 E	128	AAH	12/90 → 06/94	**YJT6KMR**		Copper	1.0	06
2.8 E quattro	128	AAH	12/90 → 06/94	**YJT6KMR**		Copper	1.0	06
500 (44, 44Q, C3)								
2.0 Cat	85	RT	01/88 → 11/90	**CJT6FMR**		Copper	0.8	05
4000 (89, 89Q, 8A, B3)								
1.6	51	PP	08/87 → 09/91	**CJT6FMR**		Copper	0.8	04
2.0 E	83	3A	08/88 → 10/90	**CJT6FMR**		Copper	0.8	04
2.0 E quattro	83	3A	08/88 → 09/90	**CJT6FMR**		Copper	0.8	04
5000 (44, 44Q, C3)								
2.0 Cat	85	RT	01/88 → 11/90	**CJT6FMR**		Copper	0.8	05
A2 (8Z0)								
1.4	55	AUA	02/00 → 08/05	**YJT6KMR**		Copper	1.0	04
	55	BBY	02/00 → 08/05	**YJT6KMR**		Copper	1.0	04
1.6 FSI	81	BAD	05/02 → 08/05	**YJT6KMR**		Copper	1.0	04
A3 (8L1)								
1.6	74	AEH	09/96 → 05/03	**YJT6KMR**		Copper	1.0	04
	74	APF	09/96 → 05/03	**YJT6KMR**		Copper	1.0	04
	74	AKL	09/96 → 05/03	**YJT6KMR**		Copper	1.0	04
	75	BFQ	08/00 → 05/03	**YJT6KMR**		Copper	1.0	04
	75	AVU	08/00 → 05/03	**YJT6KMR**		Copper	1.0	04
1.8	92	AGN	09/96 → 05/03	**YJT6KMR**		Copper	1.0	04
	92	APG	09/96 → 05/03	**YJT6KMR**		Copper	1.0	04
1.8 20V	92	AGN	09/96 → 05/03	**YJT6KMR**		Copper	1.0	04
	92	APG	09/96 → 05/03	**YJT6KMR**		Copper	1.0	04
A3 (8P1)								
1.6	75	BSF	05/03 → 08/12	**YJT6KMR**	→ 12/10	Copper	1.0	04
	75	BSE	05/03 → 08/12	**YJT6KMR**	→ 12/10	Copper	1.0	04
	75	BGU	05/03 → 08/12	**YJT6KMR**	→ 12/10	Copper	1.0	04
1.6 E-Power	75	CCSA	01/11 → 08/12	**YJT6KMR**		Copper	1.0	04
	75	CMXA	01/11 → 08/12	**YJT6KMR**		Copper	1.0	04
1.6 FSI	85	BAG	08/03 → 09/07	**YJT6KMR**		Copper	1.0	04
	85	BLF	08/03 → 09/07	**YJT6KMR**		Copper	1.0	04
	85	BLP	08/03 → 09/07	**YJT6KMR**		Copper	1.0	04

	kW					CORE		QTY
AUDI								
A3 (8P1)								
2.0 FSI	110	AXW	05/03 → 06/08	**7LPR**		Nickel	0.8	04
	110	BLY	05/03 → 06/08	**7LPR**		Nickel	0.8	04
	110	BLX	05/03 → 06/08	**7LPR**		Nickel	0.8	04
	110	BVZ	05/03 → 06/08	**7LPR**		Nickel	0.8	04
	110	BVY	05/03 → 06/08	**7LPR**		Nickel	0.8	04
	110	BLR	05/03 → 06/08	**7LPR**		Nickel	0.8	04
	110	BMB	05/03 → 06/08	**7LPR**		Nickel	0.8	04
	110	AXW	05/03 → 06/08	**CT6KMR**		Copper	0.8	04
	110	BLY	05/03 → 06/08	**CT6KMR**		Copper	0.8	04
	110	BLX	05/03 → 06/08	**CT6KMR**		Copper	0.8	04
	110	BVZ	05/03 → 06/08	**CT6KMR**		Copper	0.8	04
	110	BVY	05/03 → 06/08	**CT6KMR**		Copper	0.8	04
	110	BLR	05/03 → 06/08	**CT6KMR**		Copper	0.8	04
	110	BMB	05/03 → 06/08	**CT6KMR**		Copper	0.8	04
A3 (8P7)								
1.6	75	BSE	09/08 → 05/10	**YJT6KMR**		Copper	1.0	04
A3 (8PA)								
1.6	75	BSE	09/04 → 03/13	**YJT6KMR**	→ 12/10	Copper	1.0	04
	75	BGU	09/04 → 03/13	**YJT6KMR**	→ 12/10	Copper	1.0	04
	75	BSF	09/04 → 03/13	**YJT6KMR**	→ 12/10	Copper	1.0	04
1.6 E-Power	75	CCSA	01/11 → 03/13	**YJT6KMR**		Copper	1.0	04
	75	CMXA	01/11 → 03/13	**YJT6KMR**		Copper	1.0	04
1.6 FSI	85	BLF	09/04 → 09/07	**YJT6KMR**		Copper	1.0	04
	85	BLP	09/04 → 09/07	**YJT6KMR**		Copper	1.0	04
2.0 FSI	110	BLX	09/04 → 06/08	**CT6KMR**		Copper	0.8	04
	110	BVZ	09/04 → 06/08	**CT6KMR**		Copper	0.8	04
	110	BVY	09/04 → 06/08	**CT6KMR**		Copper	0.8	04
	110	BLR	09/04 → 06/08	**CT6KMR**		Copper	0.8	04
	110	BLY	09/04 → 06/08	**CT6KMR**		Copper	0.8	04
	110	AXW	09/04 → 06/08	**CT6KMR**		Copper	0.8	04
	110	BMB	09/04 → 06/08	**CT6KMR**		Copper	0.8	04
A4 (8D2, B5)								
1.6	74	AHL	11/94 → 10/00	**YJT6KMR**		Copper	1.0	04
	74	ADP	11/94 → 10/00	**YJT6KMR**		Copper	1.0	04
	74	ARM	11/94 → 10/00	**YJT6KMR**		Copper	1.0	04
	74	ANA	11/94 → 10/00	**YJT6KMR**		Copper	1.0	04
	75	ALZ	07/00 → 11/00	**YJT6KMR**		Copper	1.0	04
1.8	85	AFY	04/95 → 11/00	**YJT6KMR**		Copper	1.0	04
	92	APT	01/95 → 11/00	**YJT6KMR**		Copper	1.0	04
	92	ADR	01/95 → 11/00	**YJT6KMR**		Copper	1.0	04
	92	AVV	01/95 → 11/00	**YJT6KMR**		Copper	1.0	04
	92	ARG	01/95 → 11/00	**YJT6KMR**		Copper	1.0	04

	kW					CORE		QTY
AUDI								
A4 (8D2, B5)								
1.8 quattro	85	AFY	07/95 → 11/00	**YJT6KMR**		Copper	1.0	04
	92	ARG	01/95 → 11/00	**YJT6KMR**		Copper	1.0	04
	92	APT	01/95 → 11/00	**YJT6KMR**		Copper	1.0	04
	92	ADR	01/95 → 11/00	**YJT6KMR**		Copper	1.0	04
1.8 T	110	ARK	01/95 → 11/00	**YJT6KMR**		Copper	1.0	04
	110	AEB	01/95 → 11/00	**YJT6KMR**		Copper	1.0	04
	110	AWT	01/95 → 11/00	**YJT6KMR**		Copper	1.0	04
	110	ANB	01/95 → 11/00	**YJT6KMR**		Copper	1.0	04
	110	APU	01/95 → 11/00	**YJT6KMR**		Copper	1.0	04
2.4	120	AMM	08/97 → 11/00	**D6KMR**		Copper	0.9	06
	120	AJG	08/97 → 11/00	**D6KMR**		Copper	0.9	06
	120	APZ	08/97 → 11/00	**D6KMR**		Copper	0.9	06
	121	APS	03/97 → 11/00	**D6KMR**		Copper	0.9	06
	121	AGA	03/97 → 11/00	**D6KMR**		Copper	0.9	06
	121	ALF	03/97 → 11/00	**D6KMR**		Copper	0.9	06
	121	AML	03/97 → 11/00	**D6KMR**		Copper	0.9	06
	121	ARJ	03/97 → 11/00	**D6KMR**		Copper	0.9	06
2.4 quattro	120	APZ	08/97 → 11/00	**D6KMR**		Copper	0.9	06
	121	ALF	03/97 → 11/00	**D6KMR**		Copper	0.9	06
	121	AML	03/97 → 11/00	**D6KMR**		Copper	0.9	06
	121	ARJ	03/97 → 11/00	**D6KMR**		Copper	0.9	06
	121	APS	03/97 → 11/00	**D6KMR**		Copper	0.9	06
	121	AGA	03/97 → 11/00	**D6KMR**		Copper	0.9	06
2.6	110	ABC	01/95 → 11/00	**YJT6KMR**		Copper	1.0	06
2.6 quattro	110	ABC	01/95 → 11/00	**YJT6KMR**		Copper	1.0	06
2.8	128	AAH	09/95 → 07/97	**YJT6KMR**		Copper	1.0	06
	142	ACK	10/96 → 11/00	**D6KMR**		Copper	0.9	06
	142	ALG	10/96 → 11/00	**D6KMR**		Copper	0.9	06
	142	AMX	10/96 → 11/00	**D6KMR**		Copper	0.9	06
	142	APR	10/96 → 11/00	**D6KMR**		Copper	0.9	06
	142	AQD	10/96 → 11/00	**D6KMR**		Copper	0.9	06
	142	AHA	10/96 → 11/00	**D6KMR**		Copper	0.9	06
2.8 quattro	128	AAH	01/95 → 07/97	**YJT6KMR**		Copper	1.0	06
	142	AHA	10/96 → 08/01	**D6KMR**		Copper	0.9	06
	142	ACK	10/96 → 08/01	**D6KMR**		Copper	0.9	06
	142	ALG	10/96 → 08/01	**D6KMR**		Copper	0.9	06
	142	AMX	10/96 → 08/01	**D6KMR**		Copper	0.9	06
	142	APR	10/96 → 08/01	**D6KMR**		Copper	0.9	06
	142	AQD	10/96 → 08/01	**D6KMR**		Copper	0.9	06
A4 (8E2, B6)								
1.6	75	ALZ	11/00 → 12/04	**YJT6KMR**		Copper	1.0	04
2.4	120	AMM	09/01 → 12/04	**D6KMR**		Copper	0.9	06
	125	BDV	09/01 → 12/04	**D6KMR**		Copper	0.9	06

	kW					CORE		QTY
AUDI								
A4 (8E2, B6)								
3.0	160	BBJ	04/01 → 12/04	**D6KMR**		Copper	0.9	06
	162	AVK	11/00 → 12/04	**D6KMR**	→ 06/02	Copper	0.9	06
	162	ASN	11/00 → 12/04	**D6KMR**	→ 06/02	Copper	0.9	06
3.0 30V	160	BBJ	04/01 → 12/04	**D6KMR**		Copper	0.9	06
3.0 quattro	160	BBJ	04/01 → 12/04	**D6KMR**		Copper	0.9	06
	162	ASN	11/00 → 12/04	**D6KMR**		Copper	0.9	06
	162	AVK	11/00 → 12/04	**D6KMR**		Copper	0.9	06
S4 quattro	253	BBK	03/03 → 12/04	**YJT6KMR**		Copper	1.0	08
A4 (8E5, B6)								
1.6	75	ALZ	09/01 → 12/04	**YJT6KMR**		Copper	1.0	04
2.4	120	AMM	09/01 → 12/04	**D6KMR**		Copper	0.9	06
	125	BDV	09/01 → 12/04	**D6KMR**		Copper	0.9	06
3.0	160	BBJ	04/01 → 12/04	**D6KMR**		Copper	0.9	06
	162	ASN	09/01 → 12/04	**D6KMR**		Copper	0.9	06
3.0 quattro	160	BBJ	04/01 → 12/04	**D6KMR**		Copper	0.9	06
	162	ASN	09/01 → 12/04	**D6KMR**	→ 06/02	Copper	0.9	06
	162	AVK	09/01 → 12/04	**D6KMR**	→ 06/02	Copper	0.9	06
S4 quattro	253	BBK	03/03 → 12/04	**YJT6KMR**		Copper	1.0	08
A4 (8EC, B7)								
1.6	75	ALZ	11/04 → 06/08	**YJT6KMR**		Copper	1.0	04
3.0	160	BBJ	11/04 → 05/06	**D6KMR**		Copper	0.9	06
3.0 30V	160	BBJ	11/04 → 05/06	**D6KMR**		Copper	0.9	06
3.0 quattro	160	BBJ	11/04 → 07/06	**D6KMR**		Copper	0.9	06
S4 quattro	253	BHF	11/04 → 06/08	**YJT6KMR**		Copper	1.0	08
	253	BBK	11/04 → 06/08	**YJT6KMR**		Copper	1.0	08
A4 (8ED, B7)								
1.6	75	ALZ	11/04 → 06/08	**YJT6KMR**		Copper	1.0	04
3.0	160	BBJ	11/04 → 05/06	**D6KMR**		Copper	0.9	06
3.0 30V	160	BBJ	11/04 → 05/06	**D6KMR**		Copper	0.9	06
3.0 quattro	160	BBJ	11/04 → 07/06	**D6KMR**		Copper	0.9	06
S4 quattro	253	BBK	11/04 → 06/08	**YJT6KMR**		Copper	1.0	08
A4 (8H7, B6, 8HE, B7)								
2.4	120	AMM	04/02 → 12/05	**D6KMR**		Copper	0.9	06
	125	BDV	04/02 → 12/05	**D6KMR**		Copper	0.9	06
3.0	162	ASN	04/02 → 12/05	**D6KMR**		Copper	0.9	06
3.0 quattro	162	ASN	05/03 → 12/05	**D6KMR**		Copper	0.9	06
S4 quattro	253	BBK	03/04 → 03/09	**YJT6KMR**		Copper	1.0	08
A6 (4A, C4)								
1.8	92	ADR	12/95 → 10/97	**YJT6KMR**		Copper	1.0	04
1.8 quattro	92	ADR	12/95 → 10/97	**YJT6KMR**		Copper	1.0	04
2.0	74	AAE	06/94 → 10/97	**CJT6FMR**		Copper	0.8	04
	85	ABK	06/94 → 10/97	**CJT6FMR**		Copper	0.8	04
2.6	102	ACZ	06/94 → 10/97	**YJT6KMR**		Copper	1.0	06
	110	ABC	06/94 → 10/97	**YJT6KMR**		Copper	1.0	06

	kW					CORE		QTY
AUDI								
A6 (4A, C4)								
2.6 quattro	110	ABC	06/94 → 10/97	**YJT6KMR**		Copper	1.0	06
2.8	128	AAH	06/94 → 10/97	**YJT6KMR**		Copper	1.0	06
	128	AFC	06/94 → 10/97	**YJT6KMR**		Copper	1.0	06
	128	AEJ	06/94 → 10/97	**YJT6KMR**		Copper	1.0	06
	142	ACK	12/95 → 10/97	**D6KMR**		Copper	0.9	06
2.8 quattro	128	AEJ	06/94 → 10/97	**YJT6KMR**		Copper	1.0	06
	128	AAH	06/94 → 10/97	**YJT6KMR**		Copper	1.0	06
	142	ACK	12/95 → 10/97	**D6KMR**		Copper	0.9	06
A6 (4B2, C5)								
1.8	85	AFY	05/97 → 01/05	**YJT6KMR**		Copper	1.0	04
	92	ANQ	07/97 → 01/05	**YJT6KMR**		Copper	1.0	04
	92	ARH	07/97 → 01/05	**YJT6KMR**		Copper	1.0	04
	92	AQE	07/97 → 01/05	**YJT6KMR**		Copper	1.0	04
	92	AJP	07/97 → 01/05	**YJT6KMR**		Copper	1.0	04
2.0	96	ALT	08/10 → 01/05	**YJT6KMR**		Copper	1.0	04
2.4	100	ARN	07/98 → 01/05	**YJT6KMR**		Copper	1.0	06
	100	ALW	07/98 → 01/05	**YJT6KMR**		Copper	1.0	06
	100	ASM	07/98 → 01/05	**YJT6KMR**		Copper	1.0	06
	115	APC	02/97 → 01/05	**D6KMR**		Copper	0.9	06
	120	AMM	02/97 → 01/05	**D6KMR**		Copper	0.9	06
	120	AJG	02/97 → 01/05	**D6KMR**		Copper	0.9	06
	120	APZ	02/97 → 01/05	**D6KMR**		Copper	0.9	06
	121	ALF	02/97 → 01/05	**D6KMR**		Copper	0.9	06
	121	AGA	02/97 → 01/05	**D6KMR**		Copper	0.9	06
	121	ARJ	02/97 → 01/05	**D6KMR**		Copper	0.9	06
	121	APS	02/97 → 01/05	**D6KMR**		Copper	0.9	06
	121	AML	02/97 → 01/05	**D6KMR**		Copper	0.9	06
	125	BDV	08/10 → 01/05	**D6KMR**		Copper	0.9	06
2.4 quattro	115	APC	08/98 → 07/99	**D6KMR**		Copper	0.9	06
	120	AJG	02/97 → 01/05	**D6KMR**		Copper	0.9	06
	120	APZ	02/97 → 01/05	**D6KMR**		Copper	0.9	06
	121	APS	02/97 → 01/05	**D6KMR**		Copper	0.9	06
	121	ARJ	02/97 → 01/05	**D6KMR**		Copper	0.9	06
	121	ALF	02/97 → 01/05	**D6KMR**		Copper	0.9	06
	121	AGA	02/97 → 01/05	**D6KMR**		Copper	0.9	06
	121	AML	02/97 → 01/05	**D6KMR**		Copper	0.9	06
	125	BDV	08/10 → 01/05	**D6KMR**		Copper	0.9	06
2.4 V6	121	ALF	02/97 → 01/05	**D6KMR**		Copper	0.9	06
	121	AGA	02/97 → 01/05	**D6KMR**		Copper	0.9	06
	121	AML	02/97 → 01/05	**D6KMR**		Copper	0.9	06
	121	ARJ	02/97 → 01/05	**D6KMR**		Copper	0.9	06
	121	APS	02/97 → 01/05	**D6KMR**		Copper	0.9	06

	kW					CORE		QTY
AUDI								
A6 (4B2, C5)								
2.8	132	AGE	10/97 → 05/00	**D6KMR**		Copper	0.9	06
	140	ATX	07/99 → 01/05	**D6KMR**		Copper	0.9	06
	140	BBG	07/99 → 01/05	**D6KMR**		Copper	0.9	06
	142	AMX	02/97 → 01/05	**D6KMR**		Copper	0.9	06
	142	AHA	02/97 → 01/05	**D6KMR**		Copper	0.9	06
	142	ALG	02/97 → 01/05	**D6KMR**		Copper	0.9	06
	142	ACK	02/97 → 01/05	**D6KMR**		Copper	0.9	06
	142	APR	02/97 → 01/05	**D6KMR**		Copper	0.9	06
	142	AQD	02/97 → 01/05	**D6KMR**		Copper	0.9	06
2.8 quattro	132	AGE	01/98 → 04/00	**D6KMR**		Copper	0.9	06
	140	ATX	07/99 → 05/01	**D6KMR**		Copper	0.9	06
	142	APR	02/97 → 01/05	**D6KMR**		Copper	0.9	06
	142	AQD	02/97 → 01/05	**D6KMR**		Copper	0.9	06
	142	AMX	02/97 → 01/05	**D6KMR**		Copper	0.9	06
	142	AHA	02/97 → 01/05	**D6KMR**		Copper	0.9	06
	142	ALG	02/97 → 01/05	**D6KMR**		Copper	0.9	06
	142	ACK	02/97 → 01/05	**D6KMR**		Copper	0.9	06
3.0	162	ASN	08/10 → 01/05	**D6KMR**		Copper	0.9	06
3.0 quattro	160	BBJ	06/01 → 07/04	**D6KMR**		Copper	0.9	06
	162	ASN	08/10 → 01/05	**D6KMR**		Copper	0.9	06
S6 quattro	250	ANK	09/99 → 01/05	**D6KMR**		Copper	0.9	08
	250	AQJ	09/99 → 01/05	**D6KMR**		Copper	0.9	08
A6 (4F2, C6)								
4.2 quattro	246	BAT	05/04 → 05/06	**YJT6KMR**		Copper	1.0	08
	246	BAT	03/05 → 05/06	**YJT6KMR**		Copper	1.0	08
A8 (4D2, 4D8)								
2.8	120	AEJ	07/95 → 03/96	**CT5KMMR**		Copper	0.8	06
	128	AAH	03/94 → 03/96	**YJT6KMR**		Copper	1.0	06
	142	AQD	04/96 → 09/02	**D6KMR**		Copper	0.9	06
	142	ACK	04/96 → 09/02	**D6KMR**		Copper	0.9	06
	142	ALG	04/96 → 09/02	**D6KMR**		Copper	0.9	06
	142	AMX	04/96 → 09/02	**D6KMR**		Copper	0.9	06
	142	APR	04/96 → 09/02	**D6KMR**		Copper	0.9	06
2.8 quattro	120	AEJ	07/95 → 03/96	**CT5KMMR**		Copper	0.8	06
	128	AAH	03/94 → 03/96	**YJT6KMR**		Copper	1.0	06
	142	AQD	04/96 → 09/02	**D6KMR**		Copper	0.9	06
	142	AMX	04/96 → 09/02	**D6KMR**		Copper	0.9	06
	142	APR	04/96 → 09/02	**D6KMR**		Copper	0.9	06
	142	ACK	04/96 → 09/02	**D6KMR**		Copper	0.9	06
S 8 quattro	265	AVP	06/99 → 09/02	**D6KMR**		Copper	0.9	08
	265	AQH	06/99 → 09/02	**D6KMR**		Copper	0.9	08

	kW					CORE		QTY
AUDI								
A8 (4E_)								
3.0	160	BBJ	07/03 → 05/06	**D6KMR**		Copper	0.9	06
	162	ASN	07/03 → 05/05	**D6KMR**		Copper	0.9	06
3.7 quattro	206	BFL	10/02 → 05/06	**YJT6KMR**		Copper	1.0	08
4.2 quattro	246	BFM	10/02 → 07/10	**YJT6KMR**	→ 05/06	Copper	1.0	08
ALLROAD (4BH, C5)								
4.2 V8 quattro	220	BAS	07/02 → 08/05	**YJT6KMR**		Copper	1.0	08
CABRIOLET (8G7, B4)								
1.8	92	ADR	01/97 → 08/00	**YJT6KMR**		Copper	1.0	04
2.0 E	85	ABK	01/93 → 07/98	**CJT6FMR**		Copper	0.8	04
2.6	102	ACZ	05/95 → 08/00	**YJT6KMR**		Copper	1.0	06
	110	ABC	06/93 → 08/00	**YJT6KMR**		Copper	1.0	06
2.8	128	AAH	11/92 → 08/00	**YJT6KMR**		Copper	1.0	06
COUPE (89, 8B)								
2.0	83	3A	05/89 → 03/90	**CJT6FMR**		Copper	0.8	04
	85	ABK	05/89 → 12/96	**CJT6FMR**		Copper	0.8	04
	85	AAD	05/89 → 12/96	**CJT6FMR**		Copper	0.8	04
2.3	98	NG	03/90 → 12/96	**CJT6FMR**		Copper	0.8	05
	100	NG	10/88 → 07/94	**CJT6FMR**		Copper	0.8	05
2.3 quattro	100	NG	11/88 → 12/92	**CJT6FMR**		Copper	0.8	05
2.6	110	ABC	08/92 → 12/96	**YJT6KMR**		Copper	1.0	06
2.6 quattro	110	ABC	08/92 → 12/96	**YJT6KMR**		Copper	1.0	06
2.8	128	AAH	09/91 → 12/96	**YJT6KMR**		Copper	1.0	06
2.8 quattro	128	AAH	08/91 → 12/96	**YJT6KMR**		Copper	1.0	06
TT (8N3)								
1.8 T	132	ATC	10/98 → 06/06	**YJT6KMR**	→ 01/99	Copper	1.0	04
	132	APP	10/98 → 06/06	**YJT6KMR**	→ 01/99	Copper	1.0	04
	132	AUQ	10/98 → 06/06	**YJT6KMR**	→ 01/99	Copper	1.0	04
	132	AJQ	10/98 → 06/06	**YJT6KMR**	→ 01/99	Copper	1.0	04
1.8 T quattro	132	AUQ	10/98 → 06/06	**YJT6KMR**	→ 01/99	Copper	1.0	04
	132	ARY	10/98 → 06/06	**YJT6KMR**	→ 01/99	Copper	1.0	04
	132	AJQ	10/98 → 06/06	**YJT6KMR**	→ 01/99	Copper	1.0	04
	165	BAM	10/98 → 06/06	**YJT6KMR**	→ 01/99	Copper	1.0	04
	165	APX	10/98 → 06/06	**YJT6KMR**	→ 01/99	Copper	1.0	04
AUSTIN								
MINI								
1000 Mayfair Sport	30	99 HD81	09/88 → 06/93	**CW7LPR**		Nickel	0.8	04
	30	99 HD81	09/88 → 06/93	**CT6FMR**		Copper	0.8	04

	kW					CORE		QTY
AUTOBIANCHI								
Y10								
1.0 Cat	33	156A2.246	10/87 → 10/95	**7LPR**	01/89 → 09/92	Nickel	0.8	04
	33	156A2.246	10/87 → 10/95	**CT6KMR**	01/89 → 09/92	Copper	0.8	04
1.1	42	156C.000	06/89 → 10/95	**7LPR**	→ 12/94	Nickel	0.8	04
	42	156C.000	06/89 → 10/95	**CT6KMR**	→ 12/94	Copper	0.8	04
1.1 4WD	42	156C.000	06/89 → 10/95	**7LPR**	→ 09/92	Nickel	0.8	04
	42	156C.000	06/89 → 10/95	**CT6KMR**	→ 09/92	Copper	0.8	04
1.1 i.e. Cat	42	156C.046	09/90 → 10/95	**7LPR**		Nickel	0.8	04
	42	156C.046	09/90 → 10/95	**CT6KMR**		Copper	0.8	04
1.3 i.e. GT	54	146A5.046	06/89 → 10/95	**CT6FMR**	→ 09/92	Copper	0.8	04
	57	156B.000	06/89 → 10/95	**CW7LPR**	→ 09/92	Nickel	0.8	04
BEDFORD								
MIDI								
2.0	62	4ZC1	06/88 → 08/92	**CT6FMR**		Copper	0.8	04
2.0 4WD	62	4ZC1	06/88 → 08/92	**CW7LPR**		Nickel	0.8	04
BENTLEY								
ARNAGE								
4.4 V8	260	M62448S3	04/98 → 10/09	**D6KMR**		Copper	0.9	08
CONTINENTAL								
6.7	160	L 410 I	10/89 → 04/95	**CT5FMR**		Copper	0.8	08
	166	L 410 I	10/89 → 09/92	**CT5FMR**		Copper	0.8	08
6.7 Turbo R	235	L 410 IT	10/91 → 09/95	**CT5FMR**		Copper	0.8	08
6.75 V8 R	265	L 410 IT	10/91 → 08/99	**CW7LPR**		Nickel	0.8	08
	265	L 410 IT	10/91 → 08/99	**CT6FMR**		Copper	0.8	08
TURBO R								
6.7	235	L 410 IT	10/88 → 02/98	**CT5FMR**		Copper	0.8	08
	287	L 410 IT	09/94 → 02/98	**CT5FMR**		Copper	0.8	08
6.7 S	298	L 410 IT	01/94 → 12/95	**CW7LPR**		Nickel	0.8	08
	298	L 410 IT	01/94 → 12/95	**CT6FMR**		Copper	0.8	08
BMW								
1 (E81)								
116 i	85	N45 B16 A	03/07 → 09/12	**D6KMR**		Copper	0.9	04
	85	N45 B16 A	11/03 → 09/12	**D6KMR**		Copper	0.9	04
3 (E30)								
316 i	73	M40 B16 (164E1)	09/87 → 06/91	**CT5KMR**		Copper	0.8	04
	75	M40 B16 (164E1)	07/88 → 06/91	**D6KMR**		Copper	0.9	04
	75	M10 B18 (184KA)	08/87 → 08/88	**CT5FMR**		Copper	0.8	04
318 i	83	M40 B18 (184E1)	09/87 → 06/91	**CT5KMR**		Copper	0.8	04
	83	M40 B18 (184E1)	04/89 → 06/94	**CT5KMMR**		Copper	0.8	04
	85	M40 B18 (184E1)	09/87 → 06/91	**CT5KMR**		Copper	0.8	04
318 is	100	M42 B18 (184S1)	09/89 → 08/91	**D6KMR**		Copper	0.9	04

	kW					CORE		QTY
BMW								
3 (E36)								
316 i	73	M40 B16 (164E1)	09/90 → 09/93	**D6KMR**		Copper	0.9	04
	75	M43 B16 (164E2)	07/93 → 02/98	**D6KMR**	→ 08/93	Copper	0.9	04
	77	M43 B19 (194E1)	12/98 → 08/00	**D6KMR**		Copper	0.9	04
316 i Exclusive	73	M40 B16 (164E1)	09/90 → 09/93	**D6KMR**		Copper	0.9	04
	75	M43 B16 (164E2)	07/93 → 02/98	**D6KMR**	→ 08/93	Copper	0.9	04
318 i	83	M40 B18 (184E1)	12/90 → 10/93	**D6KMR**		Copper	0.9	04
	85	M43 B18 (184E2)	10/93 → 02/98	**D6KMR**		Copper	0.9	04
	103	M44 B19 (194S1)	09/95 → 02/98	**D6KMR**		Copper	0.9	04
318 is	103	M42 B18 (184S1)	03/93 → 02/98	**D6KMR**		Copper	0.9	04
	103	M44 B19 (194S1)	09/95 → 02/98	**D6KMR**		Copper	0.9	04
	142	M52 B28 (286S1)	01/95 → 04/99	**D6KMR**		Copper	0.9	06
318 is M Sport	103	M42 B18 (184S1)	03/93 → 02/98	**D6KMR**		Copper	0.9	04
318 ti	103	M42 B18 (184S1)	11/94 → 08/95	**D6KMR**		Copper	0.9	04
	103	M44 B19 (194S1)	07/95 → 08/00	**D6KMR**		Copper	0.9	04
320 i	110	M50 B20 (206S1)	09/90 → 02/98	**D6KMR**		Copper	0.9	06
	110	M50 B20 (206S2)	09/90 → 02/98	**D6KMR**		Copper	0.9	06
	110	M52 B20 (206S3)	09/90 → 02/98	**D6KMR**		Copper	0.9	06
323 i	125	M52 B25 (256S3)	03/95 → 02/98	**D6KMR**	07/97 →	Copper	0.9	06
323 i 2.5	125	M52 B25 (256S3)	03/95 → 02/98	**D6KMR**	07/97 →	Copper	0.9	06
323 is	125	M52 B25 (256S3)	03/95 → 04/99	**D6KMR**	07/97 →	Copper	0.9	06
323 ti	125	M52 B25 (256S3)	08/97 → 08/00	**D6KMR**		Copper	0.9	06
325 i	141	M50 B25 (256S1)	09/90 → 09/95	**D6KMR**		Copper	0.9	06
	141	M50 B25 (256S2)	09/90 → 09/95	**D6KMR**		Copper	0.9	06
325 is	141	M50 B25 (256S1)	03/92 → 04/99	**D6KMR**		Copper	0.9	06
	141	M50 B25 (256S2)	03/92 → 04/99	**D6KMR**		Copper	0.9	06
328 i	142	M52 B28 (286S1)	01/95 → 02/98	**D6KMR**		Copper	0.9	06
M3	210	S50 B30 (306S1)	08/94 → 09/95	**CT7DKMR**		Copper	0.8	06
M3 3.0	210	S50 B30 (306S1)	08/94 → 09/95	**CT7DKMR**		Copper	0.8	06
	217	S50 B30 (306S1)	01/95 → 10/95	**CT7DKMR**		Copper	0.8	06
M3 3.2	236	S50 B32 (326S1)	09/95 → 02/98	**CT7DKMR**		Copper	0.8	06
3 (E46)								
316 Ci	77	M43 B16 (164E3)	04/00 → 07/06	**D6KMR**		Copper	0.9	04
	85	N45 B16 A	06/02 → 07/06	**D6KMR**		Copper	0.9	04
316 i	77	M43 B16 (164E3)	04/00 → 02/05	**D6KMR**		Copper	0.9	04
	77	M43 B19 (194E1)	09/98 → 02/05	**D6KMR**		Copper	0.9	04
	85	N40 B16 A	06/02 → 02/05	**D6KMR**	→ 02/04	Copper	0.9	04
	85	N42 B18 A	02/02 → 02/05	**D6KMR**	→ 03/04	Copper	0.9	04
	85	N45 B16 A	06/02 → 02/05	**D6KMR**	→ 02/04	Copper	0.9	04
	85	N46 B18 A	02/02 → 02/05	**D6KMR**	→ 03/04	Copper	0.9	04
316 ti	77	N40 B16 A	06/02 → 02/05	**D6KMR**		Copper	0.9	04
	85	N40 B16 A	06/02 → 02/05	**D6KMR**	→ 02/04	Copper	0.9	04
	85	N45 B16 A	06/02 → 02/05	**D6KMR**	→ 02/04	Copper	0.9	04

	kW					CORE		QTY
BMW								
3 (E46)								
318 Ci	87	M43 B19 (194E1)	11/99 → 09/01	**D6KMR**		Copper	0.9	04
	105	N42 B20 A	09/01 →	**D6KMR**	→ 02/04	Copper	0.9	04
	105	N46 B20 A	09/01 →	**D6KMR**	→ 02/04	Copper	0.9	04
318 i	85	M43 B19 (194E1)	10/99 → 09/01	**D6KMR**		Copper	0.9	04
	87	M43 B19 (194E1)	02/98 → 09/01	**D6KMR**		Copper	0.9	04
	105	N42 B20 A	09/01 → 02/05	**D6KMR**	→ 02/04	Copper	0.9	04
	105	N46 B20 A	09/01 → 02/05	**D6KMR**	→ 02/04	Copper	0.9	04
318 ti	105	N42 B20 A	09/01 → 02/05	**D6KMR**	→ 02/04	Copper	0.9	04
	105	N46 B20 A	09/01 → 02/05	**D6KMR**	→ 02/04	Copper	0.9	04
320 Ci	110	M52 B20 (206S4)	08/99 → 09/00	**D6KMR**		Copper	0.9	06
	120	M54 B22 (226S1)	01/06 → 12/07	**D6KMR**		Copper	0.9	06
	125	M54 B22 (226S1)	09/00 →	**D6KMR**		Copper	0.9	06
320 i	110	M52 B20 (206S4)	03/98 → 09/00	**D6KMR**		Copper	0.9	06
	125	M54 B22 (226S1)	09/00 → 02/05	**D6KMR**		Copper	0.9	06
323 Ci	125	M52 B25 (256S4)	04/00 → 09/00	**D6KMR**		Copper	0.9	06
323 i	125	M52 B25 (256S4)	03/98 → 09/00	**D6KMR**		Copper	0.9	06
323 ti	125	M52 B25 (256S4)	03/98 → 09/00	**D6KMR**		Copper	0.9	06
325 Ci	141	M54 B25 (256S5)	09/00 →	**D6KMR**		Copper	0.9	06
325 i	141	M54 B25 (256S5)	09/00 → 02/05	**D6KMR**		Copper	0.9	06
325 ti	141	M54 B25 (256S5)	06/01 → 02/05	**D6KMR**		Copper	0.9	06
325 xi	141	M54 B25 (256S5)	09/00 → 02/05	**D6KMR**		Copper	0.9	06
328 Ci	142	M52 B28 (286S2)	04/99 → 06/00	**D6KMR**		Copper	0.9	06
328 i	141	M54 B25 (256S5)	09/00 → 02/05	**D6KMR**		Copper	0.9	06
	142	M52 B28 (286S2)	02/98 → 06/00	**D6KMR**		Copper	0.9	06
330 Ci	170	M54 B30 (306S3)	06/00 →	**D6KMR**		Copper	0.9	06
330 i	170	M54 B30 (306S3)	06/00 → 02/05	**D6KMR**		Copper	0.9	06
330 i M Sport	170	M54 B30 (306S3)	06/00 → 02/05	**D6KMR**		Copper	0.9	06
330 xi	170	M54 B30 (306S3)	06/00 → 02/05	**D6KMR**		Copper	0.9	06
3 (E90)								
316 i	85	N45 B16 A	02/06 → 12/11	**D6KMR**		Copper	0.9	04
320 si	127	N45 B20 A	05/06 → 12/11	**D6KMR**		Copper	0.9	04
5 (E34)								
518 i	83	M40 B18 (184E1)	08/89 → 09/95	**D6KMR**	→ 10/92	Copper	0.9	04
	85	M43 B18 (184E2)	08/89 → 09/95	**D6KMR**		Copper	0.9	04
520 i	110	M50 B20 (206S1)	11/91 → 01/97	**D6KMR**		Copper	0.9	06
	110	M50 B20 (206S2)	11/91 → 01/97	**D6KMR**		Copper	0.9	06
520 i 24V	110	M50 B20 (206S1)	09/89 → 09/95	**D6KMR**		Copper	0.9	06
	110	M50 B20 (206S2)	09/89 → 09/95	**D6KMR**		Copper	0.9	06
525 i	125	M20 B25 (256K1)	01/88 → 08/91	**CT6FMR**		Copper	0.8	06
	125	M20 B25 (256K1)	01/88 → 08/91	**CW7LPR**		Nickel	0.8	06
	141	M50 B25 (256S1)	11/91 → 01/97	**D6KMR**		Copper	0.9	06
	141	M50 B25 (256S2)	11/91 → 01/97	**D6KMR**		Copper	0.9	06
525 i 24V	141	M50 B25 (256S2)	09/89 → 09/95	**D6KMR**		Copper	0.9	06

	kW					CORE		QTY
BMW								
5 (E34)								
525iT	141	M50 B25 (256S1)	11/91 → 01/97	**D6KMR**		Copper	0.9	06
	141	M50 B25 (256S2)	11/91 → 01/97	**D6KMR**		Copper	0.9	06
525 ix	141	M50 B25 (256S1)	02/92 → 01/97	**D6KMR**		Copper	0.9	06
	141	M50 B25 (256S2)	02/92 → 01/97	**D6KMR**		Copper	0.9	06
525 iX 24V	141	M50 B25 (256S1)	10/91 → 09/95	**D6KMR**		Copper	0.9	06
	141	M50 B25 (256S2)	10/91 → 09/95	**D6KMR**		Copper	0.9	06
530 i V8	160	M60 B30 (308S1)	09/92 → 09/95	**D6KMR**		Copper	0.9	08
540 i	210	M60 B40 (408S1)	09/93 → 01/97	**D6KMR**		Copper	0.9	08
540 i V8	210	M60 B40 (408S1)	09/92 → 09/95	**D6KMR**		Copper	0.9	08
M5	250	S38 B38 (386S1)	03/92 → 09/95	**CT7DKMR**		Copper	0.8	06
5 (E39)								
520 i	100	M52 B20 (206S3)	04/99 → 06/03	**D6KMR**		Copper	0.9	06
	110	M52 B20 (206S3)	01/96 → 09/00	**D6KMR**		Copper	0.9	06
	125	M54 B22 (226S1)	09/00 → 06/03	**D6KMR**		Copper	0.9	06
523 i	125	M52 B25 (256S3)	11/95 → 09/00	**D6KMR**		Copper	0.9	06
525 i	141	M54 B25 (256S5)	09/00 → 06/03	**D6KMR**		Copper	0.9	06
528 i	142	M52 B28 (286S1)	11/95 → 09/00	**D6KMR**		Copper	0.9	06
	142	M52 B28 (286S2)	11/95 → 09/00	**D6KMR**		Copper	0.9	06
530 i	170	M54 B30 (306S3)	09/00 → 06/03	**D6KMR**		Copper	0.9	06
535 i	173	M62 B35 (358S1)	04/96 → 03/99	**D6KMR**		Copper	0.9	08
	173	M62 B35 (358S2)	04/96 → 03/99	**D6KMR**		Copper	0.9	08
	180	M62 B35 (358S2)	04/99 → 06/03	**D6KMR**		Copper	0.9	08
540 i	210	M62 B44 (448S2)	04/96 → 06/03	**D6KMR**		Copper	0.9	08
	210	M62 B44 (448S1)	04/96 → 06/03	**D6KMR**		Copper	0.9	08
M5	294	S62 B50 (508S1)	10/98 → 06/03	**D6KMR**		Copper	0.9	08
5 (E60)								
520 i	125	M54 B22 (226S1)	07/03 → 03/10	**D6KMR**		Copper	0.9	06
525 i	141	M54 B25 (256S5)	09/03 → 03/10	**D6KMR**		Copper	0.9	06
530 i	170	M54 B30 (306S3)	07/03 → 03/10	**D6KMR**		Copper	0.9	06
545 i	245	N62 B44 A	09/03 → 03/10	**D6KMR**		Copper	0.9	08
5 (E61)								
525 i	141	M54 B25 (256S5)	06/04 →	**D6KMR**		Copper	0.9	06
545 i	245	N62 B44 A	06/04 →	**D6KMR**		Copper	0.9	08
6 (E63)								
645 Ci	245	N62 B44 A	01/04 →	**D6KMR**		Copper	0.9	08
6 (E64)								
645 Ci	245	N62 B44 A	04/04 →	**D6KMR**		Copper	0.9	08
7 (E32)								
730 i,iL V8	160	M60 B30 (308S1)	04/92 → 09/94	**D6KMR**		Copper	0.9	08
740 i,iL V8	210	M60 B40 (408S1)	04/92 → 09/94	**D6KMR**		Copper	0.9	08
750 i,iL V12	220	M70 B50 (5012A)	09/87 → 09/94	**CT5KMR**		Copper	0.8	12

	kW					CORE		QTY
BMW								
7 (E38)								
728 i, iL	142	M52 B28 (286S1)	08/95 → 11/01	**D6KMR**		Copper	0.9	06
	142	M52 B28 (286S2)	08/95 → 11/01	**D6KMR**		Copper	0.9	06
728i X	142	M52 B28 (286S1)	11/95 → 09/01	**D6KMR**		Copper	0.9	06
730 i, iL	155	M60 B30 (308S1)	10/94 → 11/01	**D6KMR**		Copper	0.9	08
	160	M60 B30 (308S1)	10/94 → 11/01	**D6KMR**		Copper	0.9	08
735 i, iL	173	M62 B35 (358S1)	01/96 → 11/01	**D6KMR**		Copper	0.9	08
740 i, iL	210	M60 B40 (408S1)	10/94 → 11/01	**D6KMR**		Copper	0.9	08
	210	M62 B44 (448S2)	01/96 → 11/01	**D6KMR**		Copper	0.9	08
	210	M62 B44 (448S1)	01/96 → 11/01	**D6KMR**		Copper	0.9	08
7 (E65, E66, E67)								
730 i, Li	170	M54 B30 (306S3)	03/03 →	**D6KMR**		Copper	0.9	06
735 i, Li	200	N62 B36 A	11/01 →	**D6KMR**		Copper	0.9	08
745 i, Li	245	N62 B44 A	11/01 →	**D6KMR**		Copper	0.9	08
760 i, Li	327	N73 B60 A	01/03 →	**D6KMR**	→ 10/08	Copper	0.9	12
8 (E31)								
840 Ci	210	M62 B44 (448S1)	01/96 → 12/99	**D6KMR**		Copper	0.9	08
	210	M60 B40 (408S1)	02/93 → 02/96	**D6KMR**		Copper	0.9	08
840 i	210	M60 B40 (408S1)	02/93 → 02/96	**D6KMR**		Copper	0.9	08
850 CSi	280	S70 B56 (56121)	04/93 → 12/96	**D6KMR**		Copper	0.9	12
	280	S70 B56 (56121)	04/93 → 12/96	**A5KMR**		Copper	1.1	12
850 i,Ci	220	M70 B50 (5012A)	04/90 → 10/94	**A5KMR**		Copper	1.1	12
X3 (E83)								
2.5 i	141	M54 B25 (256S5)	01/04 →	**D6KMR**		Copper	0.9	06
3.0 i xDrive	170	M54 B30 (306S3)	01/04 →	**D6KMR**		Copper	0.9	06
X5 (E53)								
3.0 i	163	M54 B30 (306S3)	05/00 → 12/06	**D6KMR**		Copper	0.9	06
	170	M54 B30 (306S3)	05/00 → 12/06	**D6KMR**		Copper	0.9	06
4.4 i	210	M62 B44 (448S2)	05/00 → 12/03	**D6KMR**	→ 08/03	Copper	0.9	08
	235	N62 B44	12/03 → 09/06	**D6KMR**		Copper	0.9	08
	235	N62 B44 A	12/03 → 09/06	**D6KMR**		Copper	0.9	08
4.6 is	255	M62 B46 (468S1)	02/02 → 12/03	**D6KMR**		Copper	0.9	08
Z3 (E36)								
1.8 i	85	M43 B18 (184E2)	10/95 → 10/98	**D6KMR**		Copper	0.9	04
1.9 i	85	M43 B19 (194E1)	01/99 → 01/03	**D6KMR**		Copper	0.9	04
	87	M43 B19 (194E1)	07/98 → 01/03	**D6KMR**		Copper	0.9	04
	103	M44 B19 (194S1)	10/95 → 03/99	**D6KMR**		Copper	0.9	04
2.0 i	110	M52 B20 (206S4)	04/99 → 01/03	**D6KMR**	→ 10/00	Copper	0.9	06
2.2 i	125	M54 B22 (226S1)	08/00 → 01/03	**D6KMR**		Copper	0.9	06
2.8 i	141	M52 B28 (286S1)	04/97 → 06/00	**D6KMR**		Copper	0.9	06
3.0 i	170	M54 B30 (306S3)	06/00 → 01/03	**D6KMR**		Copper	0.9	06
Z4 (E85)								
2.2 i	125	M54 B22 (226S1)	10/03 →	**D6KMR**		Copper	0.9	06
2.5 i	141	M54 B25 (256S5)	02/03 →	**D6KMR**		Copper	0.9	06
3.0 i	170	M54 B30 (306S3)	02/03 →	**D6KMR**		Copper	0.9	06

	kW					CORE		QTY
BMW								
Z8 (E52)								
4.9	294	S62 B50 (508S1)	06/00 → 06/03	**D6KMR**		Copper	0.9	08
CADILLAC								
BLS								
2.0 T Flexpower	147	Z 20 LER	12/07 →	**A5KMR**		Copper	1.1	04
CTS								
2.6	133	LY9	04/03 → 09/07	**YJT6KMR**	→ 01/04	Copper	1.0	06
3.2	160	LA3	03/02 → 09/07	**YJT6KMR**		Copper	1.0	06
CHEVROLET								
AVEO								
1.5	62	F15S3	05/05 →	**CW7LPR**		Nickel	0.8	04
	62	LX6	05/05 →	**CW7LPR**		Nickel	0.8	04
AVEO 2								
1.2	55	B12D1	04/08 →	**CT7DKMR**		Copper	0.8	04
	55	LMU	01/08 →	**CT7DKMR**		Copper	0.8	04
	62	LMU	04/08 →	**CT7DKMR**		Copper	0.8	04
	62	B12D1	01/08 →	**CT7DKMR**		Copper	0.8	04
1.2 LPG	62	B12D1	04/08 →	**CT7DKMR**		Copper	0.8	04
	62	LMU	01/09 →	**CT7DKMR**		Copper	0.8	04
1.4	69	L14	03/06 → 12/07	**CT6KMR11**		Copper	1.1	04
	69	F14D3	03/06 → 12/07	**CT6KMR11**		Copper	1.1	04
1.5	62	F15S3	05/05 →	**CT6FMR**		Copper	0.8	04
	62	LX6	05/05 →	**CT6FMR**		Copper	0.8	04
1.6	76	F16D3	05/05 →	**CT6KMR11**	→ 04/09	Copper	1.1	04
	76	LXV	05/05 →	**CT6KMR11**	→ 04/09	Copper	1.1	04
	77	A16DMS	09/03 →	**CT6KMR11**	→ 04/09	Copper	1.1	04
	77	LXT	09/03 →	**CT6KMR11**	→ 04/09	Copper	1.1	04
BEAT								
1.0	50	B10D1	03/10 →	**CT7DKMR**		Copper	0.8	04
1.2	60	LMU	03/10 →	**CT7DKMR**		Copper	0.8	04
	60	B12D1	03/10 →	**CT7DKMR**		Copper	0.8	04
1.2 LPG	60	B12D1	03/10 →	**CT7DKMR**		Copper	0.8	04
	60	LMU	03/10 →	**CT7DKMR**		Copper	0.8	04
CAPRICE CLASSIC								
5.7	138	LO5	10/91 → 09/93	**CT5KMMR11**		Copper	1.1	08
CAPTIVA								
2.4	100	Z 24 SED	06/06 →	**D6KMR**	→ 02/11	Copper	0.9	04
2.4 4WD	100	Z 24 SED	06/06 →	**D6KMR**	→ 02/11	Copper	0.9	04
CRUZE								
1.3	61	M13A	07/00 → 09/08	**CT6KMR11**		Copper	1.1	04
1.3 AWD	61	M13A	07/00 → 09/08	**CT6KMR11**		Copper	1.1	04

	kW					CORE		QTY
CHEVROLET								
CRUZE								
1.6	80	F16D3	05/09 →	**CT6KMR11**		Copper	1.1	04
	80	LXV	05/09 →	**CT6KMR11**		Copper	1.1	04
	80	LXT	05/09 →	**CT6KMR11**		Copper	1.1	04
1.8	103	LWE	11/09 →	**A5KMR**		Copper	1.1	04
	103	LUW	11/09 →	**A5KMR**		Copper	1.1	04
EPICA								
2.0	105	X 20 D1	06/06 →	**YJT6KMR**	→ 09/09	Copper	1.0	06
ESTATE								
1.6	80	F16D3	03/05 →	**CT6KMR11**		Copper	1.1	04
1.8	89	F18D3	08/05 →	**D6KMR**		Copper	0.9	04
	90	T18SED	03/05 →	**D6KMR**		Copper	0.9	04
EVANDA								
2.0	96	X 20 SED	03/05 →	**D6KMR**	→ 06/07	Copper	0.9	04
KALOS								
1.2	53	B12S1	03/05 →	**CT5FMR**		Copper	0.8	04
1.4	61	F14S3	03/05 →	**CW7LPR**		Nickel	0.8	04
	61	F14S3	03/05 →	**CT6FMR**		Copper	0.8	04
1.4 16V	69	F14D3	03/05 →	**CT6KMR11**		Copper	1.1	04
LACETTI								
1.4	70	F14D3	03/05 →	**CT6KMR11**		Copper	1.1	04
1.4 16V	70	F14D3	03/05 →	**CT6KMR11**		Copper	1.1	04
1.6	80	F16D3	03/05 →	**CT6KMR11**	→ 04/09	Copper	1.1	04
1.8	89	F18D3	08/05 →	**YJT6KMR**	→ 01/07	Copper	1.0	04
	90	T18SED	03/05 →	**D6KMR**		Copper	0.9	04
LANOS								
1.4	55	A 13 SM	11/05 →	**CW7LPR**		Nickel	0.8	04
	55	A 13 SM	11/05 →	**CT6FMR**		Copper	0.8	04
1.5	63	A15SMS	11/05 →	**CW7LPR**		Nickel	0.8	04
	63	A15SMS	11/05 →	**CT6FMR**		Copper	0.8	04
1.6 16V	78	A16DMS	11/05 →	**CT6KMR11**		Copper	1.1	04
LOVA								
1.2	55	B12D1	04/08 →	**CT7DKMR**		Copper	0.8	04
	55	LMU	01/08 →	**CT7DKMR**		Copper	0.8	04
	62	B12D1	04/08 →	**CT7DKMR**		Copper	0.8	04
	62	LMU	01/08 →	**CT7DKMR**		Copper	0.8	04
1.2 LPG	62	LMU	04/08 →	**CT7DKMR**		Copper	0.8	04
	62	B12D1	01/09 →	**CT7DKMR**		Copper	0.8	04
1.4	69	L14	03/06 → 12/07	**CT6KMR11**		Copper	1.1	04
	69	F14D3	03/06 → 12/07	**CT6KMR11**		Copper	1.1	04
1.5	62	F15S3	05/05 →	**CT6FMR**		Copper	0.8	04
	62	LX6	05/05 →	**CT6FMR**		Copper	0.8	04
1.6	76	LXV	05/05 →	**CT6KMR11**	→ 04/09	Copper	1.1	04
	76	F16D3	05/05 →	**CT6KMR11**	→ 04/09	Copper	1.1	04

	kW					CORE		QTY
CHEVROLET								
MATIZ								
1.0	50	B10D1	03/10→	**CT7DKMR**		Copper	0.8	04
1.2	60	LMU	03/10→	**CT7DKMR**		Copper	0.8	04
	60	B12D1	03/10→	**CT7DKMR**		Copper	0.8	04
1.2 LPG	60	B12D1	03/10→	**CT7DKMR**		Copper	0.8	04
	60	LMU	03/10→	**CT7DKMR**		Copper	0.8	04
NIVA								
1.8 4x4	92	Z 18 XE	01/07→12/09	**A5KMR**		Copper	1.1	04
NUBIRA								
1.6	80	F16D3	03/05→	**CT6KMR11**		Copper	1.1	04
1.8	89	F18D3	08/05→	**D6KMR**		Copper	0.9	04
	90	T18SED	03/05→	**D6KMR**		Copper	0.9	04
1.4	69	F14D3	01/05→	**CT6KMR11**		Copper	1.1	04
OPTRA								
1.4	69	F14D3	01/05→	**CT6KMR11**		Copper	1.1	04
1.6	78	LXT	08/03→12/08	**CT6KMR11**		Copper	1.1	04
	80	F16D3	08/03→12/08	**CT6KMR11**		Copper	1.1	04
	80	F16D3	03/05→	**CT6KMR11**		Copper	1.1	04
1.8	90	T18SED	08/03→12/08	**D6KMR**		Copper	0.9	04
	90	T18SED	03/05→	**D6KMR**		Copper	0.9	04
REZZO								
1.6	77	A16DMS	03/05→	**CT6KMR11**	→06/08	Copper	1.1	04
	79	A16DMS	08/05→	**CT6KMR11**	→06/08	Copper	1.1	04
2.0	89	T20SED	03/05→	**D6KMR**	→06/08	Copper	0.9	04
	90	T20SED	08/05→	**D6KMR**	→06/08	Copper	0.9	04
SPARK								
1.0	50	B10D1	03/10→	**CT7DKMR**		Copper	0.8	04
1.2	60	LMU	03/10→	**CT7DKMR**		Copper	0.8	04
	60	B12D1	03/10→	**CT7DKMR**		Copper	0.8	04
1.2 LPG	60	B12D1	03/10→	**CT7DKMR**		Copper	0.8	04
	60	LMU	03/10→	**CT7DKMR**		Copper	0.8	04
SPIN								
1.5	79	L2C	01/13→	**CT7DKMR**		Copper	0.8	04
TACUMA								
1.6	77	A16DMS	03/05→	**CT6KMR11**	→06/08	Copper	1.1	04
	79	A16DMS	08/05→	**CT6KMR11**	→06/08	Copper	1.1	04
2.0	89	T20SED	03/05→	**D6KMR**	→06/08	Copper	0.9	04
	90	T20SED	08/05→	**D6KMR**	→06/08	Copper	0.9	04
TOSCA								
2.0	105	X 20 D1	06/06→	**YJT6KMR**	→09/09	Copper	1.0	06
VIVA								
1.8	90	Z 18 XE	09/03→03/08	**A5KMR**		Copper	1.1	04
	92	Z 18 XE	09/03→03/08	**A5KMR**		Copper	1.1	04

	kW					CORE		QTY
CHRYSLER								
CARAVAN II								
2.5 i	72	K00	01/91 → 09/95	**CT5FMR**		Copper	0.8	04
	74	K	08/90 → 09/95	**CT5FMR**		Copper	0.8	04
3.0	104	EFA	10/90 → 09/95	**CT5FMR**		Copper	0.8	06
3.0 i	108	6G72	01/91 → 09/95	**CT5FMR**	→ 02/91	Copper	0.8	06
	108	300	01/91 → 09/95	**CT5FMR**	→ 02/91	Copper	0.8	06
CARAVAN III								
2.0 i	98	C00	01/95 → 03/01	**7LPR**		Nickel	0.8	04
	98	C00	01/95 → 03/01	**CT6KMR**		Copper	0.8	04
2.4 AWD	111	EDZ	02/97 → 03/01	**CT5KMR11**		Copper	1.1	04
2.4 i	111	B00	01/95 → 03/01	**CT5KMR11**		Copper	1.1	04
3.0	112	EFA	01/95 → 03/01	**CT5FMR**		Copper	0.8	06
CIRRUS								
2.0 LX	96	ECB	05/94 → 09/97	**7LPR**		Nickel	0.8	04
	96	ECB	05/94 → 09/97	**CT6KMR**		Copper	0.8	04
	98	ECB	10/97 → 09/00	**7LPR**		Nickel	0.8	04
	98	ECB	10/97 → 09/00	**CT6KMR**		Copper	0.8	04
2.4 LX	103	EDZ	05/94 → 09/00	**CT5KMR11**		Copper	1.1	04
GRAND VOYAGER III								
2.0 i	98	C00	01/95 → 03/01	**CT6KMR**		Copper	0.8	04
	98	C00	01/95 → 03/01	**7LPR**		Nickel	0.8	04
2.4 AWD	111	EDZ	02/97 → 03/01	**CT5KMR11**		Copper	1.1	04
2.4 i	111	B00	01/95 → 03/01	**CT5KMR11**		Copper	1.1	04
3.0	112	EFA	01/95 → 03/01	**CT5FMR**		Copper	0.8	06
LE BARON								
2.2 i Turbo	130	EDR	09/89 → 01/91	**CT5FMR**		Copper	0.8	04
2.5 i	75	EDM	01/89 → 12/94	**CT5FMR**		Copper	0.8	04
2.5 i Turbo	112	EDT	01/89 → 12/94	**CT5FMR**		Copper	0.8	04
3.0 i V6	105	EFA	01/90 → 12/94	**CT5FMR**		Copper	0.8	06
NEON								
1.8 16V	85	EBD	09/97 → 08/99	**CT6KMR**		Copper	0.8	04
	85	EBD	09/97 → 08/99	**7LPR**		Nickel	0.8	04
2.0 16V	98	420H	05/94 → 08/99	**CT6KMR**		Copper	0.8	04
	107	ECC	06/94 → 08/99	**CT6KMR**		Copper	0.8	04
	109	420T	04/96 → 08/99	**CT6KMR**		Copper	0.8	04
	98	420H	05/94 → 08/99	**7LPR**		Nickel	0.8	04
	107	ECC	06/94 → 08/99	**7LPR**		Nickel	0.8	04
	109	420T	04/96 → 08/99	**7LPR**		Nickel	0.8	04

	kW					CORE		QTY
CHRYSLER								
NEON II								
1.6	85	EJD	11/01 → 12/06	**7LPR**	→ 09/05	Nickel	0.8	04
	85	EJD	11/01 → 12/06	**CT6KMR**	→ 09/05	Copper	0.8	04
2.0 16V	97	ECB	10/02 → 12/06	**7LPR**		Nickel	0.8	04
	97	ECB	10/02 → 12/06	**CT6KMR**		Copper	0.8	04
	98	ECB	08/99 → 12/06	**7LPR**		Nickel	0.8	04
	98	420H	08/99 → 12/06	**7LPR**		Nickel	0.8	04
	98	ECB	08/99 → 12/06	**CT6KMR**		Copper	0.8	04
	98	420H	08/99 → 12/06	**CT6KMR**		Copper	0.8	04
2.0 16V R/T	110	ECH	10/01 → 12/06	**7LPR**	→ 09/05	Nickel	0.8	04
	110	ECH	10/01 → 12/06	**CT6KMR**	→ 09/05	Copper	0.8	04
PHANTOM								
2.2 i Turbo	130	EDR	09/89 → 01/91	**CT5FMR**		Copper	0.8	04
2.5 i	75	EDM	01/89 → 12/94	**CT5FMR**		Copper	0.8	04
2.5 i Turbo	112	EDT	01/89 → 12/94	**CT5FMR**		Copper	0.8	04
3.0 i V6	105	EFA	01/90 → 12/94	**CT5FMR**		Copper	0.8	06
STRATUS								
2.0 16V	98	ECB	12/95 → 04/01	**CT6KMR**		Copper	0.8	04
	98	ECB	12/95 → 04/01	**7LPR**		Nickel	0.8	04
2.0 LE	96	420X	06/96 → 04/01	**CT6KMR**		Copper	0.8	04
	96	C00	12/95 → 04/01	**CT6KMR**		Copper	0.8	04
	96	C00	12/95 → 04/01	**7LPR**		Nickel	0.8	04
	96	420X	06/96 → 04/01	**7LPR**		Nickel	0.8	04
2.4 16V	103	EDZ	12/95 → 04/01	**CT5KMR11**		Copper	1.1	04
	112	EDZ	12/95 → 04/01	**CT5KMR11**		Copper	1.1	04
VOYAGER II								
2.0 i	98	C00	01/95 → 03/01	**CT6KMR**		Copper	0.8	04
2.4 AWD	111	EDZ	02/97 → 03/01	**CT5KMR11**		Copper	1.1	04
2.4 i	111	B00	01/95 → 03/01	**CT5KMR11**		Copper	1.1	04
2.5 i	72	K00	01/91 → 09/95	**CT5FMR**		Copper	0.8	04
	74	K	08/90 → 09/95	**CT5FMR**		Copper	0.8	04
3.0	104	EFA	10/90 → 09/95	**CT5FMR**		Copper	0.8	06
	112	EFA	01/95 → 03/01	**CT5FMR**		Copper	0.8	06
3.0 i	108	6G72	01/91 → 09/95	**CT5FMR**	→ 02/91	Copper	0.8	06
	108	300	01/91 → 09/95	**CT5FMR**	→ 02/91	Copper	0.8	06
VOYAGER III								
2.0 i	98	C00	01/95 → 03/01	**7LPR**		Nickel	0.8	04
	98	C00	01/95 → 03/01	**CT6KMR**		Copper	0.8	04
2.4 AWD	111	EDZ	02/97 → 03/01	**CT5KMR11**		Copper	1.1	04
2.4 i	111	B00	01/95 → 03/01	**CT5KMR11**		Copper	1.1	04
3.0	112	EFA	01/95 → 03/01	**CT5FMR**		Copper	0.8	06
YPSILON								
1.2	51	169 A4.000	05/11 →	**CT7DKMR**		Copper	0.8	04

	kW					CORE		QTY
CITROËN								
AX								
10	37	CDZ (TU9M)	02/87 → 12/98	**D6KMR**		Copper	0.9	04
11 4x4	40	H1A	06/91 → 07/92	**D6KMR**		Copper	0.9	04
11 Cat	40	HAZ (TU1CP)	09/88 → 12/89	**7LPR**		Nickel	0.8	04
	40	HAZ (TU1CP)	09/88 → 12/89	**CT6KMR**		Copper	0.8	04
14	51	K1G	01/89 → 12/91	**7LPR**		Nickel	0.8	04
	51	K1G	01/89 → 12/91	**CT6KMR**		Copper	0.8	04
	55	KDZ (TU3M/Z)	04/87 → 04/97	**7LPR**		Nickel	0.8	04
	55	KDY (TU3FM)	04/87 → 04/97	**7LPR**		Nickel	0.8	04
	55	KDY (TU3M)	04/87 → 04/97	**7LPR**		Nickel	0.8	04
	55	KDX (TU3M/Z)	04/87 → 04/97	**7LPR**		Nickel	0.8	04
	55	KDZ (TU3M/Z)	04/87 → 04/97	**CT6KMR**		Copper	0.8	04
	55	KDY (TU3M)	04/87 → 04/97	**CT6KMR**		Copper	0.8	04
14 GT	59	KDZ (TU3M/Z)	01/89 → 12/91	**CT6KMMR**		Copper	0.8	04
BERLINGO (B9)								
1.6	66	NFR (TU5JP4B)	04/08 →	**CT5KHMR11**		Copper	1.1	04
	80	NFU (TU5JP4)	04/08 →	**CT5KHMR11**		Copper	1.1	04
	150	NFU (TU5JP4)	04/08 →	**CT5KHMR11**		Copper	1.1	06
BERLINGO (MF)								
1.1 i (MFHDZ, MFHFX)	44	HDZ (TU1M)	07/96 →	**D6KMR**		Copper	0.9	04
	44	HFX (TU1JP)	07/96 →	**D6KMR**		Copper	0.9	04
1.4	53	KFW (TU3JP)	11/02 → 10/05	**7LPR**		Nickel	0.8	04
	53	KFW (TU3JP)	11/02 → 10/05	**CT6KMR**		Copper	0.8	04
1.4 bivalent	48	KFW (TU3JP)	11/02 →	**7LPR**		Nickel	0.8	04
	48	KFW (TU3JP)	11/02 →	**CT6KMR**		Copper	0.8	04
1.4 i (MFKFX, MFKFW)	55	KFW (TU3JP)	07/96 →	**7LPR**		Nickel	0.8	04
	55	KFX (TU3JP)	07/96 →	**7LPR**		Nickel	0.8	04
	55	KFW (TU3JP)	07/96 →	**CT6KMR**		Copper	0.8	04
	55	KFX (TU3JP)	07/96 →	**CT6KMR**		Copper	0.8	04
1.4 i bivalent (MFKFW)	55	KFW (TU3JP)	04/03 →	**7LPR**		Nickel	0.8	04
	55	KFW (TU3JP)	04/03 →	**CT6KMR**		Copper	0.8	04
1.6 16V (MFNFU)	80	NFU (TU5JP4)	10/00 →	**CT5KHMR11**		Copper	1.1	04
	81	NFU (TU5JP4)	11/02 →	**CT5KHMR11**		Copper	1.1	04
1.8 i (MFLFX)	66	LFX (XU7JB)	05/97 →	**D6KMR**		Copper	0.9	04
1.8 i 4WD (MFLFX)	66	LFX (XU7JB)	04/97 →	**D6KMR**		Copper	0.9	04
BX								
11	40	HDZ (TU1M)	10/88 → 06/92	**D6KMR**		Copper	0.9	04
14	55	KDY (TU3M)	01/89 → 02/93	**D6KMR**		Copper	0.9	04
	55	KDZ (TU3M/Z)	01/89 → 02/93	**D6KMR**		Copper	0.9	04
16	58	B1A (XU51C/K)	09/87 → 02/93	**CT6KMMR**	→ 12/91	Copper	0.8	04
16 E	65	BDY (XU5M)	05/89 → 02/93	**CT6KMMR**		Copper	0.8	04
	65	BDZ (XU5M)	05/89 → 02/93	**CT6KMMR**		Copper	0.8	04
19 E	80	DDZ (XU9M)	06/88 → 02/93	**CT6KMMR**		Copper	0.8	04
19 E 4x4	80	D2F	04/89 → 02/93	**CT6KMMR**		Copper	0.8	04
19 GTi	88	DKZ (XU9JA)	06/88 → 02/93	**CT6KMMR**		Copper	0.8	04

	kW					CORE		QTY
CITROËN								
BX								
19 GTi 4x4	88	DKZ (XU9JA)	06/88 → 02/93	**CT6KMMR**		Copper	0.8	04
BX Break								
16	65	BDY (XU5M)	05/89 → 12/94	**CT6KMMR**		Copper	0.8	04
	65	BDZ (XU5M)	05/89 → 12/94	**CT6KMMR**		Copper	0.8	04
19	80	DDZ (XU9M)	06/88 → 12/94	**CT6KMMR**		Copper	0.8	04
	88	DKZ (XU9JA)	06/88 → 12/94	**CT6KMMR**		Copper	0.8	04
19 4x4	78	D2E	06/89 → 05/91	**CT6KMMR**		Copper	0.8	04
	80	DDZ (XU9M)	10/90 → 05/91	**CT6KMMR**		Copper	0.8	04
C2								
1.1	44	HFX (TU1JP)	09/03 →	**CT6KMR**	→ 01/10	Copper	0.8	04
	44	HFX (TU1JP)	09/03 →	**7LPR**	→ 01/10	Nickel	0.8	04
1.4	54	KFV (TU3JP)	09/03 →	**CT6KMR**	→ 04/05	Copper	0.8	04
	54	KFV (TU3JP)	09/03 →	**7LPR**	→ 04/05	Nickel	0.8	04
	55	KFV (TU3JP)	10/06 →	**CT6KMR**	→ 01/10	Copper	0.8	04
	55	KFV (TU3JP)	10/06 →	**7LPR**	→ 01/10	Nickel	0.8	04
1.4 16V	65	KFU (ET3J4)	06/06 →	**CT5LDMR9**	→ 01/10	Copper	0.9	04
1.6	80	NFU (TU5JP4)	09/03 →	**CT5KHMR11**		Copper	1.1	04
1.6 VTR	90	NFS (TU5JP4S)	01/05 →	**CT5KHMR11**		Copper	1.1	04
1.6 VTS	90	NFS (TU5JP4S)	01/05 →	**CT5KHMR11**		Copper	1.1	04
C3 I								
1.1 i	44	HFX (TU1A)	02/02 →	**7LPR**	→ 10/09	Nickel	0.8	04
	44	HFX (TU1JP)	02/02 →	**CT6KMR**	→ 10/09	Copper	0.8	04
1.4 16V	65	KFU (ET3J4)	12/03 →	**CT5LDMR9**	→ 10/09	Copper	0.9	04
1.4 Bioflex	60	KFV (TU3JP)	01/09 →	**7LPR**		Nickel	0.8	04
	60	KFV (TU3JP)	01/09 →	**CT6KMR**		Copper	0.8	04
1.4 i	54	KFV (TU3A)	02/02 →	**7LPR**	→ 10/09	Nickel	0.8	04
	54	KFV (TU3JP)	02/02 →	**CT6KMR**	→ 10/09	Copper	0.8	04
1.4 i Bivalent	54	KFV (TU3JP)	02/02 →	**7LPR**	→ 10/09	Nickel	0.8	04
	54	KFV (TU3JP)	02/02 →	**CT6KMR**	→ 10/09	Copper	0.8	04
1.4 i GLX	54	KFV (TU3A)	02/02 →	**7LPR**	→ 10/09	Nickel	0.8	04
	54	KFV (TU3JP)	02/02 →	**CT6KMR**	→ 10/09	Copper	0.8	04
1.6 16V	80	NFU (TU5JP4)	02/02 →	**CT5KHMR11**		Copper	1.1	04
	81	NFU (TU5JP4)	05/03 → 09/05	**CT5KHMR11**		Copper	1.1	04
1.6 Bioflex	83	NFU (TU5JP4)	10/05 →	**CT5KHMR11**		Copper	1.1	04
1.6 Exclusive 16V	81	NFU (TU5JP4)	05/03 → 09/05	**CT5KHMR11**		Copper	1.1	04
1.6 Exclusive Bioflex	83	NFU (TU5JP4)	10/05 →	**CT5KHMR11**		Copper	1.1	04
C3 II								
1.1	44	HFX (TU1JP)	11/09 →	**7LPR**		Nickel	0.8	04
1.1 BiFuel	44	HFX (TU1A)	11/10 →	**CT6KMR**	→ 01/11	Copper	0.8	04
1.4	54	KFT (TU3A)	11/09 →	**7LPR**		Nickel	0.8	04
	54	KFV (TU3A)	11/09 →	**CT6KMR**		Copper	0.8	04

	kW					CORE		QTY
CITROËN								
C3 Pluriel								
1.4	54	KFV (TU3JP)	05/03 →	**CT6KMR**	→ 01/11	Copper	0.8	04
	54	KFV (TU3JP)	05/03 →	**7LPR**	→ 01/11	Nickel	0.8	04
1.4 Hybrid	54	KFV (TU3JP)	05/05 →	**CT6KMR**	→ 01/11	Copper	0.8	04
	54	KFV (TU3JP)	05/05 →	**7LPR**	→ 01/11	Nickel	0.8	04
1.6	80	NFU (TU5JP4)	05/03 →	**CT5KHMR11**		Copper	1.1	04
C4 Coupé								
1.4 16V	65	KFU (ET3J4)	11/04 → 07/11	**CT5LDMR9**	→ 06/10	Copper	0.9	04
1.6 16V	80	NFU (TU5JP4)	11/04 → 07/11	**CT5KHMR11**		Copper	1.1	04
2.0 16V	100	RFN (EW10J4)	11/04 → 07/07	**CT5KHMR11**		Copper	1.1	04
	130	RFK (EW10J4S)	11/04 → 12/10	**CT6KHMR11**		Copper	1.1	04
C4 Grand Picasso I								
1.8 i 16V	92	6FY (EW7A)	10/06 →	**CT5KHMR11**		Copper	1.1	04
2.0 i 16V	103	RFJ (EW10A)	10/06 →	**CT5KHMR11**		Copper	1.1	04
	105	RFJ (EW10A)	01/10 →	**CT5KHMR11**		Copper	1.1	04
2.0 i Exclusive 16V	105	RFJ (EW10A)	01/10 →	**CT5KHMR11**		Copper	1.1	04
C4 I								
1.4 16V	65	KFU (ET3J4)	11/04 → 07/11	**CT5LDMR9**	→ 01/11	Copper	0.9	04
1.6 16V	80	NFU (TU5JP4)	11/04 → 07/11	**CT5KHMR11**		Copper	1.1	04
1.6 16V Bio-Flex	80	NFU (TU5JP4)	09/07 → 07/08	**CT6KHMR11**		Copper	1.1	04
2.0 16V	100	RFN (EW10J4)	11/04 → 07/07	**CT5KHMR11**		Copper	1.1	04
	103	RFJ (EW10A)	11/04 → 07/11	**CT5KHMR11**		Copper	1.1	04
	130	RFK (EW10J4S)	11/04 → 07/08	**CT6KHMR11**	→ 08/05	Copper	1.1	04
2.0 VTR 16V	103	RFJ (EW10A)	11/04 → 07/11	**CT5KHMR11**		Copper	1.1	04
C4 Picasso I								
1.8 Bifuel	92	6FY (EW7A)	01/09 → 10/12	**CT5KHMR11**		Copper	1.1	04
1.8 i 16V	92	6FY (EW7A)	02/07 → 12/11	**CT5KHMR11**		Copper	1.1	04
2.0 i 16V	103	RFJ (EW10A)	02/07 → 08/13	**CT5KHMR11**		Copper	1.1	04
	105	RFN (EW10J4)	05/08 → 05/13	**CT5KHMR11**		Copper	1.1	04
2.0 i Exclusive 16V	103	RFJ (EW10A)	02/07 → 08/13	**CT5KHMR11**		Copper	1.1	04
C4 Tre volumi								
1.6 16V	80	NFU (TU5JP4)	07/06 → 07/11	**CT5KHMR11**		Copper	1.1	04
2.0 16V	103	RFJ (EW10A)	07/06 →	**CT5KHMR11**		Copper	1.1	04
C5 I								
1.8 16V (DC6FZB, DC6FZE)	85	6FZ (EW7J4)	03/01 → 08/04	**CT5KHMR11**		Copper	1.1	04
2.0 16V (DCRFNC, DCRFNF)	100	RFN (EW10J4)	03/01 → 08/04	**CT5KHMR11**		Copper	1.1	04
2.0 16V HPi (DCRLZB)	103	RLZ (EW10D)	03/01 → 08/04	**CT5KHMR11**		Copper	1.1	04
2.0 Exclusive 16V (DCRFNC, DCRFNF)	100	RFN (EW10J4)	03/01 → 08/04	**CT5KHMR11**		Copper	1.1	04

	kW					CORE		QTY
CITROËN								
C5 I Break								
1.8 16V (DE6FZB, DE6FZE)	85	6FZ (EW7J4)	06/01 → 08/04	**CT5KHMR11**		Copper	1.1	04
2.0 16V (DERFNF, DERFNC, RERFNC)	100	RFN (EW10J4)	06/01 → 08/04	**CT5KHMR11**		Copper	1.1	04
2.0 16V HPi (DERLZB)	103	RLZ (EW10D)	06/01 → 08/04	**CT5KHMR11**		Copper	1.1	04
2.0 Exclusive 16V (DERFNF, DERFNC, RERFNC)	100	RFN (EW10J4)	06/01 → 08/04	**CT5KHMR11**		Copper	1.1	04
C5 II								
1.8 16V	92	6FY (EW7A)	09/05 →	**CT5KHMR11**	→ 03/08	Copper	1.1	04
1.8 16V (RC6FZB)	85	6FZ (EW7J4)	09/04 →	**CT5KHMR11**	→ 12/05	Copper	1.1	04
2.0 16V (RCRFJB, RCRFJC)	103	RFJ (EW10A)	09/04 →	**CT5KHMR11**		Copper	1.1	04
2.0 Exclusive 16V (RCRFJB, RCRFJC)	103	RFJ (EW10A)	09/04 →	**CT5KHMR11**		Copper	1.1	04
C5 II Break								
1.8 16V	92	6FY (EW7A)	09/05 →	**CT5KHMR11**	→ 03/08	Copper	1.1	04
1.8 16V (RE6FZB)	85	6FZ (EW7J4)	09/04 →	**CT5KHMR11**	→ 12/05	Copper	1.1	04
2.0 16V (RERFJB, RERFJC)	103	RFJ (EW10A)	09/04 →	**CT5KHMR11**		Copper	1.1	04
2.0 Exclusive 16V (RERFJB, RERFJC)	103	RFJ (EW10A)	09/04 →	**CT5KHMR11**		Copper	1.1	04
C5 III								
1.8 16V	92	6FY (EW7A)	02/08 →	**CT5KHMR11**		Copper	1.1	04
2.0 16V	103	RFJ (EW10A)	02/08 →	**CT5KHMR11**		Copper	1.1	04
2.0 16V BioFlex	103	RFJ (EW10A)	02/08 →	**CT6KHMR11**		Copper	1.1	04
2.0 Exclusive BioFlex 16V	103	RFJ (EW10A)	02/08 →	**CT6KHMR11**		Copper	1.1	04
C5 III Break								
1.8 16V	92	6FY (EW7A)	02/08 →	**CT5KHMR11**		Copper	1.1	04
2.0 16V	103	RFJ (EW10A)	02/08 →	**CT5KHMR11**		Copper	1.1	04
2.0 16V BioFlex	103	RFJ (EW10A)	02/08 →	**CT6KHMR11**		Copper	1.1	04
2.0 Exclusive 16V	103	RFJ (EW10A)	02/08 →	**CT5KHMR11**		Copper	1.1	04
C8								
2.0	100	RFN (EW10J4)	07/02 →	**CT5KHMR11**		Copper	1.1	04
2.0 16V	103	RFJ (EW10A)	09/05 →	**CT5KHMR11**		Copper	1.1	04
	104	RFJ (EW10A)	09/05 →	**CT5KHMR11**		Copper	1.1	04
2.0 Exclusive	100	RFN (EW10J4)	07/02 →	**CT5KHMR11**		Copper	1.1	04
2.2	116	3FZ (EW12J4)	07/02 →	**CT6KHMR11**	→ 09/05	Copper	1.1	04

	kW					CORE		QTY
CITROËN								
C15								
1.1	40	HDZ (TU1M)	10/88 → 10/92	**7LPR**		Nickel	0.8	04
	44	HDZ (TU1M)	08/88 → 07/96	**7LPR**	09/89 →	Nickel	0.8	04
1.1 i	44	HDZ (TU1M)	07/88 → 12/96	**D6KMR**		Copper	0.9	04
1.3	47	G1A	07/87 → 05/88	**CT6KMR**		Copper	0.8	04
	47	G1A	07/87 → 05/88	**7LPR**		Nickel	0.8	04
1.4	55	KDY (TU3M)	05/91 → 07/96	**CT6KMR**		Copper	0.8	04
	55	KDY (TU3M)	05/91 → 07/96	**7LPR**		Nickel	0.8	04
1.4 i	55	KDY (TU3FM)	05/91 → 12/96	**CT6KMMR**		Copper	0.8	04
	55	KDY (TU3M)	05/91 → 12/96	**CT6KMMR**		Copper	0.8	04
C15 Station wagon								
1.1	40	HDZ (TU1M)	10/88 → 10/92	**CT6KMR**		Copper	0.8	04
	44	HDZ (TU1M)	08/88 → 07/96	**CT6KMR**	09/89 →	Copper	0.8	04
C25								
2.0	62	170C (XN1T)	02/91 → 02/94	**CW7LP**		Nickel	0.8	04
	62	170C (XN1T)	02/91 → 02/94	**CT6FM**		Copper	0.8	04
C-ELYSEE								
1.6 VTi 115	85	NFP (EC5)	11/12 →	**CT5KHMR11**		Copper	1.1	04
CHANSON								
1.0 X	33	CDZ (TU9M)	05/96 → 11/98	**D6KMR**		Copper	0.9	04
	37	CDZ (TU9M)	05/98 → 06/03	**D6KMR**		Copper	0.9	04
1.1 X,SX	40	HDZ (TU1M)	05/96 → 09/03	**D6KMR**		Copper	0.9	04
	44	HFX (TU1JP)	05/96 → 09/03	**D6KMR**		Copper	0.9	04
	44	HDZ (TU1M)	05/96 → 09/03	**D6KMR**		Copper	0.9	04
1.4 VTS	55	KFW (TU3JP)	05/96 → 06/03	**CT6KMR**		Copper	0.8	04
	55	KFX (TU3JP)	05/96 → 06/03	**CT6KMR**		Copper	0.8	04
	55	KFW (TU3JP)	05/96 → 06/03	**7LPR**		Nickel	0.8	04
	55	KFX (TU3JP)	05/96 → 06/03	**7LPR**		Nickel	0.8	04
1.6	66	NFZ (TU5JP)	02/96 → 06/03	**D6KMR**		Copper	0.9	04
1.6 VTL,VTR	65	NFZ (TU5JP)	05/96 → 06/03	**D6KMR**		Copper	0.9	04
1.6 VTS	72	NFT (TU5JP)	09/00 → 09/03	**CT6KMR**		Copper	0.8	04
	72	NFT (TU5JP)	09/00 → 09/03	**7LPR**		Nickel	0.8	04
	87	NFX (TU5JP4)	06/96 → 09/03	**D6KMR**		Copper	0.9	04
CX I Break								
25 TRI	100	M25-659	07/83 → 08/85	**CW7NP**		Nickel	0.8	04
CX II Break								
25 TRI	100	M25-659	08/85 → 12/92	**CW7NP**	→ 07/87	Nickel	0.8	04
DISPATCH								
1.6	58	1580 SPI	10/95 →	**CT6KMMR**	→ 12/03	Copper	0.8	04
	58	220 A2.000	10/95 →	**CT6KMMR**	→ 12/03	Copper	0.8	04
2.0	100	RFN (EW10J4)	04/00 → 12/06	**CT5KHMR11**		Copper	1.1	04
2.0 i	103	RFH (EW10A)	01/07 →	**CT6KHMR11**		Copper	1.1	04
2.0 i 16V	102	RFN (EW10J4)	03/00 →	**CT5KHMR11**	01/04 → 12/06	Copper	1.1	04

	kW					CORE		QTY
CITROËN								
DISPATCH Van								
1.6 i	58	1580 SPI	10/95 →	**CT6KMMR**		Copper	0.8	04
	58	220 A2.000	10/95 →	**CT6KMMR**		Copper	0.8	04
2.0 i 16V	102	RFN (EW10J4)	03/00 →	**CT5KHMR11**	→ 12/06	Copper	1.1	04
EVASION								
1.8	73	LFZ (XU7JP)	05/97 → 07/02	**D6KMR**		Copper	0.9	04
2.0	89	RFU (XU10J2/C)	06/94 → 07/02	**CT6KMMR**		Copper	0.8	04
2.0 16V	97	RFV (XU10J4R)	05/98 → 04/00	**D6KMR**		Copper	0.9	04
	100	RFN (EW10J4)	05/00 → 07/02	**CT5KHMR11**		Copper	1.1	04
2.0 GLX	89	RFU (XU10J2/C)	06/94 → 07/02	**CT6KMMR**		Copper	0.8	04
2.0 Turbo C.T.	108	RGX (XU10J2TE)	06/94 → 07/02	**CT6KMR**		Copper	0.8	04
	108	RGX (XU10J2TE)	06/94 → 07/02	**7LPR**		Nickel	0.8	04
2.0 VSX Turbo	108	RGX (XU10J2TE)	06/94 → 07/02	**CT6KMR**		Copper	0.8	04
	108	RGX (XU10J2TE)	06/94 → 07/02	**7LPR**		Nickel	0.8	04
JUMPER								
2.0	80	RFW (XU10J2U)	02/94 → 04/02	**D6KMR**		Copper	0.9	04
	81	XU10J2	04/02 →	**7LPR**	→ 06/06	Nickel	0.8	04
	81	XU10J2	04/02 →	**CT6KMR**	→ 06/06	Copper	0.8	04
2.0 4x4	80	RFW (XU10J2U)	10/96 → 01/02	**7LPR**		Nickel	0.8	04
	80	RFW (XU10J2U)	10/96 → 01/02	**CT6KMR**		Copper	0.8	04
	80	RFW (XU10J2U)	08/96 → 04/02	**CT6KMMR**		Copper	0.8	04
2.0 bivalent	81	XU10J2	02/03 →	**7LPR**	→ 06/06	Nickel	0.8	04
	81	XU10J2	02/03 →	**CT6KMR**	→ 06/06	Copper	0.8	04
2.0 i	80	RFW (XU10J2U)	03/94 → 04/02	**CT6KMMR**		Copper	0.8	04
JUMPY								
1.6	58	1580 SPI	10/95 →	**CT6KMMR**	→ 12/03	Copper	0.8	04
	58	220 A2.000	10/95 →	**CT6KMMR**	→ 12/03	Copper	0.8	04
1.6 i	58	1580 SPI	10/95 →	**CT6KMMR**		Copper	0.8	04
	58	220 A2.000	10/95 →	**CT6KMMR**		Copper	0.8	04
2.0	100	RFN (EW10J4)	12/03 → 10/06	**CT5KHMR11**		Copper	1.1	04
	100	RFN (EW10J4)	04/00 → 12/06	**CT5KHMR11**		Copper	1.1	04
2.0 i	103	RFH (EW10A)	01/07 →	**CT6KHMR11**		Copper	1.1	04
2.0 i 16V	102	RFN (EW10J4)	03/00 →	**CT5KHMR11**	→ 12/06	Copper	1.1	04
MEHARI								
4x4	21	A06/635	10/97 → 10/87	**CW6N**		Copper	0.8	02
NEMO								
1.4	54	KFV (TU3A)	02/08 →	**CT6KMR**		Copper	0.8	04
	54	KFV (TU3A)	04/09 →	**CT6KMR**		Copper	0.8	04
	54	KFT (TU3A)	04/09 →	**CT6KMR**		Copper	0.8	04
NEMO Station wagon								
1.4	54	KFV (TU3A)	04/09 →	**7LPR**		Nickel	0.8	04
	54	KFT (TU3A)	04/09 →	**7LPR**		Nickel	0.8	04

	kW					CORE		QTY
CITROËN								
RELAY								
2.0	80	RFW (XU10J2U)	02/94 → 04/02	**D6KMR**		Copper	0.9	04
	80	RFW (XU10J2U)	03/94 → 04/02	**CT6KMMR**		Copper	0.8	04
	81	XU10J2	04/02 →	**7LPR**	→ 06/06	Nickel	0.8	04
	81	XU10J2	04/02 →	**CT6KMR**	→ 06/06	Copper	0.8	04
2.0 4x4	80	RFW (XU10J2U)	10/96 → 01/02	**7LPR**		Nickel	0.8	04
	80	RFW (XU10J2U)	08/96 → 04/02	**CT6KMMR**		Copper	0.8	04
	80	RFW (XU10J2U)	10/96 → 01/02	**CT6KMR**		Copper	0.8	04
2.0 bivalent	81	XU10J2	02/03 →	**7LPR**	→ 06/06	Nickel	0.8	04
	81	XU10J2	02/03 →	**CT6KMR**	→ 06/06	Copper	0.8	04
2.0 i	80	RFW (XU10J2U)	03/94 → 04/02	**CT6KMMR**		Copper	0.8	04
SAXO								
1.0 X	33	CDZ (TU9M)	05/96 → 11/98	**D6KMR**		Copper	0.9	04
	37	CDZ (TU9M)	05/98 → 06/03	**D6KMR**		Copper	0.9	04
1.1 X,SX	40	HDZ (TU1M)	05/96 → 09/03	**D6KMR**		Copper	0.9	04
	44	HDZ (TU1M)	05/96 → 09/03	**D6KMR**		Copper	0.9	04
	44	HFX (TU1JP)	05/96 → 09/03	**D6KMR**		Copper	0.9	04
1.4 VTS	55	KFW (TU3JP)	05/96 → 06/03	**7LPR**		Nickel	0.8	04
	55	KFX (TU3JP)	05/96 → 06/03	**7LPR**		Nickel	0.8	04
	55	KFW (TU3JP)	05/96 → 06/03	**CT6KMR**		Copper	0.8	04
	55	KFX (TU3JP)	05/96 → 06/03	**CT6KMR**		Copper	0.8	04
1.6	88	NFX (TU5JP4)	02/96 → 04/04	**D6KMR**		Copper	0.9	04
	66	NFZ (TU5JP)	02/96 → 06/03	**D6KMR**		Copper	0.9	04
1.6 VTL,VTR	65	NFZ (TU5JP)	05/96 → 06/03	**D6KMR**		Copper	0.9	04
1.6 VTS	72	NFT (TU5JP)	09/00 → 09/03	**7LPR**		Nickel	0.8	04
	72	NFT (TU5JP)	09/00 → 09/03	**CT6KMR**		Copper	0.8	04
	87	NFX (TU5JP4)	06/96 → 09/03	**D6KMR**		Copper	0.9	04
SYNERGIE								
1.8	73	LFZ (XU7JP)	05/97 → 07/02	**D6KMR**		Copper	0.9	04
2.0	89	RFU (XU10J2/C)	06/94 → 07/02	**CT6KMMR**		Copper	0.8	04
2.0 16V	97	RFV (XU10J4R)	05/98 → 04/00	**D6KMR**		Copper	0.9	04
	100	RFN (EW10J4)	05/00 → 07/02	**CT5KHMR11**		Copper	1.1	04
2.0 GLX	89	RFU (XU10J2/C)	06/94 → 07/02	**CT6KMMR**		Copper	0.8	04
2.0 Turbo C.T.	108	RGX (XU10J2TE)	06/94 → 07/02	**7LPR**		Nickel	0.8	04
	108	RGX (XU10J2TE)	06/94 → 07/02	**CT6KMR**		Copper	0.8	04
2.0 VSX Turbo	108	RGX (XU10J2TE)	06/94 → 07/02	**7LPR**		Nickel	0.8	04
	108	RGX (XU10J2TE)	06/94 → 07/02	**CT6KMR**		Copper	0.8	04
XANTIA (X1)								
1.6 i	65	BFZ (XU5JP)	03/93 → 01/98	**D6KMR**		Copper	0.9	04
1.8 i	66	LFX (XU7JB)	04/97 → 01/98	**D6KMR**		Copper	0.9	04
	74	LFZ (XU7JP)	03/93 → 01/98	**D6KMR**		Copper	0.9	04
1.8 i 16V	81	LFY (XU7JP4)	06/95 → 01/98	**D6KMR**		Copper	0.9	04
2.0 i	89	RFX (XU10J2C)	03/93 → 01/98	**D6KMR**		Copper	0.9	04

	kW					CORE		QTY
CITROËN								
XANTIA (X1)								
2.0 i 16V	97	RFV (XU10J4R)	06/95 → 01/98	**D6KMR**		Copper	0.9	04
	110	RFT (XU10J4/Z)	06/94 → 01/98	**7LPR**		Nickel	0.8	04
	110	RFT (XU10J4/Z)	06/94 → 01/98	**CT6KMR**		Copper	0.8	04
	112	RFY (XU10J4/Z)	03/93 → 01/98	**7LPR**		Nickel	0.8	04
	112	RFY (XU10J4/Z)	03/93 → 01/98	**CT6KMR**		Copper	0.8	04
2.0 Turbo	108	RGX (XU10J2TE)	06/95 → 01/98	**7LPR**		Nickel	0.8	04
	108	RGX (XU10J2TE)	06/95 → 01/98	**CT6KMR**		Copper	0.8	04
3.0 i 24V	140	XFZ (ES9J4)	01/97 → 01/98	**D6KMR**		Copper	0.9	06
XANTIA (X2)								
1.6 i SX	65	BFZ (XU5JP)	01/98 → 03/01	**7LPR**		Nickel	0.8	04
	65	BFZ (XU5JP)	01/98 → 03/01	**CT6KMR**		Copper	0.8	04
1.8 i	66	LFX (XU7JB)	01/98 → 04/03	**7LPR**		Nickel	0.8	04
	66	LFX (XU7JB)	01/98 → 04/03	**CT6KMR**		Copper	0.8	04
1.8 i 16V	81	LFY (XU7JP4)	01/98 → 04/03	**7LPR**		Nickel	0.8	04
	81	LFY (XU7JP4)	01/98 → 04/03	**CT6KMR**		Copper	0.8	04
2.0 i	89	RFX (XU10J2C)	01/98 → 04/03	**7LPR**		Nickel	0.8	04
	89	RFX (XU10J2C)	01/98 → 04/03	**CT6KMR**		Copper	0.8	04
2.0 i 16V	97	RFV (XU10J4R)	01/98 → 04/03	**7LPR**		Nickel	0.8	04
	97	RFV (XU10J4R)	01/98 → 04/03	**CT6KMR**		Copper	0.8	04
2.0 Turbo	108	RGX (XU10J2TE)	01/98 → 04/03	**7LPR**		Nickel	0.8	04
	108	RGX (XU10J2TE)	01/98 → 04/03	**CT6KMR**		Copper	0.8	04
3.0 V6	140	XFZ (ES9J4)	01/98 → 04/03	**D6KMR**		Copper	0.9	06
XANTIA Break (X1)								
2.0 i	89	RFX (XU10J2C)	06/95 → 01/98	**D6KMR**		Copper	0.9	04
XANTIA Break (X2)								
2.0 i	89	RFX (XU10J2C)	01/98 → 04/03	**CT6KMR**	→ 04/98	Copper	0.8	04
XM								
2.0	94	R6A	05/89 → 06/94	**CT6KMMR**	→ 12/89	Copper	0.8	04
2.0 i	79	RDZ (XU10MZ)	05/89 → 04/94	**CT6KMMR**		Copper	0.8	04
	89	RFZ (XU10J2)	05/89 → 06/94	**CT6KMMR**		Copper	0.8	04
2.0 i 16V	97	RFV (XU10J4R)	05/94 → 10/00	**D6KMR**	07/95 →	Copper	0.9	04
2.0 Turbo	108	RGX (XU10J2TE)	05/94 → 10/00	**CT6KMR**		Copper	0.8	04
	108	RGX (XU10J2TE)	05/94 → 10/00	**7LPR**		Nickel	0.8	04
3.0 V6	140	XFZ (ES9J4)	04/97 → 10/00	**D6KMR**		Copper	0.9	06
XSARA								
1.4 i	55	KFX (TU3JP)	03/98 → 03/05	**D6KMR**		Copper	0.9	04
	55	KFW (TU3JP)	03/98 → 03/05	**D6KMR**		Copper	0.9	04
	55	KFW (TU3JP)	04/97 → 03/05	**7LPR**		Nickel	0.8	04
	55	KFX (TU3JP)	04/97 → 03/05	**7LPR**		Nickel	0.8	04
	55	KFW (TU3JP)	04/97 → 03/05	**CT6KMR**		Copper	0.8	04
	55	KFX (TU3JP)	04/97 → 03/05	**CT6KMR**		Copper	0.8	04
1.6 16V	80	NFU (TU5JP4)	09/00 → 03/05	**CT5KHMR11**		Copper	1.1	04
1.6 Exclusive 16V	80	NFU (TU5JP4)	09/00 → 08/05	**CT5KHMR11**		Copper	1.1	04
1.6 GLX 16V	80	NFU (TU5JP4)	09/00 → 03/05	**CT5KHMR11**		Copper	1.1	04

	kW					CORE		QTY
CITROËN								
XSARA								
1.6 i	65	NFZ (TU5JP)	04/97 → 09/00	**CT5KMMR**		Copper	0.8	04
1.8 i	66	LFX (XU7JB)	04/97 → 09/00	**D6KMR**		Copper	0.9	04
1.8 i 16V	81	LFY (XU7JP4)	04/97 → 09/00	**D6KMR**		Copper	0.9	04
1.8 i Aut.	74	LFZ (XU7JP)	04/97 → 09/00	**D6KMR**		Copper	0.9	04
1.8 i GLX 16V	81	LFY (XU7JP4)	04/97 → 09/00	**D6KMR**		Copper	0.9	04
1.8 VTS	85	6FZ (EW7J4)	08/98 → 12/00	**CT5KHMR11**		Copper	1.1	04
2.0	97	RFV (XU10J4R)	08/98 → 08/00	**D6KMR**		Copper	0.9	04
2.0 16V	97	RFV (XU10J4R)	07/98 → 09/00	**D6KMR**		Copper	0.9	04
	100	RFN (EW10J4)	09/00 → 03/05	**CT5KHMR11**		Copper	1.1	04
	120	RFS (XU10J4RS)	04/97 → 09/00	**7LPR**		Nickel	0.8	04
	120	RFS (XU10J4RS)	04/97 → 09/99	**CT6KMR**		Copper	0.8	04
2.0 GLX 16V	97	RFV (XU10J4R)	07/98 → 09/00	**D6KMR**		Copper	0.9	04
	100	RFN (EW10J4)	09/00 → 03/05	**CT5KHMR11**		Copper	1.1	04
2.0 i 16V	120	RFS (XU10J4RS)	02/98 → 03/05	**CT6KMR**	→ 08/00	Copper	0.8	04
XSARA PICASSO								
1.6	65	NFZ (TU5JP)	12/99 →	**CT5KMMR**		Copper	0.8	04
	67	NFZ (TU5JP)	06/02 →	**CT5KMMR**		Copper	0.8	04
	70	NFV (TU5JP)	12/99 →	**CT5KMMR**		Copper	0.8	04
1.6 16V	80	NFU (TU5JP4)	09/05 →	**CT5KHMR11**		Copper	1.1	04
	81	NFU (TU5JP4)	06/05 → 09/06	**CT5KHMR11**		Copper	1.1	04
1.6 Exclusive 16V	81	NFU (TU5JP4)	06/05 → 09/06	**CT5KHMR11**		Copper	1.1	04
1.8 16V	85	6FZ (EW7J4)	02/00 →	**CT5KHMR11**	→ 12/05	Copper	1.1	04
2.0 16V	100	RFN (EW10J4)	01/03 →	**CT5KHMR11**		Copper	1.1	04
2.0 GLX 16V	100	RFN (EW10J4)	01/03 →	**CT5KHMR11**		Copper	1.1	04
ZX (N2)								
1.1	44	HDZ (TU1M)	03/91 → 06/97	**D6KMR**		Copper	0.9	04
1.4	55	KDZ (TU3M/Z)	03/91 → 06/97	**CT6KMMR**		Copper	0.8	04
1.4 i	55	KDX (TU3M/Z)	03/91 → 06/97	**D6KMR**		Copper	0.9	04
	55	KFX (TU3JP)	03/91 → 06/97	**D6KMR**		Copper	0.9	04
1.6	66	BFZ (XU5JP)	07/94 → 10/97	**D6KMR**		Copper	0.9	04
	66	BDY (XU5M)	07/94 → 10/97	**D6KMR**		Copper	0.9	04
1.6 i	65	BDY (XU5M)	03/91 → 06/97	**CT6KMMR**		Copper	0.8	04
	65	BFZ (XU5JP)	03/91 → 06/97	**CT6KMMR**		Copper	0.8	04
1.8	76	LFZ (XU7JP)	07/94 → 10/97	**7LPR**		Nickel	0.8	04
	76	LFZ (XU7JP)	07/94 → 10/97	**CT6KMR**		Copper	0.8	04
	82	LFY (XU7JP4)	04/96 → 10/97	**D6KMR**		Copper	0.9	04
1.8 i	74	LFZ (XU7JP)	07/94 → 06/97	**D6KMR**		Copper	0.9	04
1.8 i 16V	81	LFY (XU7JP4)	01/96 → 06/97	**D6KMR**		Copper	0.9	04
1.9	93	D6E (XU9JA)	03/91 → 06/97	**7LPR**	→ 08/92	Nickel	0.8	04
	93	D6E (XU9JA)	03/91 → 06/97	**CT6KMR**	→ 08/92	Copper	0.8	04
1.9 i	88	DKZ (XU9JA)	03/91 → 06/97	**CT6KMMR**	→ 06/94	Copper	0.8	04
2.0	90	RFX (XU10J2C)	07/94 → 10/97	**D6KMR**		Copper	0.9	04
2.0 i	89	RFX (XU10J2C)	07/94 → 06/97	**D6KMR**		Copper	0.9	04

	kW					CORE		QTY
CITROËN								
ZX (N2)								
2.0 i 16V	112	RFT (XU10J4/Z)	07/92 → 10/94	**7LPR**		Nickel	0.8	04
	112	RFY (XU10J4/Z)	07/94 → 10/94	**CT6KMR**		Copper	0.8	04
	114	RFT (XU10J4/Z)	07/92 → 10/97	**7LPR**		Nickel	0.8	04
	114	RFY (XU10J4/Z)	07/92 → 10/97	**7LPR**		Nickel	0.8	04
2.0 i Volcane 16V	114	RFT (XU10J4/Z)	07/92 → 10/97	**CT6KMR**		Copper	0.8	04
	114	RFY (XU10J4/Z)	07/92 → 10/97	**CT6KMR**		Copper	0.8	04
ZX Break (N2)								
1.4 i	55	KFX (TU3JP)	10/93 → 10/97	**CT6KMR**		Copper	0.8	04
	55	KDX (TU3M/Z)	10/93 → 10/97	**CT6KMR**		Copper	0.8	04
	55	KDY (TU3M)	10/93 → 10/97	**CT6KMR**		Copper	0.8	04
DACIA								
DUSTER								
1.6 16V	77	K4M 696	04/10 →	**7LPR**		Nickel	0.8	04
	77	K4M 690	04/10 →	**7LPR**		Nickel	0.8	04
	77	K4M 690	04/10 →	**CT6KMR**		Copper	0.8	04
1.6 16V 4x4	77	K4M 606	06/10 →	**7LPR**		Nickel	0.8	04
	77	K4M 606	06/10 →	**CT6KMR**		Copper	0.8	04
1.6 16V Hi-Flex	77	K4M 696	08/10 →	**CT6KMR**		Copper	0.8	04
LODGY								
1.6	61	K7M 812	03/12 →	**7LPR**		Nickel	0.8	04
	61	K7M 828	03/12 →	**CT6KMR**		Copper	0.8	04
LOGAN								
1.2 16V	55	D4F 732	02/06 →	**CT5LDMR9**		Copper	0.9	04
1.2 16V LPG	55	D4F 734	02/06 →	**CT5LDMR9**		Copper	0.9	04
1.4 (LSOA, LSOC, LSOE, LSOG)	55	K7J 710	09/04 →	**7LPR**		Nickel	0.8	04
	55	K7J 710	09/04 →	**CT6KMR**		Copper	0.8	04
1.4 MPI LPG (LS0C)	55	K7J 710	02/06 →	**D6KMR**		Copper	0.9	04
	55	K7J 714	02/06 →	**D6KMR**		Copper	0.9	04
1.6 (LSOB, LSOD, LSOF, LSOH)	64	K7M 710	09/04 →	**7LPR**		Nickel	0.8	04
	64	K7M 710	09/04 →	**CT6KMR**		Copper	0.8	04
1.6 16V (LS0M)	77	K4M 696	02/06 →	**7LPR**		Nickel	0.8	04
	77	K4M 690	02/06 →	**CT6KMR**		Copper	0.8	04
1.6 16V Flexifuel	77	K4M 696	07/10 →	**7LPR**		Nickel	0.8	04
	77	K4M 696	07/10 →	**CT6KMR**		Copper	0.8	04
1.6 Bifuel	62	K7M 718	05/10 →	**7LPR**		Nickel	0.8	04
	62	K7M 718	05/10 →	**CT6KMR**		Copper	0.8	04
1.6 MPI 85	62	K7M 800	05/10 →	**D6KMR**		Copper	0.9	04
LOGAN EXPRESS								
1.4	55	K7J 710	03/09 →	**7LPR**		Nickel	0.8	04
	55	K7J 710	03/09 →	**CT6KMR**		Copper	0.8	04
1.6	64	K7M 710	03/09 →	**7LPR**		Nickel	0.8	04
	64	K7M 710	03/09 →	**CT6KMR**		Copper	0.8	04
1.6 MPI 85	62	K7M 800	05/10 →	**D6KMR**		Copper	0.9	04

	kW					CORE		QTY
DACIA								
LOGAN II								
1.2	55	D4F 732	10/12 →	**CT5LDMR9**		Copper	0.9	04
1.2 LPG	55	D4F 734	10/12 →	**CT5LDMR9**		Copper	0.9	04
LOGAN MCV								
1.4	55	K7J 710	02/07 →	**CT6KMR**		Copper	0.8	04
	55	K7J 710	02/07 →	**7LPR**		Nickel	0.8	04
1.6	64	K7M 710	02/07 →	**CT6KMR**		Copper	0.8	04
	64	K7M 710	02/07 →	**7LPR**		Nickel	0.8	04
1.6 16V	77	K4M 690	02/07 →	**CT6KMR**		Copper	0.8	04
	77	K4M 696	02/07 →	**7LPR**		Nickel	0.8	04
1.6 16V Hi-Flex	77	K4M 690	11/09 →	**CT6KMR**		Copper	0.8	04
	77	K4M 690	11/09 →	**7LPR**		Nickel	0.8	04
1.6 Bifuel	64	K7M 710	11/08 →	**D6KMR**		Copper	0.9	04
1.6 MPI 85	62	K7M 800	05/10 →	**D6KMR**		Copper	0.9	04
LOGAN MCV II								
1.2	54	D4F 732	05/15 →	**CT5LDMR9**		Copper	0.9	04
	55	D4F 732	02/13 →	**CT5LDMR9**		Copper	0.9	04
1.2 LPG	55	D4F 734	02/13 →	**CT5LDMR9**		Copper	0.9	04
LOGAN Pick-up								
1.4	55	K7J 710	01/09 →	**7LPR**		Nickel	0.8	04
	55	K7J 710	01/09 →	**CT6KMR**		Copper	0.8	04
1.6	64	K7M 710	03/08 →	**CT6KMR**		Copper	0.8	04
	64	K7M 710	03/08 →	**7LPR**		Nickel	0.8	04
1.6 Bifuel	62	K7M 800	05/10 →	**CT6KMR**		Copper	0.8	04
	62	K7M 800	05/10 →	**7LPR**		Nickel	0.8	04
1.6 MPI 85	62	K7M 800	05/10 →	**CT6KMR**		Copper	0.8	04
	62	K7M 800	05/10 →	**7LPR**		Nickel	0.8	04
NOVA								
1.4	48	C2J	04/96 → 03/01	**CT5FMR**		Copper	0.8	04
	48	-	04/96-> 03/01	**CW7NP**		Nickel	0.8	04
SANDERO								
1.2 16V	55	D4F 732	11/08 →	**CT5LDMR9**		Copper	0.9	04
1.2 16V LPG	55	D4F 732	11/08 →	**CT5LDMR9**		Copper	0.9	04
1.4	55	K7J 710	06/08 →	**D6KMR**		Copper	0.9	04
1.4 MPI LPG	53	K7J 714	01/09 →	**D6KMR**		Copper	0.9	04
1.6	64	K7M 710	06/08 →	**D6KMR**		Copper	0.9	04
1.6 16V Bifuel	77	K4M 690	01/11 →	**7LPR**		Nickel	0.8	04
	77	K4M 696	01/11 →	**7LPR**		Nickel	0.8	04
	77	K4M 694	01/11 →	**7LPR**		Nickel	0.8	04
	77	K4M 690	01/11 →	**CT6KMR**		Copper	0.8	04
	77	K4M 696	01/11 →	**CT6KMR**		Copper	0.8	04
	77	K4M 694	01/11 →	**CT6KMR**		Copper	0.8	04
1.6 MPI 85	62	K7M 800	05/10 →	**D6KMR**		Copper	0.9	04

	kW					CORE		QTY
DACIA								
SANDERO II								
1.2	54	D4F 732	05/15 →	**CT5LDMR9**		Copper	0.9	04
	55	D4F 732	10/12 →	**CT5LDMR9**		Copper	0.9	04
1.2 LPG	55	D4F 732	10/12 →	**CT5LDMR9**		Copper	0.9	04
SOLENZA								
1.4 (B41A, B41B, B41C)	55	E7J 262	02/03 →	**7LPR**		Nickel	0.8	04
	55	E7J 262	02/03 →	**CT6KMR**		Copper	0.8	04
DAEWOO								
CIELO								
1.5	44	G15MF	08/96 → 08/97	**CW7LPR**		Nickel	0.8	04
	44	G15MF	08/96 → 08/97	**CT6FMR**		Copper	0.8	04
	52	G15MF	02/95 → 08/97	**CW7LPR**		Nickel	0.8	04
	52	G15MF	02/95 → 08/97	**CT6FMR**		Copper	0.8	04
	55	G15MF	02/95 → 08/97	**CT6FMR**		Copper	0.8	04
	55	Y15L	04/95 → 07/97	**CW7LPR**		Nickel	0.8	04
	66	V15L	06/94 → 07/98	**CT6KMR11**		Copper	1.1	04
1.5 16V	66	A15MF	02/95 → 08/97	**CT6KMR11**		Copper	1.1	04
ESPERO								
1.5 16V	65	A15MF	10/93 → 09/94	**CT6KMR11**		Copper	1.1	04
1.8	66	C18LE	02/95 → 09/99	**CT6FMR**		Copper	0.8	04
	66	C18LE	02/95 → 09/99	**CW7LPR**		Nickel	0.8	04
	70	C18LE	02/95 → 06/99	**CT6FMR**		Copper	0.8	04
	70	C18LE	02/95 → 06/99	**CW7LPR**		Nickel	0.8	04
2.0	74	C20LZ	10/91 → 09/93	**CT6FMR**		Copper	0.8	04
	74	C20LZ	10/91 → 09/93	**CW7LPR**		Nickel	0.8	04
	77	C20LE	02/95 → 06/99	**CT6FMR**		Copper	0.8	04
	77	C20LE	02/95 → 06/99	**CW7LPR**		Nickel	0.8	04
	81	C20LE	10/93 → 09/94	**CT6FMR**		Copper	0.8	04
	81	C20LE	10/93 → 09/94	**CW7LPR**		Nickel	0.8	04
2.0 DLX	77	C20LE	02/95 → 06/99	**CT6FMR**		Copper	0.8	04
	77	C20LE	02/95 → 06/99	**CW7LPR**		Nickel	0.8	04
EVANDA								
2.0	96	X 20 SED	08/02 →	**D6KMR**	→ 05/05	Copper	0.9	04
	96	L88	08/02 →	**D6KMR**	→ 05/05	Copper	0.9	04
GENTRA								
1.2 SE	53	B12S1	11/02 → 04/05	**CT5FMR**		Copper	0.8	04
1.4	69	F14D3	05/05 →	**CT6KMR11**		Copper	1.1	04
1.4 SR	69	F14D3	05/03 → 04/05	**CT6KMR11**		Copper	1.1	04
1.5 SE	62	A15SMS	11/02 → 04/05	**CW7LPR**		Nickel	0.8	04
	62	A15SMS	11/02 → 04/05	**CT6FMR**		Copper	0.8	04
1.6 E-Tec LS	77	F16D3	05/05 →	**CT6KMR11**		Copper	1.1	04

	kW					CORE		QTY
DAEWOO								
KALOS								
1.2	53	F12S3	04/03 →	**CT5FMR**		Copper	0.8	04
	53	B12S1	04/03 →	**CT5FMR**		Copper	0.8	04
1.4	69	F14D3	05/03 → 12/04	**CT6KMR11**		Copper	1.1	04
	61	F14S3	09/02 →	**CT6FMR**		Copper	0.8	04
	61	F14S3	09/02 →	**CW7LPR**		Nickel	0.8	04
1.4 16V	69	F14D3	04/03 →	**CT6KMR11**		Copper	1.1	04
KONDOR								
2.0 16V	93	T20SED	07/00 → 04/04	**D6KMR**	→ 01/03	Copper	0.9	04
	98	X 20 SED	06/97 → 12/02	**D6KMR**		Copper	0.9	04
	100	T22SED	04/99 → 12/02	**D6KMR**		Copper	0.9	04
KORANDO								
2.0 16V	94	M 161.950	02/99 →	**YJT6KMR**		Copper	1.0	04
2.3	105	M 161.970	01/99 →	**YJT6KMR**	→ 07/05	Copper	1.0	04
3.2 4x4	156	M 104.995	01/99 →	**CT5KMMR**	→ 07/05	Copper	0.8	06
LACETTI								
1.4	70	F14D3	02/04 →	**D6KMR**		Copper	0.9	04
1.5 SE	81	A15DMS	04/98 → 05/99	**CT6KMR11**		Copper	1.1	04
1.5 SX	63	A15SMS	04/97 → 05/99	**CW7LPR**		Nickel	0.8	04
	63	A15SMS	04/97 → 05/99	**CT6FMR**		Copper	0.8	04
1.6	80	F16D3	02/04 →	**CT6KMR11**		Copper	1.1	04
1.8	90	T18SED	02/04 →	**D6KMR**		Copper	0.9	04
LANOS								
1.3	55	A13SMS	05/97 →	**CT6FMR**	→ 07/05	Copper	0.8	04
	55	A14SMS	05/97 →	**CT6FMR**	→ 07/05	Copper	0.8	04
	55	A14SMS	05/97 →	**CW7LPR**	→ 07/05	Nickel	0.8	04
1.3 Lanos / Sens	55	A13SMS	05/97 →	**CT6FMR**	→ 07/05	Copper	0.8	04
	55	A14SMS	05/97 →	**CT6FMR**	→ 07/05	Copper	0.8	04
1.5	63	A15SMS	05/97 →	**CT6FMR**	→ 07/05	Copper	0.8	04
	63	A15SMS	05/97 →	**CW7LPR**	→ 07/05	Nickel	0.8	04
	73	A15SMS	10/97 → 06/99	**CT6FMR**		Copper	0.8	04
	73	A15SMS	10/97 → 06/99	**CW7LPR**		Nickel	0.8	04
1.6 16V	78	A16DMS	05/97 →	**CT6KMR11**	→ 07/05	Copper	1.1	04
LEGANZA								
2.0 16V	93	T20SED	07/00 → 04/04	**D6KMR**	→ 01/03	Copper	0.9	04
	98	X 20 SED	06/97 → 12/02	**D6KMR**		Copper	0.9	04
2.2 16V	100	T22SED	04/99 → 12/02	**D6KMR**		Copper	0.9	04
MATIZ								
1.0	47	B10S	01/03 →	**CT5FMR**	→ 02/05	Copper	0.8	04
MUSSO								
2.3	103	M 111.970	01/99 →	**YJT6KMR**	→ 07/05	Copper	1.0	04
3.2 4x4	162	M 104.992	01/99 →	**CT5KMMR**		Copper	0.8	06

	kW					CORE		QTY
DAEWOO								
NEXIA								
1.5	44	G15MF	08/96 → 08/97	**CT6FMR**		Copper	0.8	04
	44	G15MF	08/96 → 08/97	**CW7LPR**		Nickel	0.8	04
	52	G15MF	02/95 → 08/97	**CT6FMR**		Copper	0.8	04
	52	G15MF	02/95 → 08/97	**CW7LPR**		Nickel	0.8	04
	55	G15MF	02/95 → 08/97	**CT6FMR**		Copper	0.8	04
	55	G15MF	02/95 → 08/97	**CW7LPR**		Nickel	0.8	04
	59	Y15L	07/08 →	**CT6FMR**		Copper	0.8	04
	59	Y15L	07/08 →	**CW7LPR**		Nickel	0.8	04
1.5 16V	66	A15MF	02/95 → 08/97	**CT6KMR11**		Copper	1.1	04
1.6	80	F16D3	07/08 →	**CT6KMR11**		Copper	1.1	04
NUBIRA								
1.5 SE	81	A15DMS	06/99 → 07/03	**CT6KMR11**		Copper	1.1	04
1.6	76	A16DMS	08/02 → 07/03	**CT6KMR11**		Copper	1.1	04
	80	F16D3	07/03 →	**CT6KMR11**		Copper	1.1	04
1.6 16V	66	A16SMS	06/97 →	**CT6KMR11**		Copper	1.1	04
	76	A16DMS	12/00 →	**CT6KMR11**		Copper	1.1	04
	78	A16DMS	05/97 →	**CT6KMR11**		Copper	1.1	04
1.8	90	T18SED	07/03 →	**D6KMR**	→ 07/05	Copper	0.9	04
2.0 16V	93	T20SED	12/00 →	**D6KMR**	→ 09/04	Copper	0.9	04
	98	Z20L	05/97 →	**D6KMR**	→ 06/03	Copper	0.9	04
	98	X 20 SED	05/97 →	**D6KMR**	→ 06/03	Copper	0.9	04
ORION								
1.6	76	A16DMS	08/02 → 07/03	**CT6KMR11**		Copper	1.1	04
1.6 16V	66	A16SMS	06/97 →	**CT6KMR11**		Copper	1.1	04
	76	A16DMS	12/00 →	**CT6KMR11**		Copper	1.1	04
	78	A16DMS	05/97 →	**CT6KMR11**		Copper	1.1	04
2.0 16V	93	T20SED	12/00 →	**D6KMR**	→ 09/04	Copper	0.9	04
	98	Z20L	05/97 →	**D6KMR**	→ 06/03	Copper	0.9	04
	98	X 20 SED	05/97 →	**D6KMR**	→ 06/03	Copper	0.9	04
REXTON								
2.3 RX230 4x4	110	M 161.974	05/02 →	**YJT6KMR**		Copper	1.0	04
REZZO								
1.6	77	A16DMS	09/00 →	**CT6KMR11**		Copper	1.1	04
1.8	72	A18DMS	09/00 →	**CT6FMR**	→ 07/05	Copper	0.8	04
	74	F18S2	09/00 →	**CW7LPR**	→ 07/05	Nickel	0.8	04
2.0	89	X 20 SED	09/01 →	**D6KMR**	→ 07/05	Copper	0.9	04
	94	T20SED	09/00 →	**D6KMR**	→ 07/05	Copper	0.9	04
TACUMA								
1.6	77	A16DMS	09/00 →	**CT6KMR11**		Copper	1.1	04
1.8	72	A18DMS	09/00 →	**CT6FMR**	→ 07/05	Copper	0.8	04
	74	F18S2	09/00 →	**CW7LPR**	→ 07/05	Nickel	0.8	04
2.0	89	X 20 SED	09/01 →	**D6KMR**	→ 07/05	Copper	0.9	04
	94	T20SED	09/00 →	**D6KMR**	→ 07/05	Copper	0.9	04
TICO								
0.8	35	F8C	02/95 → 12/00	**CT5FMR**		Copper	0.8	03

	kW					CORE		QTY
DAIHATSU								
APPLAUSE								
1.6 16V (A101)	66	HD	06/89 → 07/97	**CT6KMR11**	→ 06/92	Copper	1.1	04
BEGO								
1.3 VVT-i	63	K3-VE	11/05 →	**YJT6KMR**		Copper	1.0	04
1.3 VVT-i 4x4	63	K3-VE	11/05 →	**YJT6KMR**		Copper	1.0	04
CHARADE III								
1.3	66	HCE	11/90 → 02/93	**CT6KMR11**		Copper	1.1	04
CHARADE IV								
1.3 16V	55	HCE	05/96 → 11/99	**CT6KMR11**		Copper	1.1	04
1.5 16V	55	HEE	10/94 →	**CT6KMR11**		Copper	1.1	04
1.5 HG	55	HEE	06/94 → 03/96	**CT6KMR11**		Copper	1.1	04
	55	HEEG	06/94 → 03/96	**CT6KMR11**		Copper	1.1	04
1.5 i 16V	66	HEE	01/97 → 11/99	**CT6KMR11**		Copper	1.1	04
	66	HEEG	01/97 → 11/99	**CT6KMR11**		Copper	1.1	04
CUORE V								
1.0 i (L701)	41	EJ-VE	10/98 → 05/03	**CT5KMMR11**		Copper	1.1	03
CUORE VI								
1.0 i (L701)	41	EJ-DE	10/98 → 05/03	**CT5KMMR11**		Copper	1.1	03
FEROZA Hard Top								
1.6 16V 4WD	63	HDC	10/88 → 12/99	**CT6KMR11**	→ 12/97	Copper	1.1	04
1.6 SX 16V 4WD	63	HDC	10/88 → 12/99	**CT6KMR11**	→ 12/97	Copper	1.1	04
1.6 i 16V 4x4	70	HD-E	10/88 → 12/99	**CT6KMR11**	→ 12/97	Copper	1.1	04
FEROZA Soft Top								
1.6 16V	63	HDC	10/88 → 12/99	**CT6KMR11**	→ 12/97	Copper	1.1	04
1.6 i 16V	70	HD-E	10/88 → 12/99	**CT6KMR11**	→ 12/97	Copper	1.1	04
GRAN MOVE								
1.5 16V (G303)	66	HEEG	10/96 → 07/98	**CT6KMR11**		Copper	1.1	04
1.6 16V (G301)	67	HDEP	05/98 →	**CT6KMR11**	→ 07/02	Copper	1.1	04
HIJET Pick-up								
1.3	48	HCE	06/98 →	**CT6KMR11**		Copper	1.1	04
	52	HCE	06/98 →	**CT6KMR11**		Copper	1.1	04
MIRA V								
1.0 i (L701)	41	EJ-DE	10/98 → 05/03	**CT5KMMR11**		Copper	1.1	03
MOVE								
1.0 i	41	EJ-DE	10/98 →	**CT5KMMR11**		Copper	1.1	03
PYZAR								
1.5 16V (G303)	66	HEEG	10/96 → 07/98	**CT6KMR11**		Copper	1.1	04
1.6 16V (G301)	67	HDEP	05/98 →	**CT6KMR11**	→ 07/02	Copper	1.1	04
SIRION								
1.0	40	EJ-DE	04/98 → 10/00	**CT5KMMR11**		Copper	1.1	03
1.0 i (M100)	41	EJ-DE	04/98 → 09/00	**CT5KMMR11**		Copper	1.1	03
1.0 i 4WD	41	EJ-DE	04/99 → 09/00	**CT5KMMR11**		Copper	1.1	03
1.3 Sport 4WD	75	K3-VE2	08/00 → 03/05	**YJT6KMR**		Copper	1.0	04

	kW					CORE		QTY
DAIHATSU								
SPORTRAK								
1.6 16V	63	HDC	10/88 → 12/99	**CT6KMR11**	→ 12/97	Copper	1.1	04
1.6 16V 4WD	63	HDC	10/88 → 12/99	**CT6KMR11**	→ 12/97	Copper	1.1	04
1.6 i 16V	70	HD-E	10/88 → 12/99	**CT6KMR11**	→ 12/97	Copper	1.1	04
1.6 i 16V 4x4	70	HD-E	10/88 → 12/99	**CT6KMR11**	→ 12/97	Copper	1.1	04
1.6 SX 16V 4WD	63	HDC	10/88 → 12/99	**CT6KMR11**	→ 12/97	Copper	1.1	04
STORIA								
1.0	40	EJ-DE	04/98 → 10/00	**CT5KMMR11**		Copper	1.1	03
1.0 i (M100)	41	EJ-DE	04/98 → 09/00	**CT5KMMR11**		Copper	1.1	03
1.0 i 4WD	41	EJ-DE	04/99 → 09/00	**CT5KMMR11**		Copper	1.1	03
1.3 Sport 4WD	75	K3-VE2	08/00 → 03/05	**YJT6KMR**		Copper	1.0	04
TARUNA								
1.3	63	K3-VE	09/01 → 10/05	**YJT6KMR**		Copper	1.0	04
1.3 4WD	63	K3-VE	10/00 → 10/05	**YJT6KMR**		Copper	1.0	04
TERIOS								
0.7	44	EF-DEM	09/00 →	**D6KMR**		Copper	0.9	03
0.7 4WD	44	EF-DEM	05/97 → 08/00	**D6KMR**		Copper	0.9	03
1.3	63	K3-VE	09/01 → 10/05	**YJT6KMR**		Copper	1.0	04
1.3 4WD	63	K3-VE	10/00 → 10/05	**YJT6KMR**		Copper	1.0	04
1.3 VVT-i	63	K3-VE	11/05 →	**YJT6KMR**		Copper	1.0	04
1.3 VVT-i 4x4	63	K3-VE	11/05 →	**YJT6KMR**		Copper	1.0	04
VALERA IV								
1.5 16V	55	HEE	10/94 →	**CT6KMR11**		Copper	1.1	04
1.5 i 16V	66	HEE	08/94 →	**CT6KMR11**		Copper	1.1	04
YRV								
1.3	64	K3-VE	02/01 →	**YJT6KMR**	→ 07/05	Copper	1.0	04
DODGE								
CARAVAN								
2.4 i	111	EDZ	01/95 → 03/01	**CT5KMR11**		Copper	1.1	04
3.0	112	EFA	01/95 → 03/01	**CT5FMR**		Copper	0.8	06
NEON								
2.0 Highline	98	ECB	01/94 → 09/99	**7LPR**		Nickel	0.8	04
2.0 16V	98	ECB	05/94 → 08/99	**CT6KMR**		Copper	0.8	04
NEON II								
2.0 16V	98	ECB	08/99 →	**7LPR**		Nickel	0.8	04
	98	ECB	08/99 →	**CT6KMR**		Copper	0.8	04
STRATUS								
2.0 16V	98	ECB	12/95 → 04/01	**7LPR**		Nickel	0.8	04
	98	ECB	12/95 → 04/01	**CT6KMR**		Copper	0.8	04
2.4 16V	103	EDZ	12/95 → 04/01	**CT5KMR11**		Copper	1.1	04
	112	EDZ	12/95 → 04/01	**CT5KMR11**		Copper	1.1	04

	kW					CORE		QTY
DR								
DR 1								
1.0	50	SQR472F	03/10 →	**7LPR**		Nickel	0.8	04
1.0 Bifuel	50	SQR472F	03/10 →	**CT6KMR**		Copper	0.8	04
1.0 LPG	50	SQR472F	03/10 →	**7LPR**		Nickel	0.8	04
1.3	61	SQR473	03/10 →	**CT6KMR**		Copper	0.8	04
1.3 Bifuel	61	SQR473	03/10 →	**7LPR**		Nickel	0.8	04
1.3 LPG	61	SQR473	03/10 →	**CT6KMR**		Copper	0.8	04
DR 2								
1.3	61	SQR473	09/10 →	**7LPR**		Nickel	0.8	04
1.3 Bifuel	61	SQR473	09/10 →	**CT6KMR**		Copper	0.8	04
1.3 LPG	61	SQR473	09/10 →	**7LPR**		Nickel	0.8	04
	61	SQR473	09/10 →	**CT6KMR**		Copper	0.8	04
DR 5								
1.6	80	SQR481F	01/11 →	**7LPR**		Nickel	0.8	04
	87	SQR481F	01/11 →	**7LPR**		Nickel	0.8	04
	87	SQR481F	01/11 →	**CT6KMR**		Copper	0.8	04
1.6 Bifuel	80	SQR481F	09/10 →	**CT6KMR**		Copper	0.8	04
1.6 LPG	80	SQR481F	01/11 →	**7LPR**		Nickel	0.8	04
	80	SQR481F	01/11 →	**CT6KMR**		Copper	0.8	04
1.8	97	SQR481FC	01/11 →	**7LPR**		Nickel	0.8	04
	97	SQR481FC	01/11 →	**CT6KMR**		Copper	0.8	04
2.0	94	SQR484F	01/11 →	**7LPR**		Nickel	0.8	04
	102	SQR484F	01/11 →	**7LPR**		Nickel	0.8	04
2.0 4WD	102	SQR484F	01/11 →	**CT6KMR**		Copper	0.8	04
2.0 Bifuel	94	SQR484F	01/11 →	**CT6KMR**		Copper	0.8	04
2.0 LPG	94	SQR484F	01/11 →	**7LPR**		Nickel	0.8	04
	94	SQR484F	01/11 →	**CT6KMR**		Copper	0.8	04

FIAT								
126 (126_)								
700	19	126 A2.000	09/87 → 06/96	**CW7LPR**	→ 12/93	Nickel	0.8	02
	19	126 A2.048	09/87 → 06/96	**CT6FMR**	→ 12/93	Copper	0.8	02
500 (312_)								
1.2	51	169 A4.000	10/07 →	**CT7DKMR**		Copper	0.8	04
1.4	74	169 A3.000	10/07 →	**CT7DKMR**		Copper	0.8	04
1.4 Sport	74	169 A3.000	10/07 →	**CT7DKMR**		Copper	0.8	04
500 C (312_)								
1.2	51	169 A4.000	09/09 →	**CT7DKMR**		Copper	0.8	04
1.4	74	169 A3.000	09/09 →	**CT7DKMR**		Copper	0.8	04
	75	EAB	09/11 →	**CT7DKMR**		Copper	0.8	04
	75	169 A3.000	09/11 →	**CT7DKMR**		Copper	0.8	04
500L (199_)								
1.4	70	843 A1.000	09/12 →	**CT7DKMR**		Copper	0.8	04
ALBEA (172_)								
1.4	57	178 F3.011	11/07 →	**CT5KMMR**		Copper	0.8	04

	kW					CORE		QTY
FIAT								
ALBEA (178_)								
1.2	44	178 C4.066	09/01 →	**CT5KMMR**		Copper	0.8	04
	44	188 A4.000	09/01 →	**CT5KMMR**		Copper	0.8	04
	54	178 B5.000	09/98 →	**CT5KMMR**		Copper	0.8	04
	59	188 A5.000	09/01 →	**CT8DKMR**		Copper	0.8	04
1.2 ELX Fire 16V	59	188 A5.000	09/01 →	**CT8DKMR**		Copper	0.8	04
1.4	57	350 A1.000	01/07 →	**CT5KMMR**		Copper	0.8	04
	57	178 F3.011	01/07 →	**CT5KMMR**		Copper	0.8	04
1.4 ELX RST II Flex	60	178 F3.011	06/04 → 10/07	**CT5KMMR**		Copper	0.8	04
1.4 Flex	60	178 F3.011	06/04 → 10/07	**CT5KMMR**		Copper	0.8	04
1.6	76	182 B6.000	11/00 →	**CT5KMMR**		Copper	0.8	04
1.6 16V	78	178 B3.000	09/98 →	**CT5KMMR11**		Copper	1.1	04
BRAVA (182_)								
1.2 16V	64	182 B2.000	12/98 → 12/02	**CT8DKMR**		Copper	0.8	04
1.2 16V 80	59	188 A5.000	10/00 → 10/01	**CT8DKMR**		Copper	0.8	04
	60	182 B2.000	12/98 → 12/02	**CT8DKMR**		Copper	0.8	04
1.6 16V (182.BU)	76	182 B6.000	01/99 → 12/02	**CT5KMMR**		Copper	0.8	04
BRAVO I (182_)								
1.2 16V 80	59	188 A5.000	10/00 → 10/01	**CT8DKMR**		Copper	0.8	04
	60	182 B2.000	12/98 → 10/00	**CT8DKMR**		Copper	0.8	04
	64	182 B2.000	12/98 → 10/01	**CT8DKMR**		Copper	0.8	04
1.6	76	182 B6.000	09/00 → 10/01	**CT5KMMR**		Copper	0.8	04
BRAVO II (198_)								
1.4	66	192 B2.000	04/07 →	**CT7DKMR**		Copper	0.8	04
1.4 LPG	66	192 B2.000	11/09 →	**CT7DKMR**		Copper	0.8	04
CINQUECENTO (170_)								
0.7 (170AA)	23	170 A.000	12/91 → 01/96	**CW7LPR**		Nickel	0.8	02
	23	170 A.000	12/91 → 01/96	**CT6FMR**		Copper	0.8	02
0.7 i (170AD)	22	170 A.046	07/94 → 01/98	**CW7LPR**		Nickel	0.8	02
	22	170 A.046	07/94 → 01/98	**CT6FMR**		Copper	0.8	02
0.9 (170AB)	30	170 A1.000	07/91 → 12/93	**CW7LPR**		Nickel	0.8	04
	30	170 A1.000	07/91 → 12/93	**CT6FMR**		Copper	0.8	04
0.9 i.e. (170AC)	30	170 A1.046	07/91 → 12/93	**CW7LPR**		Nickel	0.8	04
	30	170 A1.046	07/91 → 12/93	**CT6FMR**		Copper	0.8	04
0.9 i.e. S (170AF, 170CF)	29	1170 A1.000	07/91 → 07/99	**CW7LPR**		Nickel	0.8	04
	29	1170 A1.046	07/91 → 07/99	**CW7LPR**		Nickel	0.8	04
	29	1170 A1.000	07/91 → 07/99	**CT6FMR**		Copper	0.8	04
	29	1170 A1.046	07/91 → 07/99	**CT6FMR**		Copper	0.8	04
COUPE (175_)								
2.0 20V Turbo	162	175 A3.000	08/96 → 08/00	**YJT6KMR**		Copper	1.0	05
CROMA (154_)								
2000 i.e. Turbo (154.AM, 154.LM)	110	154 C4.046	06/87 → 08/96	**CJT6FMR**		Copper	0.8	04
	110	834 C.146	06/87 → 08/96	**CJT6FMR**		Copper	0.8	04
CROMA (194_)								
1.8 16V	103	939 A4.000	12/05 →	**A5KMR**		Copper	1.1	04

	kW					CORE		QTY
FIAT								
DOBLO Cargo (223_)								
1.2 (223ZXA1A)	48	223 A5.000	03/01 →	**CT5KMMR**	→ 01/04	Copper	0.8	04
1.4	57	350 A1.000	10/05 →	**CT7DKMR**		Copper	0.8	04
1.4	70	843 A1.000	02/10 →	**CT7DKMR**		Copper	0.8	04
1.6 16V (223ZXD1A)	76	182 B6.000	10/01 →	**CT5KMMR**	→ 12/03	Copper	0.8	04
DOBLO MPV (119_, 223_)								
1.2 (223AXA1A)	48	223 A5.000	03/01 →	**CT5KMMR**	→ 01/04	Copper	0.8	04
1.4	57	350 A1.000	10/05 →	**CT7DKMR**		Copper	0.8	04
1.6	68	182 B6.000	09/02 →	**CT5KMMR**		Copper	0.8	04
1.6 16V (223AXD1A)	76	182 B6.000	10/01 →	**CT5KMMR**	→ 12/05	Copper	0.8	04
1.6 Natural Power	76	182 B6.000	09/02 →	**CT5KMMR**	01/04 → 12/05	Copper	0.8	04
DOBLO MPV (263_)								
1.4	70	843 A1.000	02/10 →	**CT7DKMR**		Copper	0.8	04
DUCATO (230_)								
2.0	80	RFW	06/98 → 04/02	**CT6KMMR**		Copper	0.8	04
	80	RFW	03/94 → 04/02	**CT6KMMR**		Copper	0.8	04
2.0 4x4	80	RFW	11/94 → 11/01	**CT6KMMR**		Copper	0.8	04
2.0 Panorama/ Combinato	80	RFW	03/94 → 04/02	**CT6KMMR**		Copper	0.8	04
DUCATO (244_)								
2.0	81	RFL	04/02 → 07/06	**CT6KMR**		Copper	0.8	04
	81	RFL	04/02 →	**7LPR**	→ 06/06	Nickel	0.8	04
2.0 4x4	81	RFL	05/02 → 07/06	**7LPR**		Nickel	0.8	04
	81	RFL	05/02 → 07/06	**CT6KMR**		Copper	0.8	04
2.0 Bipower	81	RFL	11/02 →	**7LPR**	→ 06/06	Nickel	0.8	04
	81	RFL	11/02 →	**CT6KMR**	→ 06/06	Copper	0.8	04
DUCATO (280_)								
2.0	62	170 D	03/89 → 08/90	**CT5FMR**	07/90 →	Copper	0.8	04
DUCATO (290_)								
2.0	63	170 D	06/90 → 05/94	**CT5FMR**		Copper	0.8	04
	62	170 D	07/90 → 03/94	**CT5FMR**		Copper	0.8	04
2.0 4x4	63	170 D	06/90 → 05/94	**CT5FMR**		Copper	0.8	04
DUNA (146_)								
60 1.1	43	146 A6.000	01/87 → 12/91	**CT6FMR**		Copper	0.8	04
70	49	146 A5.000	01/87 → 12/91	**CW7LPR**		Nickel	0.8	04
70 1.3	49	146 A5.000	01/87 → 12/91	**CW7LPR**		Nickel	0.8	04
	49	146 A5.000	01/87 → 12/91	**CT6FMR**		Copper	0.8	04
DUNA Weekend (146_)								
60 1.1	43	146 A6.000	01/87 → 12/91	**CW7LPR**		Nickel	0.8	04
70 1.3	49	146 A5.000	01/87 → 12/91	**CW7LPR**		Nickel	0.8	04
EGEA (356_)								
1.4	70	843 A1.000	10/15 →	**CT7DKMR**		Copper	0.8	04

	kW					CORE		QTY
FIAT								
FIORINO (146_)								
60 1.1	40	146 A9.000	05/88 → 12/93	**CW7LPR**		Nickel	0.8	04
70 1.3	49	146 A5.000	01/88 → 12/94	**CT6FMR**		Copper	0.8	04
70 i.e. 1.4	49	146 C5.000	05/94 → 05/01	**CW7LPR**		Nickel	0.8	04
	49	146 C5.000	05/94 → 05/01	**CT6FMR**		Copper	0.8	04
FIORINO (147_)								
1.3	49	146 A5.000	12/87 → 08/93	**CW7LPR**		Nickel	0.8	04
	49	146 A5.000	12/87 → 08/93	**CT6FMR**		Copper	0.8	04
FIORINO (225_)								
1.4	54	KFT	11/07 →	**7LPR**		Nickel	0.8	04
	54	KFV	11/07 →	**7LPR**		Nickel	0.8	04
	54	KFT	11/07 →	**CT6KMR**		Copper	0.8	04
	57	350 A1.000	10/09 →	**CT7DKMR**		Copper	0.8	04
FIORINO Pick up (146_)								
1.3	49	146 A5.000	01/88 → 12/94	**CT6FMR**		Copper	0.8	04
1.4	49	146 D5.000	05/94 → 05/01	**CT6FMR**		Copper	0.8	04
FIORINO Pick up (147_)								
1.0	41	156 A.000	09/87 → 12/88	**CT6FMR**		Copper	0.8	04
GRANDE PUNTO (199_)								
1.2	48	199 A4.000	10/05 →	**CT7DKMR**		Copper	0.8	04
1.4	55	199 A7.000	06/06 →	**CT7DKMR**		Copper	0.8	04
	57	350 A1.000	10/05 →	**CT7DKMR**		Copper	0.8	04
1.4 16V	70	199 A6.000	10/05 →	**CT7DKMR**		Copper	0.8	04
IDEA (350_)								
1.2 16V	59	188 A5.000	01/04 →	**CT8DKMR**		Copper	0.8	04
1.4	57	350 A1.000	10/05 →	**CT7DKMR**		Copper	0.8	04
	66	192 B2.000	12/03 →	**CT7DKMR**		Copper	0.8	04
1.4 16V	70	843 A1.000	01/04 →	**CT7DKMR**		Copper	0.8	04
LINEA (323_)								
1.4	57	350 A1.000	06/07 →	**CT7DKMR**		Copper	0.8	04
MAREA (185_)								
1.2 16V	60	182 B2.000	10/98 → 05/02	**CT8DKMR**	→ 05/99	Copper	0.8	04
1.6	76	182 B6.000	09/00 → 08/02	**CT5KMMR**		Copper	0.8	04
1.6 100 16V	76	182 A4.000	09/96 → 05/02	**CT5KMMR**		Copper	0.8	04
MULTIPLA (186_)								
1.6	68	182 B6.000	05/04 → 08/05	**CT5KMMR**		Copper	0.8	04
	74	182 B6.000	03/01 → 08/05	**CT5KMMR**		Copper	0.8	04
	76	182 B6.000	09/00 → 06/10	**CT5KMMR**		Copper	0.8	04
1.6 16V (186AGB1A)	70	182 B6.000	04/02 → 06/10	**CT5KMMR**		Copper	0.8	04
1.6 16V Bipower (186AMB1A)	76	186 A4.000	04/99 → 06/10	**CT5KMMR**	→ 06/03	Copper	0.8	04
1.6 16V Bipower (186AXC1A)	76	182 B6.000	10/01 → 06/10	**CT5KMMR**		Copper	0.8	04

	kW					CORE		QTY
FIAT								
MULTIPLA (186_)								
1.6 16V Blupower (186AMA1A)	70	186 A3.000	04/99 → 06/10	**CT5KMMR**	→ 06/03	Copper	0.8	04
PALIO (178_)								
1.2	54	178 B5.000	09/98 →	**CT5KMMR**		Copper	0.8	04
	59	188 A5.000	09/01 →	**CT8DKMR**		Copper	0.8	04
1.2 (178DX.G1A)	54	178 B5.000	04/96 → 02/01	**CT6KMR**		Copper	0.8	04
	54	178 B5.000	04/96 → 02/01	**7LPR**		Nickel	0.8	04
1.2 (178DYA1A)	44	188 A4.000	02/01 →	**CT5KMMR**		Copper	0.8	04
	44	178 C4.066	02/01 →	**CT5KMMR**		Copper	0.8	04
1.2 ELX	59	188 A5.000	09/01 →	**CT8DKMR**		Copper	0.8	04
1.2 ELX Fire 16V	59	188 A5.000	09/01 →	**CT8DKMR**		Copper	0.8	04
1.2 Flex	44	188 A4.000	07/97 → 08/02	**CT5KMMR**		Copper	0.8	04
1.4	57	350 A1.000	01/07 →	**CT5KMMR**		Copper	0.8	04
	57	178 F3.011	01/07 →	**CT5KMMR**		Copper	0.8	04
1.4 ELX Flex	63	310 A2.011	05/08 → 06/12	**CT7DKMR**		Copper	0.8	04
1.4 ELX RST II Flex	60	178 F3.011	06/04 → 10/07	**CT5KMMR**		Copper	0.8	04
1.4 Flex	60	178 F3.011	06/04 → 10/07	**CT5KMMR**		Copper	0.8	04
	63	310 A2.011	05/08 → 06/12	**CT7DKMR**		Copper	0.8	04
1.6	76	182 B6.000	11/00 →	**CT5KMMR**		Copper	0.8	04
1.6 16V	78	178 B3.000	09/98 →	**CT5KMMR11**		Copper	1.1	04
1.6 16V (178DYC1A06)	76	182 B6.000	02/01 →	**CT5KMMR**		Copper	0.8	04
PALIO (178BX)								
1.2	44	178 C4.066	07/97 → 08/02	**CT5KMMR**		Copper	0.8	04
	44	178 B7.045	07/97 → 08/02	**CT5KMMR**		Copper	0.8	04
	44	188 A4.000	07/97 → 08/02	**CT5KMMR**		Copper	0.8	04
1.4	70	834 A1.000	06/03 →	**CT7DKMR**		Copper	0.8	04
PANDA (141_)								
652 cc³ / 0.65 l	22	141 A.000	01/82-> 07/04	**CW7NP**		Nickel	0.8	02
750 Cat (141AM)	25	156 A4.048	01/95 → 10/03	**CT6KMMR**		Copper	0.8	04
900	29	1170 A1.046	04/92 → 12/96	**CW7LPR**		Nickel	0.8	04
	29	1170 A1.046	04/92 → 12/96	**CT6FMR**		Copper	0.8	04
1100	37	156 C.046	05/91 → 12/99	**CT6KMMR**		Copper	0.8	04
	40	176 B2.000	02/95 → 09/03	**CT5KMMR**		Copper	0.8	04
	40	187 A1.000	02/95 → 09/03	**CT5KMMR**		Copper	0.8	04
1000 i.e. Cat	33	141 C2.000	10/87 → 08/98	**CT6KMMR**		Copper	0.8	04
	33	156 A2.246	10/87 → 08/98	**CT6KMMR**		Copper	0.8	04
1100 Trekking 4x4	37	156 C.046	10/91 → 07/04	**CT6KMMR**	→ 12/00	Copper	0.8	04
PANDA (169_)								
1.1	40	187 A1.000	09/03 →	**CT5KMMR**	→ 12/04	Copper	0.8	04
	40	187 A1.000	09/03 →	**CT7DKMR**	→ 12/04	Copper	0.8	04
1.2	44	188 A4.000	09/03 →	**CT5KMMR**	→ 09/04	Copper	0.8	04
	44	188 A4.000	09/03 →	**CT7DKMR**	→ 09/04	Copper	0.8	04
	51	169 A4.000	03/10 →	**CT7DKMR**		Copper	0.8	04

	kW					CORE		QTY
FIAT								
PANDA (169_)								
1.2 4x4	44	188 A4.000	10/04 →	**CT7DKMR**		Copper	0.8	04
	51	169 A4.000	11/09 →	**CT7DKMR**		Copper	0.8	04
1.2 LPG	44	188 A4.000	04/09 →	**CT7DKMR**		Copper	0.8	04
1.2 Natural Power	44	188 A4.000	01/07 → 11/09	**CT7DKMR**		Copper	0.8	04
1.4	74	169 A3.000	10/06 →	**CT7DKMR**		Copper	0.8	04
1.4 Natural Power	51	350 A1.000	01/10 →	**CT7DKMR**		Copper	0.8	04
	57	350 A1.000	09/10 →	**CT7DKMR**		Copper	0.8	04
PANDA (312_, 319_)								
1.2	51	169 A4.000	02/12 →	**CT7DKMR**		Copper	0.8	04
1.2 LPG	51	169 A4.000	06/12 →	**CT7DKMR**		Copper	0.8	04
PANDA Van (141_)								
1.1	37	156 C.046	05/91 → 03/95	**CT6KMMR**		Copper	0.8	04
	40	187 A1.000	09/00 → 02/04	**CT5KMMR**		Copper	0.8	04
1000 i.e	33	156 A2.246	08/92 → 02/04	**CT6KMMR**		Copper	0.8	04
PANDA Van (169_)								
1.1	40	187 A1.000	09/04 →	**CT5KMMR**	→ 12/04	Copper	0.8	04
	40	187 A1.000	09/04 →	**CT7DKMR**	→ 12/04	Copper	0.8	04
1.2	44	188 A4.000	09/04 →	**CT7DKMR**	10/04 →	Copper	0.8	04
	51	169 A4.000	09/10 →	**CT7DKMR**		Copper	0.8	04
1.2 4x4	44	188 A4.000	09/04 →	**CT7DKMR**	10/04 →	Copper	0.8	04
	51	169 A4.000	09/10 →	**CT7DKMR**		Copper	0.8	04
1.2 LPG	51	169 A4.000	09/10 →	**CT7DKMR**		Copper	0.8	04
1.4 Natural Power	57	350 A1.000	10/09 →	**CT7DKMR**		Copper	0.8	04
PETRA (178_)								
1.2	44	178 C4.066	09/01 →	**CT5KMMR**		Copper	0.8	04
	44	188 A4.000	09/01 →	**CT5KMMR**		Copper	0.8	04
	54	178 B5.000	09/98 →	**CT5KMMR**		Copper	0.8	04
	59	188 A5.000	09/01 →	**CT8DKMR**		Copper	0.8	04
1.2 ELX Fire 16V	59	188 A5.000	09/01 →	**CT8DKMR**		Copper	0.8	04
1.4	57	350 A1.000	01/07 →	**CT5KMMR**		Copper	0.8	04
	57	178 F3.011	01/07 →	**CT5KMMR**		Copper	0.8	04
1.4 ELX RST II Flex	60	178 F3.011	06/04 → 10/07	**CT5KMMR**		Copper	0.8	04
1.4 Flex	60	178 F3.011	06/04 → 10/07	**CT5KMMR**		Copper	0.8	04
1.6	76	182 B6.000	11/00 →	**CT5KMMR**		Copper	0.8	04
1.6 16V	78	178 B3.000	09/98 →	**CT5KMMR11**		Copper	1.1	04
PUNTO (176_)								
75	54	176 A8.000	10/93 → 09/99	**CT6KMMR**		Copper	0.8	04
55 1.1	40	176 A6.000	09/93 → 09/99	**7LPR**		Nickel	0.8	04
	40	176 B2.000	09/93 → 09/99	**7LPR**		Nickel	0.8	04
	40	176 A6.000	09/93 → 09/99	**CT6KMR**		Copper	0.8	04
	40	176 B2.000	09/93 → 09/99	**CT6KMR**		Copper	0.8	04
	40	176 A6.000	09/93 → 09/99	**CT6KMMR**		Copper	0.8	04
	40	176 B2.000	09/93 → 09/99	**CT6KMMR**		Copper	0.8	04

	kW					CORE		QTY
FIAT								
PUNTO (176_)								
60 1.2	43	176 A7.000	01/94 → 09/99	**CT6KMMR**		Copper	0.8	04
	44	176 B4.000	03/94 → 09/99	**CT6KMMR**		Copper	0.8	04
	44	176 B1.000	03/94 → 09/99	**CT6KMMR**		Copper	0.8	04
75 1.2	54	176 A8.000	10/93 → 09/99	**CT6KMMR**		Copper	0.8	04
1.2 16V	63	176 B9.000	04/97 → 09/99	**CT8DKMR**		Copper	0.8	04
PUNTO (188_)								
1.2 16V 80 (188.233, .235, .253, .255, .333, .353, .639...)	59	188 A5.000	09/99 →	**CT8DKMR**		Copper	0.8	04
1.2 60 (188.030, .050, .130, .150, .230, .250)	44	188 A4.000	09/99 →	**CT5KMMR**		Copper	0.8	04
1.2 Bifuel	44	188 A4.000	08/07 →	**CT7DKMR**		Copper	0.8	04
1.2 Natural Power	44	188 A4.000	09/03 →	**CT5KMMR**	→ 09/04	Copper	0.8	04
	44	188 A4.000	09/03 →	**CT7DKMR**	→ 09/04	Copper	0.8	04
1.4	70	843 A1.000	09/03 →	**CT8DKMR**		Copper	0.8	04
	71	199 A6.000	11/05 →	**CT7DKMR**		Copper	0.8	04
PUNTO (199_)								
1.2	48	199 A4.000	10/05 →	**CT7DKMR**		Copper	0.8	04
	51	169 A4.000	03/12 →	**CT7DKMR**		Copper	0.8	04
1.4	55	199 A7.000	03/12 →	**CT7DKMR**		Copper	0.8	04
	55	199 A7.000	06/06 →	**CT7DKMR**		Copper	0.8	04
	57	350 A1.000	10/05 →	**CT7DKMR**		Copper	0.8	04
	57	350 A1.000	03/12 →	**CT7DKMR**		Copper	0.8	04
1.4 16V	70	199 A6.000	10/05 →	**CT7DKMR**		Copper	0.8	04
PUNTO Cabriolet (176_)								
60 1.2	43	176 A7.000	04/94 → 06/00	**CT6KMMR**		Copper	0.8	04
	44	176 B1.000	05/95 → 06/00	**CT6KMMR**		Copper	0.8	04
	44	176 B4.000	05/95 → 06/00	**CT6KMMR**		Copper	0.8	04
85 16V 1.2	63	176 B9.000	04/97 → 06/00	**CT8DKMR**		Copper	0.8	04
PUNTO EVO (199_)								
1.2	48	199 A4.000	10/09 → 02/12	**CT7DKMR**		Copper	0.8	04
	51	169 A4.000	10/09 → 02/12	**CT7DKMR**		Copper	0.8	04
1.4	55	199 A7.000	07/09 → 02/12	**CT7DKMR**		Copper	0.8	04
	57	350 A1.000	10/09 → 02/12	**CT7DKMR**		Copper	0.8	04
PUNTO Van (176_)								
1.1	40	176 B2.000	04/96 → 02/00	**CT6KMR**		Copper	0.8	04
PUNTO Van (188_)								
1.2 60	44	188 A4.000	02/00 → 10/09	**CT5KMMR**	→ 09/04	Copper	0.8	04
	44	188 A4.000	02/00 → 10/09	**CT7DKMR**	→ 09/04	Copper	0.8	04
PUNTO Van (199_)								
1.4	57	350 A1.000	04/08 →	**CT7DKMR**		Copper	0.8	04

	kW					CORE		QTY
FIAT								
QUBO (225_)								
1.4	54	KFV	02/08 →	**7LPR**		Nickel	0.8	04
	54	KFT	02/08 →	**CT6KMR**		Copper	0.8	04
	57	350 A1.000	10/09 →	**CT7DKMR**		Copper	0.8	04
REGATA (138_)								
90 i.e. 1.6	66	149 C2.000	01/87 → 07/89	**CW7LPR**		Nickel	0.8	04
	66	149 C2.000	01/87 → 07/89	**CT6FMR**		Copper	0.8	04
100 i.e. 1.6	74	149 C3.000	01/87 → 12/90	**CT6FMR**		Copper	0.8	04
RITMO III (198_)								
1.4	66	192 B2.000	04/07 →	**CT7DKMR**		Copper	0.8	04
1.4 LPG	66	192 B2.000	11/09 →	**CT7DKMR**		Copper	0.8	04
SCUDO (220_)								
2.0	100	RFN (EW10J4)	05/00 → 12/06	**CT5KHMR11**		Copper	1.1	04
2.0 16V	100	RFN (EW10J4)	06/00 → 12/06	**CT5KHMR11**		Copper	1.1	04
SEICENTO / 600 (187_)								
0.9 (187AXA, 187AXA1A)	29	1170 A1.046	01/98 → 01/10	**CW7LPR**		Nickel	0.8	04
	29	1170 A1.046	01/98 → 01/10	**CT6FMR**		Copper	0.8	04
1.1 (187AXB, 187AXB1A)	40	187 A1.000	01/98 → 01/10	**CT5KMMR**	10/00 → 10/04	Copper	0.8	04
	40	176 B2.000	01/98 → 01/10	**CT7DKMR**	10/00 → 10/04	Copper	0.8	04
SIENA (172_)								
1.4	57	178 F3.011	11/07 →	**CT5KMMR**		Copper	0.8	04
SIENA (178_)								
1.2	44	178 C4.066	09/01 →	**CT5KMMR**		Copper	0.8	04
	44	188 A4.000	09/01 →	**CT5KMMR**		Copper	0.8	04
	54	178 B5.000	09/98 →	**CT5KMMR**		Copper	0.8	04
	59	188 A5.000	09/01 →	**CT8DKMR**		Copper	0.8	04
1.2 ELX Fire 16V	59	188 A5.000	09/01 →	**CT8DKMR**		Copper	0.8	04
1.4	57	350 A1.000	01/07 →	**CT5KMMR**		Copper	0.8	04
	57	178 F3.011	01/07 →	**CT5KMMR**		Copper	0.8	04
1.4 ELX RST II Flex	60	178 F3.011	06/04 → 10/07	**CT5KMMR**		Copper	0.8	04
1.4 Flex	60	178 F3.011	06/04 → 10/07	**CT5KMMR**		Copper	0.8	04
1.6	76	182 B6.000	11/00 →	**CT5KMMR**		Copper	0.8	04
1.6 16V	78	178 B3.000	09/98 →	**CT5KMMR11**		Copper	1.1	04
STILO (192_)								
1.2 16V (192_XA1B)	59	188 A5.000	02/02 → 11/06	**CT8DKMR**		Copper	0.8	04
1.4 16V	66	192 B2.000	03/05 → 11/06	**CT7DKMR**		Copper	0.8	04
	70	843 A1.000	01/04 → 11/06	**CT7DKMR**		Copper	0.8	04
1.6 16V (192_XB1A)	76	182 B6.000	10/01 → 11/06	**CT5KMMR**		Copper	0.8	04
1.8 16V (192_XC1A)	98	192 A4.000	10/01 → 11/06	**7LPR**		Nickel	0.8	04
	98	192 A4.000	10/01 → 11/06	**CT6KMR**		Copper	0.8	04
STRADA Pick-up (178_)								
1.2	44	188 A4.000	04/03 →	**CT5KMMR**		Copper	0.8	04

	kW					CORE		QTY
FIAT								
TALENTO (290_)								
2.0 (290U4)	55	170 B	03/89 → 03/94	**CT6FM**		Copper	0.8	04
2.0 (290UA4)	55	170 B	03/89 → 03/94	**CT6FM**		Copper	0.8	04
2.0 (290UEH4)	55	170 B	03/89 → 03/94	**CW7LP**		Nickel	0.8	04
	55	170 B	03/89 → 03/94	**CT6FM**		Copper	0.8	04
TEMPRA (159_)								
1.4 i.e. (159.AC)	57	159 A2.000	03/91 → 08/96	**CW7LPR**	→ 12/93	Nickel	0.8	04
	57	159 A2.000	03/91 → 08/96	**CT6FMR**	→ 12/93	Copper	0.8	04
1.4 i.e. (159.AC, 159.AX)	51	160 A1.046	03/92 → 08/96	**CW7LPR**		Nickel	0.8	04
	51	159 A2.000	03/92 → 08/96	**CW7LPR**		Nickel	0.8	04
	51	836 A4.000	03/92 → 08/96	**CW7LPR**		Nickel	0.8	04
	51	160 A1.046	03/92 → 08/96	**CT6FMR**		Copper	0.8	04
	51	159 A2.000	03/92 → 08/96	**CT6FMR**		Copper	0.8	04
	51	836 A4.000	03/92 → 08/96	**CT6FMR**		Copper	0.8	04
1.6 (159.AD)	63	159 B9.000	03/90 → 04/93	**CW7LPR**	→ 12/91	Nickel	0.8	04
	63	159 A3.000	03/90 → 04/93	**CT6FMR**	→ 12/91	Copper	0.8	04
1.6 i.e. (159.AE)	57	159 A3.046	06/90 → 07/92	**CW7LPR**		Nickel	0.8	04
	57	159 A3.046	06/90 → 07/92	**CT6FMR**		Copper	0.8	04
1.8 i.e. (159.AZ)	66	835 C4.000	09/93 → 08/96	**CW7LPR**		Nickel	0.8	04
	66	835 C4.000	09/93 → 08/96	**CT6FMR**		Copper	0.8	04
1.8 i.e. (159.BY)	74	836 A5.000	10/94 → 08/96	**CW7LPR**		Nickel	0.8	04
	74	836 A5.000	10/94 → 08/96	**CT6FMR**		Copper	0.8	04
TIPO (160_)								
1.1 (160.AA)	41	160 A3.000	01/88 → 10/91	**CT6KMMR**		Copper	0.8	04
1.4 (160.AC)	52	160 A1.000	07/87 → 12/89	**CW7LPR**		Nickel	0.8	04
	52	160 A1.048	07/87 → 12/89	**CT6FMR**		Copper	0.8	04
1.4 i.e. (160.AP, 160.AD, 160.EA)	51	836 A4.000	05/89 → 04/95	**CW7LPR**		Nickel	0.8	04
	51	160 A1.046	05/89 → 04/95	**CT6FMR**		Copper	0.8	04
1.8 i.e.	66	835 C4.000	09/93 → 04/95	**CW7LPR**		Nickel	0.8	04
	66	835 C4.000	09/93 → 04/95	**CT6FMR**		Copper	0.8	04
	81	159 A4.000	10/90 → 06/93	**CW7LP**		Nickel	0.8	04
	81	159 A4.000	10/90 → 06/93	**CT6FM**		Copper	0.8	04
1.8 i.e. (160.EQ, 160.AM)	74	159 A4.000	10/94 → 10/95	**CW7LP**		Nickel	0.8	04
	74	836 A5.000	10/94 → 10/95	**CT6FM**		Copper	0.8	04
1.8 i.e.16V Sport	100	160 A5.000	11/89 → 06/92	**CJT6FMR**		Copper	0.8	04
TIPO (356_)								
1.4	70	843 A1.000	10/15 →	**CT7DKMR**		Copper	0.8	04
ULYSSE (179_)								
2.0	100	RFN (EW10J4)	08/02 → 06/11	**CT6KHMR11**	→ 10/05	Copper	1.1	04
ULYSSE (220_)								
1.8 (220.BB5)	73	LFW	05/97 → 08/02	**7LPR**		Nickel	0.8	04
	73	LFW	05/97 → 08/02	**CT6KMR**		Copper	0.8	04
2.0 (220.AC5)	89	RFU (XU10J2C)	06/94 → 08/02	**D6KMR**	→ 08/00	Copper	0.9	04
2.0 16V	97	RFV	05/98 → 09/00	**D6KMR**		Copper	0.9	04
	100	RFN (EW10J4)	09/00 → 08/02	**CT5KHMR11**		Copper	1.1	04

	kW					CORE		QTY
FIAT								
ULYSSE (220_)								
2.0 Turbo (220.AD5)	108	RGX (XU10J2CTE)	06/94 → 08/02	**D6KMR**		Copper	0.9	04
UNO (146_)								
50 1.1	37	156 C.046	01/90 → 12/93	**CT6KMMR**		Copper	0.8	04
50 i.e. 1.1	36	146 C3.000	06/92 → 12/93	**CT6KMMR**		Copper	0.8	04
60 1.1	42	160 A3.000	04/89 → 12/92	**CT6KMMR**		Copper	0.8	04
70 i.e.	53	146 C1.000	09/89 → 12/93	**CW7LPR**		Nickel	0.8	04
	53	146 C1.000	09/89 → 12/93	**CT6FMR**		Copper	0.8	04
70 i.e. 1.4	51	160 A1.046	09/89 → 12/93	**CW7LPR**		Nickel	0.8	04
	51	160 A1.046	09/89 → 12/93	**CT6FMR**		Copper	0.8	04
	53	146 C1.000	09/89 → 12/93	**CW7LPR**		Nickel	0.8	04
	53	146 C1.000	09/89 → 12/93	**CT6FMR**		Copper	0.8	04
70 S 1.4	52	160 A1.048	09/89 → 10/92	**CW7LPR**		Nickel	0.8	04
	52	160 A1.048	09/89 → 10/92	**CT6FMR**		Copper	0.8	04
FORD								
B-MAX								
1.4	66	SPJD	10/12 →	**CT5QHMR**		Copper	1.0	04
1.6 Ti	77	IQJA	10/12 →	**CT5QHMR**		Copper	1.0	04
C-MAX								
1.6	74	SHDB	02/07 → 09/10	**CT5QHMR**	→ 08/10	Copper	1.0	04
	74	SHDA	02/07 → 09/10	**CT5QHMR**	→ 08/10	Copper	1.0	04
	74	SHDC	02/07 → 09/10	**CT5QHMR**	→ 08/10	Copper	1.0	04
	74	HWDB	02/07 → 09/10	**CT5QHMR**	→ 08/10	Copper	1.0	04
	74	HWDA	02/07 → 09/10	**CT5QHMR**	→ 08/10	Copper	1.0	04
	85	HXDA	04/07 → 09/10	**CT5QHMR**		Copper	1.0	04
	85	SIDA	04/07 → 09/10	**CT5QHMR**		Copper	1.0	04
	85	HXDB	04/07 → 09/10	**CT5QHMR**		Copper	1.0	04
C-MAX II								
1.6 Ti	63	XTDA	12/10 →	**CT5QHMR**		Copper	1.0	04
	77	IQDA	12/10 →	**CT5QHMR**		Copper	1.0	04
	77	IQDB	12/10 →	**CT5QHMR**		Copper	1.0	04
COUGAR								
2.0 16V	96	EDBD	08/98 → 12/01	**CT5QHMR**		Copper	1.0	04
	96	EDBC	08/98 → 12/01	**CT5QHMR**		Copper	1.0	04
	96	EDBB	08/98 → 12/01	**CT5QHMR**		Copper	1.0	04
	96	EDBA	08/98 → 12/01	**CT5QHMR**		Copper	1.0	04
ESCORT V								
1.6	66	LUJ	07/90 → 08/92	**CT6KMMR**		Copper	0.8	04
	66	LUK	07/90 → 08/92	**CT6KMMR**		Copper	0.8	04
ESCORT VI								
1.4	55	F4B	01/94 → 01/95	**CT6KMMR**		Copper	0.8	04
	55	FUH	01/94 → 01/95	**CT6KMMR**		Copper	0.8	04
ESCORT VII								
RS 2000	110	N7A	02/95 → 02/98	**CT6KMR11**		Copper	1.1	04

	kW					CORE		QTY
FORD								
FIESTA III								
1.4	54	FUJ	03/89 → 12/95	**CT6KMR**		Copper	0.8	04
	54	FUG	03/89 → 12/95	**7LPR**		Nickel	0.8	04
	54	FUH	07/90 → 12/93	**7LPR**		Nickel	0.8	04
1.6	66	LUH	03/89 → 12/92	**CT6KMMR**		Copper	0.8	04
FIESTA V								
1.25 16V	51	M7JB	03/03 → 06/08	**CT5QHMR**	→ 08/05	Copper	1.0	04
	51	M7JA	03/03 → 06/08	**CT5QHMR**	→ 08/05	Copper	1.0	04
	55	FUJB	05/02 → 06/08	**CT5QHMR**		Copper	1.0	04
	55	FUJA	05/02 → 06/08	**CT5QHMR**		Copper	1.0	04
1.3	44	BAJA	11/01 → 06/08	**CT5QHMR**		Copper	1.0	04
	51	A9JB	11/01 → 06/08	**CT5QHMR**		Copper	1.0	04
	51	A9JA	11/01 → 06/08	**CT5QHMR**		Copper	1.0	04
1.4 16V	59	FXJA	11/01 → 06/08	**CT5QHMR**		Copper	1.0	04
	59	FXJB	11/01 → 06/08	**CT5QHMR**		Copper	1.0	04
1.6 16V	74	FYJB	11/01 → 06/08	**CT5QHMR**		Copper	1.0	04
	74	FYJA	11/01 → 06/08	**CT5QHMR**		Copper	1.0	04
FIESTA VI								
1.25	44	STJB	10/12 →	**CT5QHMR**		Copper	1.0	04
	44	STJB	06/08 →	**CT5QHMR**		Copper	1.0	04
	44	STJA	06/08 →	**CT5QHMR**		Copper	1.0	04
	60	SNJA	06/08 →	**CT5QHMR**		Copper	1.0	04
	60	SNJB	06/08 →	**CT5QHMR**		Copper	1.0	04
	60	SNJC	06/08 →	**CT5QHMR**		Copper	1.0	04
	60	SNJD	06/08 →	**CT5QHMR**		Copper	1.0	04
1.6 Ti	77	IQJA	09/12 →	**CT5QHMR**		Copper	1.0	04
FOCUS								
1.4 16V	55	FXDA	10/98 → 04/11	**CT5QHMR**		Copper	1.0	04
	55	FXDB	10/98 → 04/11	**CT5QHMR**		Copper	1.0	04
	55	FXDC	10/98 → 04/11	**CT5QHMR**		Copper	1.0	04
	55	FXDD	10/98 → 04/11	**CT5QHMR**		Copper	1.0	04
1.6 16V	74	FYDB	10/98 → 04/11	**CT5QHMR**		Copper	1.0	04
	74	FYDC	10/98 → 04/11	**CT5QHMR**		Copper	1.0	04
	74	FYDA	10/98 → 04/11	**CT5QHMR**		Copper	1.0	04
	74	FYDH	10/98 → 04/11	**CT5QHMR**		Copper	1.0	04
	74	FYDD	10/98 → 04/11	**CT5QHMR**		Copper	1.0	04
1.6 16V Flexifuel	75	FYDH	01/02 → 11/04	**CT5QHMR**		Copper	1.0	04
1.6 GL 16V Flexifuel	75	FYDH	01/02 → 11/04	**CT5QHMR**		Copper	1.0	04

	kW					CORE		QTY
FORD								
FOCUS								
1.8 16V	85	EYDJ	10/98 → 04/11	**CT5QHMR**	11/01 →	Copper	1.0	04
	85	EYDB	10/98 → 04/11	**CT5QHMR**	11/01 →	Copper	1.0	04
	85	EYDC	10/98 → 04/11	**CT5QHMR**	11/01 →	Copper	1.0	04
	85	EYDD	10/98 → 04/11	**CT5QHMR**	11/01 →	Copper	1.0	04
	85	EYDE	10/98 → 04/11	**CT5QHMR**	11/01 →	Copper	1.0	04
	85	EYDL	10/98 → 04/11	**CT5QHMR**	11/01 →	Copper	1.0	04
	85	EYDF	10/98 → 04/11	**CT5QHMR**	11/01 →	Copper	1.0	04
	85	EYDG	10/98 → 04/11	**CT5QHMR**	11/01 →	Copper	1.0	04
	85	EYDI	10/98 → 04/11	**CT5QHMR**	11/01 →	Copper	1.0	04
1.8 GL 16V	85	EYDJ	10/98 → 04/11	**CT5QHMR**	11/01 →	Copper	1.0	04
	85	EYDB	10/98 → 04/11	**CT5QHMR**	11/01 →	Copper	1.0	04
	85	EYDL	10/98 → 04/11	**CT5QHMR**	11/01 →	Copper	1.0	04
	85	EYDC	10/98 → 04/11	**CT5QHMR**	11/01 →	Copper	1.0	04
	85	EYDD	10/98 → 04/11	**CT5QHMR**	11/01 →	Copper	1.0	04
	85	EYDE	10/98 → 04/11	**CT5QHMR**	11/01 →	Copper	1.0	04
	85	EYDI	10/98 → 04/11	**CT5QHMR**	11/01 →	Copper	1.0	04
	85	EYDF	10/98 → 04/11	**CT5QHMR**	11/01 →	Copper	1.0	04
	85	EYDG	10/98 → 04/11	**CT5QHMR**	11/01 →	Copper	1.0	04
2.0 16V	96	EDDD	10/98 → 04/11	**CT5QHMR**		Copper	1.0	04
	96	EDDF	10/98 → 04/11	**CT5QHMR**		Copper	1.0	04
	96	EDDC	10/98 → 04/11	**CT5QHMR**		Copper	1.0	04
	96	EDDB	10/98 → 04/11	**CT5QHMR**		Copper	1.0	04
FOCUS C-MAX								
1.6	74	HWDB	10/03 → 03/07	**CT5QHMR**		Copper	1.0	04
	74	HWDA	10/03 → 03/07	**CT5QHMR**		Copper	1.0	04
1.6 Ti	85	SIDA	08/04 → 03/07	**CT5QHMR**		Copper	1.0	04
	85	HXDA	08/04 → 03/07	**CT5QHMR**		Copper	1.0	04
FOCUS II								
1.4	59	ASDA	11/04 → 09/12	**CT5QHMR**	→ 04/10	Copper	1.0	04
	59	ASDB	11/04 → 09/12	**CT5QHMR**	→ 04/10	Copper	1.0	04
1.6	74	HWDA	11/04 → 09/12	**CT5QHMR**	→ 09/11	Copper	1.0	04
	74	SHDC	11/04 → 09/12	**CT5QHMR**	→ 09/11	Copper	1.0	04
	74	SHDB	11/04 → 09/12	**CT5QHMR**	→ 09/11	Copper	1.0	04
	74	SHDA	11/04 → 09/12	**CT5QHMR**	→ 09/11	Copper	1.0	04
	74	HWDB	11/04 → 09/12	**CT5QHMR**	→ 09/11	Copper	1.0	04
1.6 Ti	85	HXDB	11/04 → 09/12	**CT5QHMR**	→ 04/10	Copper	1.0	04
	85	SIDA	11/04 → 09/12	**CT5QHMR**	→ 04/10	Copper	1.0	04
	85	HXDA	11/04 → 09/12	**CT5QHMR**	→ 04/10	Copper	1.0	04
FOCUS III								
1.6 Ti	63	XTDA	08/11 →	**CT5QHMR**		Copper	1.0	04
	77	IQDB	04/11 →	**CT5QHMR**		Copper	1.0	04

	kW					CORE		QTY
FORD								
FUSION								
1.25	55	FUJB	08/04 → 12/12	**CT5QHMR**		Copper	1.0	04
	55	FUJA	08/04 → 12/12	**CT5QHMR**		Copper	1.0	04
1.4	59	FXJA	08/02 → 12/12	**CT5QHMR**		Copper	1.0	04
	59	FXJC	08/02 → 12/12	**CT5QHMR**		Copper	1.0	04
	59	FXJB	08/02 → 12/12	**CT5QHMR**		Copper	1.0	04
1.6	74	FYJC	08/02 → 11/08	**CT5QHMR**		Copper	1.0	04
	74	FYJB	08/02 → 11/08	**CT5QHMR**		Copper	1.0	04
	74	FYJA	08/02 → 11/08	**CT5QHMR**		Copper	1.0	04
GALAXY								
2.8 i V6	128	AMY	11/95 → 04/00	**D6KMR**		Copper	0.9	06
2.8 i V6 4x4	128	AAA	04/96 → 04/00	**D6KMR**		Copper	0.9	06
GRANADA I								
2.0	80	N8A	11/88 → 10/92	**CT6KMMR**		Copper	0.8	04
2.0 i	85	N9F	09/91 → 09/94	**CT6KMMR**		Copper	0.8	04
	88	N9D	05/89 → 09/94	**CT6KMMR**		Copper	0.8	04
GRANADA III								
2.0	80	N8A	11/88 → 10/92	**CT6KMMR**		Copper	0.8	04
2.0 i	85	N9F	09/91 → 09/94	**CT6KMMR**		Copper	0.8	04
	88	N9D	09/91 → 09/94	**CT6KMMR**		Copper	0.8	04
	92	N9B	05/89 → 02/92	**CT6KMR**		Copper	0.8	04
GRAND C-MAX								
1.6 Ti	77	IQDA	12/10 →	**CT5QHMR**		Copper	1.0	04
	77	IQDB	12/10 →	**CT5QHMR**		Copper	1.0	04
IKON V								
1.25 16V	51	M7JB	03/03 → 06/08	**CT5QHMR**	→ 08/05	Copper	1.0	04
	51	M7JA	03/03 → 06/08	**CT5QHMR**	→ 08/05	Copper	1.0	04
	55	FUJB	05/02 → 06/08	**CT5QHMR**		Copper	1.0	04
	55	FUJA	05/02 → 06/08	**CT5QHMR**		Copper	1.0	04
1.3	44	BAJA	11/01 → 06/08	**CT5QHMR**		Copper	1.0	04
	51	A9JB	11/01 → 06/08	**CT5QHMR**		Copper	1.0	04
	51	A9JA	11/01 → 06/08	**CT5QHMR**		Copper	1.0	04
1.4 16V	59	FXJA	11/01 → 06/08	**CT5QHMR**		Copper	1.0	04
	59	FXJB	11/01 → 06/08	**CT5QHMR**		Copper	1.0	04
1.6 16V	74	FYJA	11/01 → 06/08	**CT5QHMR**		Copper	1.0	04
	74	FYJB	11/01 → 06/08	**CT5QHMR**		Copper	1.0	04
KA								
1.2	51	FP4	10/08 →	**CT7DKMR**		Copper	0.8	04

	kW					CORE		QTY
FORD								
KA								
1.3 i	44	J4M	09/96 → 11/08	**CT5QHMR**		Copper	1.0	04
	44	J4K	09/96 → 11/08	**CT5QHMR**		Copper	1.0	04
	44	J4D	09/96 → 11/08	**CT5QHMR**		Copper	1.0	04
	44	J4N	09/96 → 11/08	**CT5QHMR**		Copper	1.0	04
	44	J4P	09/96 → 11/08	**CT5QHMR**		Copper	1.0	04
	44	BAA	09/96 → 11/08	**CT5QHMR**		Copper	1.0	04
	44	J4S	09/96 → 11/08	**CT5QHMR**		Copper	1.0	04
	51	A9B	08/02 → 11/08	**CT5QHMR**		Copper	1.0	04
	51	A9A	08/02 → 11/08	**CT5QHMR**		Copper	1.0	04
1.3 i CLX	44	BAA	09/96 → 11/08	**CT5QHMR**		Copper	1.0	04
	44	J4N	09/96 → 11/08	**CT5QHMR**		Copper	1.0	04
	44	J4M	09/96 → 11/08	**CT5QHMR**		Copper	1.0	04
	44	J4K	09/96 → 11/08	**CT5QHMR**		Copper	1.0	04
	44	J4P	09/96 → 11/08	**CT5QHMR**		Copper	1.0	04
	44	J4S	09/96 → 11/08	**CT5QHMR**		Copper	1.0	04
	44	J4D	09/96 → 11/08	**CT5QHMR**		Copper	1.0	04
KA Van								
1.3 i	44	J4D	05/02 → 05/05	**CT5QHMR**		Copper	1.0	04
	44	J4S	05/02 → 05/05	**CT5QHMR**		Copper	1.0	04
	44	J4N	05/02 → 05/05	**CT5QHMR**		Copper	1.0	04
	44	J4K	05/02 → 05/05	**CT5QHMR**		Copper	1.0	04
	44	BAA	05/02 → 05/05	**CT5QHMR**		Copper	1.0	04
	44	J4P	05/02 → 05/05	**CT5QHMR**		Copper	1.0	04
	44	J4M	05/02 → 05/05	**CT5QHMR**		Copper	1.0	04
ORION III								
1.4	54	FUH	07/90 → 12/93	**CT6KMR**		Copper	0.8	04
1.6	66	LUK	07/90 → 12/92	**CT6KMMR**		Copper	0.8	04
	66	LUJ	07/90 → 12/92	**CT6KMMR**		Copper	0.8	04
P 100 II								
2.0	57	NAE	10/87 → 12/92	**CT5QHMR**		Copper	1.0	04
PUMA								
1.4 16V	66	FHF	11/97 → 10/00	**CT5QHMR**		Copper	1.0	04
	66	FHD	11/97 → 10/00	**CT5QHMR**		Copper	1.0	04
1.6 16V	76	L1W	08/00 → 06/02	**CT5QHMR**	→ 12/01	Copper	1.0	04
SCORPIO I								
2.0	80	N8A	11/88 → 10/92	**CT6KMMR**		Copper	0.8	04
2.0 i	85	N9F	09/91 → 09/94	**CT6KMMR**		Copper	0.8	04
	88	N9D	05/89 → 09/94	**CT6KMMR**		Copper	0.8	04
	92	N9B	05/89 → 02/92	**7LPR**		Nickel	0.8	04
	92	N9B	05/89 → 02/92	**CT6KMR**		Copper	0.8	04

	kW					CORE		QTY
FORD								
SIERRA								
2.0	77	N8C	01/87 → 02/93	**CT6KMMR**		Copper	0.8	04
	77	NES	01/87 → 02/93	**CT6KMMR**		Copper	0.8	04
	80	N8A	07/89 → 12/92	**CT6KMMR**		Copper	0.8	04
2.0 4x4	88	N9C	01/90 → 02/93	**CT6KMMR**		Copper	0.8	04
	92	N9C	01/90 → 02/93	**CT6KMMR**		Copper	0.8	04
2.0 i	88	N9C	01/90 → 02/93	**CT6KMMR**		Copper	0.8	04
	90	N9A	01/90 → 02/93	**CT6KMMR**		Copper	0.8	04
	92	N9C	01/90 → 02/93	**CT6KMMR**		Copper	0.8	04
	92	N9B	06/89 → 02/93	**CT6KMMR**		Copper	0.8	04
2.0 i DOHC	85	N9E	12/91 → 02/93	**CT6KMMR**		Copper	0.8	04
2.9 i XR 4x4	110	B4A	08/88 → 02/93	**CT6KMMR**		Copper	0.8	06
TOURNEO CONNECT								
1.8 16V	85	EYPC	06/02 → 12/13	**CT5QHMR**	→ 06/06	Copper	1.0	04
	85	EYPA	06/02 → 12/13	**CT5QHMR**	→ 06/06	Copper	1.0	04
	85	EYPD	06/02 → 12/13	**CT5QHMR**	→ 06/06	Copper	1.0	04
TRANSIT								
2.0 (EBL, EBS, ECL, EDS, EDL, EGL, ESS, ESL, EUS)	84	NSF	09/95 → 03/00	**7LPR**		Nickel	0.8	04
	84	NSG	09/95 → 03/00	**CT6KMR**		Copper	0.8	04
2.0 CNG	84	NSH	06/94 → 03/00	**7LPR**		Nickel	0.8	04
	84	NSH	06/94 → 03/00	**CT6KMR**		Copper	0.8	04
TRANSIT CONNECT								
1.8 16V	85	EYPA	06/02 → 12/13	**CT5QHMR**	→ 06/06	Copper	1.0	04
	85	EYPD	06/02 → 12/13	**CT5QHMR**	→ 06/06	Copper	1.0	04
	85	EYPC	06/02 → 12/13	**CT5QHMR**	→ 06/06	Copper	1.0	04
TRANSIT TOURNEO								
2.0	84	NSH	11/94 → 12/00	**7LPR**		Nickel	0.8	04
	84	NSH	11/94 → 12/00	**CT6KMR**		Copper	0.8	04
GREAT WALL								
HAVAL 5								
2.4	93	4G69S4N	01/13 →	**CT6KMR11**		Copper	1.1	04
	100	4G69S4N	06/10 →	**CT6KMR11**		Copper	1.1	04
2.4 4WD	93	4G69S4N	01/13 →	**CT6KMR11**		Copper	1.1	04
2.4 Trazione integrale	100	4G69S4N	06/10 →	**CT6KMR11**		Copper	1.1	04
X240 (CC6461)	100	4G69S4N	06/10 →	**CT6KMR11**		Copper	1.1	04
HOVER H5								
2.4	93	4G69S4N	01/13 →	**CT6KMR11**		Copper	1.1	04
	100	4G69S4N	06/10 →	**CT6KMR11**		Copper	1.1	04
2.4 4WD	93	4G69S4N	01/13 →	**CT6KMR11**		Copper	1.1	04
2.4 Trazione integrale	100	4G69S4N	06/10 →	**CT6KMR11**		Copper	1.1	04

	kW					CORE		QTY
GREAT WALL								
HOVER H5								
X240 (CC6461)	100	4G69S4N	06/10 →	**CT6KMR11**		Copper	1.1	04
X-SERIES								
2.4	93	4G69S4N	01/13 →	**CT6KMR11**		Copper	1.1	04
	100	4G69S4N	06/10 →	**CT6KMR11**		Copper	1.1	04
2.4 4WD	93	4G69S4N	01/13 →	**CT6KMR11**		Copper	1.1	04
2.4 Trazione integrale	100	4G69S4N	06/10 →	**CT6KMR11**		Copper	1.1	04
X240 (CC6461)	100	4G69S4N	06/10 →	**CT6KMR11**		Copper	1.1	04
HONDA								
ACCORD VI								
1.6 i (CG7)	85	D16B6	10/98 → 12/02	**A5KMR**		Copper	1.1	04
3.0 V6 24V (CG2)	147	J30A1	02/98 → 06/03	**A5KMR**		Copper	1.1	06
3.0 Vtec (CK1)	147	J30A1	03/97 → 12/03	**A5KMR**		Copper	1.1	06
ACCORD VII								
1.6 i (CG7)	85	D16B6	10/98 → 12/02	**A5KMR**		Copper	1.1	04
3.0 V6 24V (CG2)	147	J30A1	02/98 → 06/03	**A5KMR**		Copper	1.1	06
3.0 Vtec (CK1)	147	J30A1	03/97 → 12/03	**A5KMR**		Copper	1.1	06
BALLADE I								
1300 S	52	EN4	10/97 → 12/84	**CT6FMR**		Copper	0.8	04
BALLADE IV								
1.3 16V Cat (EC8)	55	D13B2	09/89 → 09/91	**CT6KMR11**		Copper	1.1	04
1.5 i 16V	66	D15B2	10/88 → 09/91	**CT6KMR11**		Copper	1.1	04
1.5 i 16V (ED6)	69	D15B2	10/88 → 09/91	**CT6KMR11**		Copper	1.1	04
BALLADE V								
1.3	55	D13B2	01/92 → 12/92	**CT6KMR11**		Copper	1.1	04
1.5 i 16V (EG8)	69	D15B2	10/91 → 11/95	**A5KMR**		Copper	1.1	04
	69	D15Z1	10/91 → 11/95	**A5KMR**		Copper	1.1	04
1.6 4x4	92	D16Z7	01/92 → 10/95	**CT6KMR11**		Copper	1.1	04
BALLADE VI								
1.5 i (EK3)	84	D15Z6	11/95 → 02/01	**A5KMR**		Copper	1.1	04
1.6 i Vtec	92	D16Y6	11/95 → 02/01	**A5KMR**		Copper	1.1	04
	92	D16Y8	11/95 → 02/01	**A5KMR**		Copper	1.1	04
CAPA								
1.5 16V	72	D15B	04/98 → 09/02	**A5KMR**		Copper	1.1	04
1.5 4x4	72	D15B	01/98 → 09/02	**A5KMR**		Copper	1.1	04
CITY								
1.3	60	L13A3	10/05 →	**CT6KMR11**		Copper	1.1	04
1.3 (GD6)	63	L13A1	05/03 →	**CT6KMR11**		Copper	1.1	04
1.3 4WD	63	L13A1	11/02 → 10/04	**CT6KMR11**		Copper	1.1	04
1.3 SES	63	L13A1	05/03 → 09/05	**CT6KMR11**		Copper	1.1	04

	kW					CORE		QTY
HONDA								
CIVIC III								
1.3 16V Cat (EC8)	55	D13B2	09/89 → 09/91	**CT6KMR11**		Copper	1.1	04
1.5 i 16V	66	D15B2	10/88 → 09/91	**CT6KMR11**		Copper	1.1	04
1.5 i 16V (ED6)	69	D15B2	10/88 → 09/91	**CT6KMR11**		Copper	1.1	04
CIVIC IV								
1.3	55	D13B2	01/92 → 12/92	**CT6KMR11**		Copper	1.1	04
1.3 16V (EG3)	55	D13B2	10/91 → 11/95	**CT6KMR11**		Copper	1.1	04
1.4 i (MA8, MB2)	55	D14A7	09/95 → 02/01	**CT6KMR11**	→ 06/96	Copper	1.1	04
	55	D14A5	09/95 → 02/01	**CT6KMR11**	→ 06/96	Copper	1.1	04
	55	D14Z3	09/95 → 02/01	**CT6KMR11**	→ 06/96	Copper	1.1	04
	66	D14A8	09/94 → 02/01	**CT6KMR11**		Copper	1.1	04
	66	D14Z4	09/94 → 02/01	**CT6KMR11**		Copper	1.1	04
	66	D14A2	09/94 → 02/01	**CT6KMR11**		Copper	1.1	04
	66	D14A6	09/94 → 02/01	**CT6KMR11**		Copper	1.1	04
1.5 16V (MB3)	84	D15Z8	01/97 → 02/01	**A5KMR**		Copper	1.1	04
1.5 i 16V	66	D15B2	10/88 → 09/91	**CT6KMR11**		Copper	1.1	04
1.5 i 16V (ED6)	69	D15B2	10/88 → 09/91	**CT6KMR11**		Copper	1.1	04
1.5 i 16V (EG4)	69	D15B2	10/91 → 11/95	**A5KMR**		Copper	1.1	04
	69	D15Z1	10/91 → 11/95	**A5KMR**		Copper	1.1	04
1.5 i Vtec-E (MA9)	66	D15Z3	09/94 → 01/97	**A5KMR**		Copper	1.1	04
1.6 4x4	92	D16Z7	01/92 → 10/95	**CT6KMR11**		Copper	1.1	04
1.6 i Vtec (EJ1)	92	D16Z9	01/94 → 03/96	**CT6KMR11**		Copper	1.1	04
	92	D16Y6	01/94 → 03/96	**CT6KMR11**		Copper	1.1	04
CIVIC V								
1.3	55	D13B2	01/92 → 12/92	**CT6KMR11**		Copper	1.1	04
1.3 16V (EG3)	55	D13B2	10/91 → 11/95	**CT6KMR11**		Copper	1.1	04
1.4 16V (MB8)	55	D14A7	04/98 → 02/01	**A5KMR**		Copper	1.1	04
1.4 i (EJ9)	55	D14Z1	11/95 → 02/01	**CT6KMR11**		Copper	1.1	04
	55	D14A3	11/95 → 02/01	**CT6KMR11**		Copper	1.1	04
1.5 16V (MB9)	84	D15Z8	04/98 → 02/01	**A5KMR**		Copper	1.1	04
1.5 i (EK3)	84	D15Z6	11/95 → 02/01	**A5KMR**		Copper	1.1	04
1.5 i 16V (EG4)	69	D15B2	10/91 → 11/95	**A5KMR**		Copper	1.1	04
	69	D15Z1	10/91 → 11/95	**A5KMR**		Copper	1.1	04
1.6 4x4	92	D16Z7	01/92 → 10/95	**CT6KMR11**		Copper	1.1	04
1.6 i (EK1)	84	D16Y5	11/95 → 02/01	**A5KMR**		Copper	1.1	04
1.6 i Vtec	92	D16Y8	11/95 → 02/01	**A5KMR**		Copper	1.1	04
	92	D16Y6	11/95 → 02/01	**A5KMR**		Copper	1.1	04
1.6 i Vtec (EJ1)	92	D16Y6	01/94 → 03/96	**CT6KMR11**		Copper	1.1	04
	92	D16Z9	01/94 → 03/96	**CT6KMR11**		Copper	1.1	04
CIVIC VI								
1.4 16V (MB8)	55	D14A7	04/98 → 02/01	**A5KMR**		Copper	1.1	04
1.4 i (EJ9)	55	D14A3	11/95 → 02/01	**CT6KMR11**		Copper	1.1	04
	55	D14Z1	11/95 → 02/01	**CT6KMR11**		Copper	1.1	04

	kW					CORE		QTY
HONDA								
CIVIC VI								
1.4 i (MA8, MB2)	55	D14A5	09/95 → 02/01	**CT6KMR11**	→ 06/96	Copper	1.1	04
	66	D14A6	09/94 → 02/01	**CT6KMR11**		Copper	1.1	04
	66	D14A2	09/94 → 02/01	**CT6KMR11**		Copper	1.1	04
	66	D14Z4	09/94 → 02/01	**CT6KMR11**		Copper	1.1	04
	55	D14Z3	09/95 → 02/01	**CT6KMR11**	→ 06/96	Copper	1.1	04
	55	D14A7	09/95 → 02/01	**CT6KMR11**	→ 06/96	Copper	1.1	04
	66	D14A8	09/94 → 02/01	**CT6KMR11**		Copper	1.1	04
1.5 16V (MB9)	84	D15Z8	04/98 → 02/01	**A5KMR**		Copper	1.1	04
1.5 i (EK3)	84	D15Z6	11/95 → 02/01	**A5KMR**		Copper	1.1	04
1.5 i Vtec-E (MA9)	66	D15Z3	09/94 → 01/97	**A5KMR**		Copper	1.1	04
1.6 i	77	D16Y7	03/96 → 03/00	**A5KMR**		Copper	1.1	04
1.6 i (EK1)	84	D16Y5	11/95 → 02/01	**A5KMR**		Copper	1.1	04
1.6 i Vtec	92	D16Y8	03/96 → 03/00	**A5KMR**		Copper	1.1	04
	92	D16Y6	11/95 → 02/01	**A5KMR**		Copper	1.1	04
CIVIC VII								
1.4 (ES4)	66	D14Z5	12/00 → 09/05	**A5KMR**		Copper	1.1	04
1.4 i	55	D14Z6	02/01 → 09/05	**A5KMR**		Copper	1.1	04
1.4 iS (EP1)	66	D14Z5	02/01 → 09/05	**A5KMR**		Copper	1.1	04
	66	D14Z6	02/01 → 09/05	**A5KMR**		Copper	1.1	04
1.6	81	D16V1	02/01 → 09/05	**A5KMR**		Copper	1.1	04
1.6 i	81	D16V1	02/01 → 12/05	**A5KMR**		Copper	1.1	04
CR-V I								
2.0 (RD1)	98	B20Z1	04/99 → 02/02	**A5KMR**		Copper	1.1	04
2.0 16V 4WD (RD1, RD3)	94	B20B	10/95 → 01/99	**A5KMR**		Copper	1.1	04
	108	B20Z1	01/99 → 02/02	**A5KMR**		Copper	1.1	04
2.0 ELX 16V (RD1, RD3)	108	B20Z1	01/99 → 02/02	**A5KMR**		Copper	1.1	04
HR-V								
1.6 16V (GH1, GH3)	77	D16W1	03/99 →	**A5KMR**	→ 09/05	Copper	1.1	04
1.6 16V 4WD (GH2, GH4)	77	D16W1	03/99 →	**A5KMR**	→ 09/05	Copper	1.1	04
	91	D16W5	10/99 →	**A5KMR**	→ 09/05	Copper	1.1	04
JAZZ								
1.3 (GD6)	63	L13A1	05/03 →	**CT6KMR11**		Copper	1.1	04
JAZZ II								
1.2 (GD5)	57	L12A1	03/02 → 07/08	**CT6KMR11**		Copper	1.1	04
1.3 (GD1)	61	L13A1	03/02 → 07/08	**CT6KMR11**		Copper	1.1	04
1.3 iDSi	63	L13A1	03/02 → 09/07	**CT6KMR11**		Copper	1.1	04
LOGO								
1.3 (GA3)	48	D13B7	03/99 → 03/02	**A5KMR**		Copper	1.1	04
ODYSSEY								
2.3	110	F23A	07/02 → 09/03	**A5KMR**		Copper	1.1	04
2.3 4x4	110	F23A	07/02 → 09/03	**A5KMR**		Copper	1.1	04

	kW					CORE		QTY
HYUNDAI								
ACCENT I								
1.3	44	G4EH	10/94 → 01/00	**CT5KMMR11**		Copper	1.1	04
	55	G4EH	10/94 → 01/00	**CT5KMMR11**		Copper	1.1	04
1.3 i 12V	62	G4EH	10/94 → 01/00	**CT5KMMR11**		Copper	1.1	04
1.5	63	G4EK	10/94 →	**CT5KMMR11**		Copper	1.1	04
1.5 16V	76	G4FK	10/94 →	**CT5KMMR11**		Copper	1.1	04
1.5 i 12V	63	G4EK	10/94 →	**CT5KMMR11**		Copper	1.1	04
	65	G4EK	10/94 → 01/00	**CT5KMMR11**		Copper	1.1	04
1.5 i 16V	73	G4ER	12/95 → 01/00	**CT5KMMR11**		Copper	1.1	04
ACCENT II								
1.3	55	G4EA	01/00 → 11/05	**CT5KMMR11**	→ 01/03	Copper	1.1	04
	62	G4EH	08/02 → 11/05	**CT5KMMR11**		Copper	1.1	04
	61	G4EA	01/00 → 11/05	**CT5KMMR11**	→ 01/03	Copper	1.1	04
	63	G4EA	01/00 → 11/05	**CT5KMMR11**	→ 01/03	Copper	1.1	04
1.5	75	G4FK	09/99 → 10/02	**CT5KMMR11**		Copper	1.1	04
	65	G4EK	09/99 → 10/02	**CT5KMMR11**		Copper	1.1	04
	66	G4EB	01/00 → 11/05	**CT5KMMR11**	→ 01/03	Copper	1.1	04
	75	G4EC-G	09/00 → 11/05	**CT5KMMR11**	→ 01/03	Copper	1.1	04
1.6	77	G4ED-G	12/02 → 11/05	**CT5KMMR11**		Copper	1.1	04
	77	G4ED-G	12/02 → 11/05	**CT6KMR**		Copper	0.8	04
	77	G4ED-G	12/02 → 11/05	**7LPR**		Nickel	0.8	04
ACCENT III								
1.4 GL	71	G4EE	11/05 → 11/10	**CT5KMMR11**		Copper	1.1	04
	71	G4EE	11/05 → 11/10	**CT6KMR**		Copper	0.8	04
	71	G4EE	11/05 → 11/10	**7LPR**		Nickel	0.8	04
1.6 GLS	82	G4ED	11/05 → 11/10	**CT5KMMR11**		Copper	1.1	04
ACCENT IV								
1.4 GL	71	G4EE	11/05 → 11/10	**CT5KMMR11**		Copper	1.1	04
	71	G4EE	11/05 → 11/10	**CT6KMR**		Copper	0.8	04
	71	G4EE	11/05 → 11/10	**7LPR**		Nickel	0.8	04
1.6 GLS	82	G4ED	11/05 → 11/10	**CT5KMMR11**		Copper	1.1	04
ATOS								
1.0 i	40	G4HC	02/98 → 03/02	**CT5KMMR11**		Copper	1.1	04
	41	G4HC	02/98 → 03/02	**CT5KMMR11**		Copper	1.1	04
	43	G4HC-E	03/01 →	**CT5KMMR11**	→ 03/08	Copper	1.1	04
1.0 i GLS	40	G4HC	02/98 → 03/02	**CT5KMMR11**		Copper	1.1	04
	43	G4HC-E	03/01 →	**CT5KMMR11**	→ 03/08	Copper	1.1	04
1.1	43	G4HD	08/03 → 05/05	**CT5KMMR11**		Copper	1.1	04
	45	G4HG	06/03 →	**CT5KMMR11**	→ 03/08	Copper	1.1	04
	46	G4HG	03/04 →	**CT5KMMR11**	→ 03/08	Copper	1.1	04
ATOS PRIME								
1.0 i	40	G4HC	08/99 →	**CT5KMMR11**		Copper	1.1	04
	43	G4HC-E	03/01 →	**CT5KMMR11**		Copper	1.1	04
1.0 i GLS	43	G4HC-E	03/01 →	**CT5KMMR11**		Copper	1.1	04

	kW					CORE		QTY
HYUNDAI								
ATOS PRIME								
1.1	43	G4HD	06/03 →	**CT5KMMR11**		Copper	1.1	04
	46	G4HG	09/05 →	**CT5KMMR11**		Copper	1.1	04
ATOZ								
1.0 i	40	G4HC	02/98 → 03/02	**CT5KMMR11**		Copper	1.1	04
	41	G4HC	02/98 → 03/02	**CT5KMMR11**		Copper	1.1	04
	43	G4HC-E	03/01 →	**CT5KMMR11**	→ 03/08	Copper	1.1	04
1.0 i GLS	40	G4HC	02/98 → 03/02	**CT5KMMR11**		Copper	1.1	04
	43	G4HC-E	03/01 →	**CT5KMMR11**	→ 03/08	Copper	1.1	04
1.1	43	G4HD	08/03 → 05/05	**CT5KMMR11**		Copper	1.1	04
	45	G4HG	06/03 →	**CT5KMMR11**	→ 03/08	Copper	1.1	04
	46	G4HG	03/04 →	**CT5KMMR11**	→ 03/08	Copper	1.1	04
AVANTE								
1.5 16V	75	G4EC-G	09/00 → 07/06	**CT5KMMR11**		Copper	1.1	04
1.6	66	G4GR	06/00 → 07/06	**CT5KMMR11**		Copper	1.1	04
	77	G4ED-G	05/03 → 07/06	**CT5KMMR11**		Copper	1.1	04
	79	G4ED-G	06/00 → 07/06	**CT5KMMR11**		Copper	1.1	04
1.8	97	G4BB	06/00 → 07/06	**CT5KMMR11**		Copper	1.1	04
	97	G4GB	06/00 → 07/06	**CT5KMMR11**		Copper	1.1	04
2.0	102	G4GC-G	06/00 → 07/06	**CT5KMMR11**		Copper	1.1	04
	104	G4GC	06/00 → 07/06	**CT5KMMR11**		Copper	1.1	04
	105	G4GC	10/03 → 07/06	**CT5KMMR11**		Copper	1.1	04
2.0 CVVT	103	G4GC	06/06 → 05/10	**CT5KMMR11**		Copper	1.1	04
	105	G4GC	06/06 → 06/11	**CT5KMMR11**	→ 12/06	Copper	1.1	04
2.0 GLS	105	G4GC	10/03 → 07/06	**CT5KMMR11**		Copper	1.1	04
AVANTE II								
1.5 12V	65	G4EK	12/96 → 09/00	**CT5KMMR11**		Copper	1.1	04
1.5 16V	76	G4FK	11/95 →	**CT5KMMR11**		Copper	1.1	04
1.6 16V	76	G4ED	11/95 →	**CT5KMMR11**		Copper	1.1	04
	84	G4GR	11/95 → 09/00	**CT5KMMR11**		Copper	1.1	04
1.6 i	66	G4GR	11/95 → 09/00	**CT5KMMR11**		Copper	1.1	04
1.8 16V	94	G4GM	11/95 → 09/00	**CT5KMMR11**		Copper	1.1	04
2.0	100	G4JP	04/97 → 05/00	**CT5KMMR11**		Copper	1.1	04
2.0 16V	102	G4GF	08/96 → 09/00	**CT5KMMR11**		Copper	1.1	04
AVEGA III								
1.4 GL	71	G4EE	11/05 → 11/10	**7LPR**		Nickel	0.8	04
	71	G4EE	11/05 → 11/10	**CT5KMMR11**		Copper	1.1	04
	71	G4EE	11/05 → 11/10	**CT6KMR**		Copper	0.8	04
1.6 GLS	82	G4ED	11/05 → 11/10	**CT5KMMR11**		Copper	1.1	04
AZERA								
2.4	121	G4KC	09/06 →	**CT5KHMR11**		Copper	1.1	04
2.4 16V	148	G4KJ	01/11 →	**CT5KHMR11**		Copper	1.1	04

	kW					CORE		QTY
HYUNDAI								
CLICK								
1.1	46	G4HD	09/02 → 09/05	**CT5KMMR11**		Copper	1.1	04
	49	G4HG	09/05 → 06/09	**CT5KMMR11**	11/06 →	Copper	1.1	04
	49	G4HD	09/05 → 06/09	**CT5KMMR11**	11/06 →	Copper	1.1	04
1.3	61	G4EA	09/04 → 06/09	**CT5KMMR11**		Copper	1.1	04
	63	G4EA	09/03 → 09/05	**CT5KMMR11**	→ 03/04	Copper	1.1	04
1.3 i	60	G4EA	09/02 → 03/04	**CT5KMMR11**		Copper	1.1	04
1.4 i	71	G4EE	08/05 →	**CT5KMMR11**	11/06 →	Copper	1.1	04
1.5 i	73	G4EC-G	09/02 → 10/05	**CT5KMMR11**		Copper	1.1	04
	73	G4ER	09/02 → 10/05	**CT5KMMR11**		Copper	1.1	04
1.6	77	G4ED-G	09/02 → 09/05	**CT5KMMR11**		Copper	1.1	04
	78	G4ED-G	08/05 →	**CT5KMMR11**	→ 08/06	Copper	1.1	04
COUPE								
1.6 16V	77	G4ED-G	03/02 → 08/09	**CT5KMMR11**	→ 08/06	Copper	1.1	04
	79	G4ED-G	03/02 → 08/09	**CT5KMMR11**	→ 08/06	Copper	1.1	04
	85	G4GR	03/98 → 04/02	**CT5KMMR11**		Copper	1.1	04
1.6 i 16V	79	G4ED-G	08/00 → 01/02	**CT5KMMR11**		Copper	1.1	04
	84	G4ED	12/96 → 04/02	**CT5KMMR11**		Copper	1.1	04
2.0	100	G4GC-G	08/10 → 08/09	**CT5KMMR11**	→ 12/06	Copper	1.1	04
	102	G4GC-G	03/02 → 08/09	**CT5KMMR11**	09/06 →	Copper	1.1	04
2.0 16V	102	G4GF	08/96 → 04/02	**CT5KMMR11**		Copper	1.1	04
2.0 FX	102	G4GF	08/96 → 04/02	**CT5KMMR11**		Copper	1.1	04
2.0 GLS	105	G4GC-G	02/03 → 08/09	**CT5KMMR11**	→ 12/06	Copper	1.1	04
F2 Evolution	115	G4GF	01/99 → 05/99	**CT5KMMR11**		Copper	1.1	04
ELANTRA								
1.5 16V	75	G4EC-G	09/00 → 07/06	**CT5KMMR11**		Copper	1.1	04
1.6	66	G4GR	06/00 → 07/06	**CT5KMMR11**		Copper	1.1	04
	77	G4ED-G	05/03 → 07/06	**CT5KMMR11**		Copper	1.1	04
	79	G4ED-G	06/00 → 07/06	**CT5KMMR11**		Copper	1.1	04
1.8	97	G4GB	06/00 → 07/06	**CT5KMMR11**		Copper	1.1	04
	97	G4BB	06/00 → 07/06	**CT5KMMR11**		Copper	1.1	04
2.0	102	G4GC-G	06/00 → 07/06	**CT5KMMR11**		Copper	1.1	04
	104	G4GC	06/00 → 07/06	**CT5KMMR11**		Copper	1.1	04
	105	G4GC	10/03 → 07/06	**CT5KMMR11**		Copper	1.1	04
2.0 CVVT	103	G4GC	06/06 → 05/10	**CT5KMMR11**		Copper	1.1	04
	105	G4GC	06/06 → 06/11	**CT5KMMR11**	→ 12/06	Copper	1.1	04
2.0 GLS	105	G4GC	10/03 → 07/06	**CT5KMMR11**		Copper	1.1	04
ELANTRA II								
1.5 12V	65	G4EK	04/97 → 10/00	**CT5KMMR11**		Copper	1.1	04
	65	G4EK	12/96 → 09/00	**CT5KMMR11**		Copper	1.1	04
1.5 16V	76	G4FK	11/95 →	**CT5KMMR11**		Copper	1.1	04
1.6 16V	76	G4ED	11/95 →	**CT5KMMR11**		Copper	1.1	04
	84	G4GR	11/95 → 09/00	**CT5KMMR11**		Copper	1.1	04
1.6 i	66	G4GR	11/95 → 09/00	**CT5KMMR11**		Copper	1.1	04
1.8 16V	94	G4GM	11/95 → 09/00	**CT5KMMR11**		Copper	1.1	04

	kW					CORE		QTY
HYUNDAI								
ELANTRA II								
2.0	100	G4JP	04/97 → 05/00	**CT5KMMR11**		Copper	1.1	04
2.0 16V	102	G4GF	08/96 → 09/00	**CT5KMMR11**		Copper	1.1	04
ELANTRA LAVITA								
1.5	75	G4EC-G	06/01 → 08/10	**CT5KMMR11**		Copper	1.1	04
1.6	66	G4ED-L	01/02 → 12/05	**CT5KMMR11**		Copper	1.1	04
	76	G4ED-G	06/01 → 08/10	**CT5KMMR11**	09/06 →	Copper	1.1	04
1.8	90	G4GB-G	06/01 → 08/10	**CT5KMMR11**	→ 08/06	Copper	1.1	04
EMBERA V								
2.0 GLSI	119	G4KD	07/08 → 12/10	**CT5KHMR11**		Copper	1.1	04
2.0 VVTi GLS	106	G4KA	05/05 →	**CT5KMMR11**	→ 04/08	Copper	1.1	04
	121	G4KD	01/08 →	**CT5KHMR11**		Copper	1.1	04
2.4	119	G4KC	01/05 →	**CT5KMMR11**	→ 12/07	Copper	1.1	04
	125	G4KC	06/08 → 12/09	**CT5KHMR11**		Copper	1.1	04
	127	G4KE	06/08 →	**CT5KHMR11**		Copper	1.1	04
EXCEL								
1.5	63	G4EK	10/94 →	**CT5KMMR11**		Copper	1.1	04
1.5 i 12V	63	G4EK	10/94 →	**CT5KMMR11**		Copper	1.1	04
EXCEL I								
1.3	55	G4EH	10/94 → 01/00	**CT5KMMR11**		Copper	1.1	04
	44	G4EH	10/94 → 01/00	**CT5KMMR11**		Copper	1.1	04
1.3 i 12V	62	G4EH	10/94 → 01/00	**CT5KMMR11**		Copper	1.1	04
1.5 16V	76	G4FK	10/94 →	**CT5KMMR11**		Copper	1.1	04
1.5 i 12V	65	G4EK	10/94 → 01/00	**CT5KMMR11**		Copper	1.1	04
1.5 i 16V	73	G4ER	12/95 → 01/00	**CT5KMMR11**		Copper	1.1	04
	73	G4ER	12/95 → 01/00	**CT6KMR11**		Copper	1.1	04
EXCEL II								
1.3	63	G4EA	01/00 → 11/05	**CT5KMMR11**	→ 01/03	Copper	1.1	04
	61	G4EA	01/00 → 11/05	**CT5KMMR11**	→ 01/03	Copper	1.1	04
	55	G4EA	01/00 → 11/05	**CT5KMMR11**	→ 01/03	Copper	1.1	04
	62	G4EH	08/02 → 11/05	**CT5KMMR11**		Copper	1.1	04
1.5	65	G4EK	09/99 → 10/02	**CT5KMMR11**		Copper	1.1	04
	66	G4EB	01/00 → 11/05	**CT5KMMR11**	→ 01/03	Copper	1.1	04
	75	G4EC-G	09/00 → 11/05	**CT5KMMR11**	→ 01/03	Copper	1.1	04
1.6	77	G4ED-G	12/02 → 11/05	**7LPR**		Nickel	0.8	04
	77	G4ED-G	12/02 → 11/05	**CT6KMR**		Copper	0.8	04
	77	G4ED-G	12/02 → 11/05	**CT5KMMR11**		Copper	1.1	04
GETZ								
1.1	46	G4HD	09/02 → 09/05	**CT5KMMR11**		Copper	1.1	04
	49	G4HG	09/05 → 06/09	**CT5KMMR11**	11/06 →	Copper	1.1	04
	49	G4HD	09/05 → 06/09	**CT5KMMR11**	11/06 →	Copper	1.1	04
1.3	61	G4EA	09/04 → 06/09	**CT5KMMR11**		Copper	1.1	04
	63	G4EA	09/03 → 09/05	**CT5KMMR11**	→ 03/04	Copper	1.1	04
1.3 i	60	G4EA	09/02 → 03/04	**CT5KMMR11**		Copper	1.1	04
1.4 i	71	G4EE	08/05 →	**CT5KMMR11**	11/06 →	Copper	1.1	04

	kW					CORE		QTY
HYUNDAI								
GETZ								
1.5 i	73	G4EC-G	09/02 → 10/05	**CT5KMMR11**		Copper	1.1	04
	73	G4ER	09/02 → 10/05	**CT5KMMR11**		Copper	1.1	04
1.6	77	G4ED-G	09/02 → 09/05	**CT5KMMR11**		Copper	1.1	04
	78	G4ED-G	08/05 →	**CT5KMMR11**	→ 08/06	Copper	1.1	04
GETZ PRIME								
1.1	46	G4HD	09/02 → 09/05	**CT5KMMR11**		Copper	1.1	04
	49	G4HG	09/05 → 06/09	**CT5KMMR11**	11/06 →	Copper	1.1	04
	49	G4HD	09/05 → 06/09	**CT5KMMR11**	11/06 →	Copper	1.1	04
1.3	61	G4EA	09/04 → 06/09	**CT5KMMR11**		Copper	1.1	04
	63	G4EA	09/03 → 09/05	**CT5KMMR11**	→ 03/04	Copper	1.1	04
1.3 i	60	G4EA	09/02 → 03/04	**CT5KMMR11**		Copper	1.1	04
1.4 i	71	G4EE	08/05 →	**CT5KMMR11**	11/06 →	Copper	1.1	04
1.5 i	73	G4EC-G	09/02 → 10/05	**CT5KMMR11**		Copper	1.1	04
	73	G4ER	09/02 → 10/05	**CT5KMMR11**		Copper	1.1	04
1.6	77	G4ED-G	09/02 → 09/05	**CT5KMMR11**		Copper	1.1	04
	78	G4ED-G	08/05 →	**CT5KMMR11**	→ 08/06	Copper	1.1	04
GRACE								
2.4	82	G4CS	10/97 → 12/04	**CT6FMR**	→ 03/00	Copper	0.8	04
	84	G4CS	01/97 → 03/00	**CW7LPR**		Nickel	0.8	04
	84	G4CS	01/97 → 03/00	**CT6FMR**		Copper	0.8	04
	90	G4CS	07/93 → 03/00	**CW7LPR**		Nickel	0.8	04
	90	G4CS	07/93 → 03/00	**CT6FMR**		Copper	0.8	04
GRANDEUR								
2.4	121	G4KC	09/06 →	**CT5KHMR11**		Copper	1.1	04
2.4 16V	148	G4KJ	01/11 →	**CT5KHMR11**		Copper	1.1	04
H-1 / STAREX								
2.4	82	G4CS	06/97 → 04/04	**CW7LPR**		Nickel	0.8	04
2.4 4WD	82	G4CS	02/98 → 04/04	**CT6FMR**	→ 07/01	Copper	0.8	04
H100 / GRACE								
2.4	82	G4CS	10/97 → 12/04	**CT6FMR**	→ 03/00	Copper	0.8	04
	84	G4CS	01/97 → 03/00	**CT6FMR**		Copper	0.8	04
	90	G4CS	07/93 → 03/00	**CT6FMR**		Copper	0.8	04
2.4 TD	90	G4CS	07/93 → 07/97	**CT6FMR**		Copper	0.8	04
H 150								
2.4	82	G4CS	10/97 → 12/04	**CT6FMR**	→ 03/00	Copper	0.8	04
	84	G4CS	01/97 → 03/00	**CW7LPR**		Nickel	0.8	04
	84	G4CS	01/97 → 03/00	**CT6FMR**		Copper	0.8	04
	90	G4CS	07/93 → 03/00	**CT6FMR**		Copper	0.8	04
	90	G4CS	07/93 → 03/00	**CW7LPR**		Nickel	0.8	04
H 200								
2.4	82	G4CS	06/97 → 04/04	**CW7LPR**		Nickel	0.8	04
2.4 4WD	82	G4CS	02/98 → 04/04	**CT6FMR**	→ 07/01	Copper	0.8	04

	kW					CORE		QTY
HYUNDAI								
HIGHWAY VAN								
2.0 16V	100	G4JP	03/00 →	**CT5KMMR11**	→ 02/04	Copper	1.1	04
2.0 CVVT	00	G4GC	11/03 → 03/04	**CT5KMMR11**		Copper	1.1	
2.7 V6 24V	125	G6BA	03/00 →	**CT5KMMR11**	→ 02/04	Copper	1.1	06
i10								
1.1	48	G4HG	12/07 →	**CT5KMMR11**	→ 11/10	Copper	1.1	04
	49	G4HG	01/08 →	**CT5KMMR11**	→ 11/10	Copper	1.1	04
	51	G4HG	04/11 →	**CT5KMMR**	→ 11/13	Copper	0.8	04
ix35								
2.0	120	G4KD	01/10 →	**CT5KHMR11**		Copper	1.1	04
	122	G4KD	01/10 →	**CT5KHMR11**		Copper	1.1	04
2.0 4WD	120	G4KD	01/10 →	**CT5KHMR11**		Copper	1.1	04
2.0 CVVT 4WD	122	G4KD	08/09 →	**CT5KHMR11**		Copper	1.1	04
2.0 GDi	122	G4NC	08/13 →	**CT5KHMR11**		Copper	1.1	04
2.0 GDi 4WD	122	G4NC	08/13 →	**CT5KHMR11**		Copper	1.1	04
2.0 GLS	120	G4KD	01/10 →	**CT5KHMR11**		Copper	1.1	04
2.4 DCVVT-I 4WD	128	G4KE	07/10 → 12/13	**CT5KHMR11**		Copper	1.1	04
i45 VI								
2.0	110	G4KD	01/09 →	**CT5KHMR11**		Copper	1.1	04
2.0 i	121	G4KD	01/11 →	**CT5KHMR11**		Copper	1.1	04
2.4	128	G4KC	01/09 →	**CT5KHMR11**		Copper	1.1	04
	131	G4KC	01/09 →	**CT5KHMR11**		Copper	1.1	04
JM								
2.0	104	G4GC	08/04 → 03/10	**CT5KMMR11**	→ 12/06	Copper	1.1	04
	105	G4GC	01/10 → 03/10	**CT5KMMR11**		Copper	1.1	04
2.0 GLS	105	G4GC	01/10 → 03/10	**CT5KMMR11**		Copper	1.1	04
2.0 Trazione integrale	100	G4GC	07/05 → 11/10	**CT5KMMR11**		Copper	1.1	
	104	G4GC	08/04 → 03/10	**CT5KMMR11**	→ 12/06	Copper	1.1	04
LANTRA II								
1.5 12V	65	G4EK	04/97 → 10/00	**CT6KMR11**		Copper	1.1	04
	65	G4EK	12/96 → 09/00	**CT5KMMR11**		Copper	1.1	04
1.5 16V	76	G4FK	11/95 →	**CT5KMMR11**		Copper	1.1	04
1.6 16V	76	G4ED	11/95 →	**CT5KMMR11**		Copper	1.1	04
	84	G4GR	11/95 → 09/00	**CT5KMMR11**		Copper	1.1	04
1.6 i	66	G4GR	11/95 → 09/00	**CT5KMMR11**		Copper	1.1	04
1.8 16V	94	G4GM	11/95 → 09/00	**CT5KMMR11**		Copper	1.1	04
2.0	100	G4JP	04/97 → 05/00	**CT5KMMR11**		Copper	1.1	04
2.0 16V	102	G4GF	08/96 → 09/00	**CT5KMMR11**		Copper	1.1	04
LAVITA								
1.5	75	G4EC-G	06/01 → 08/10	**CT5KMMR11**		Copper	1.1	04
1.6	66	G4ED-L	01/02 → 12/05	**CT5KMMR11**		Copper	1.1	04
	76	G4ED-G	06/01 → 08/10	**CT5KMMR11**	09/06 →	Copper	1.1	04
1.8	90	G4GB-G	06/01 → 08/10	**CT5KMMR11**	→ 08/06	Copper	1.1	04

	kW					CORE		QTY
HYUNDAI								
LIBERO								
2.4	82	G4CS	06/97 → 04/04	**CW7LPR**		Nickel	0.8	04
2.4 4WD	82	G4CS	02/98 → 04/04	**CT6FMR**	→ 07/01	Copper	0.8	04
MATRIX								
1.5	75	G4EC-G	06/01 → 08/10	**CT5KMMR11**		Copper	1.1	04
1.6	66	G4ED-L	01/02 → 12/05	**CT5KMMR11**		Copper	1.1	04
	76	G4ED-G	06/01 → 08/10	**CT5KMMR11**	09/06 →	Copper	1.1	04
1.8	90	G4GB-G	06/01 → 08/10	**CT5KMMR11**	→ 08/06	Copper	1.1	04
NF V								
2.0 GLSI	119	G4KD	07/08 → 12/10	**CT5KHMR11**		Copper	1.1	04
2.0 VVTi GLS	106	G4KA	05/05 →	**CT5KMMR11**	→ 04/08	Copper	1.1	04
	121	G4KD	01/08 →	**CT5KHMR11**		Copper	1.1	04
2.4	119	G4KC	01/05 →	**CT5KHMR11**	→ 12/07	Copper	1.1	04
	125	G4KC	06/08 → 12/09	**CT5KHMR11**		Copper	1.1	04
	127	G4KE	06/08 →	**CT5KHMR11**		Copper	1.1	04
PONY I								
1.3	44	G4EH	10/94 → 01/00	**CT5KMMR11**		Copper	1.1	04
	55	G4EH	10/94 → 01/00	**CT5KMMR11**		Copper	1.1	04
1.3 i 12V	62	G4EH	10/94 → 01/00	**CT5KMMR11**		Copper	1.1	04
1.5	63	G4EK	10/94 →	**CT5KMMR11**		Copper	1.1	04
1.5 16V	76	G4FK	10/94 →	**CT5KMMR11**		Copper	1.1	04
1.5 i 12V	63	G4EK	10/94 →	**CT5KMMR11**		Copper	1.1	04
	65	G4EK	10/94 → 01/00	**CT5KMMR11**		Copper	1.1	04
1.5 i 16V	73	G4ER	12/95 → 01/00	**CT5KMMR11**		Copper	1.1	04
PORTER								
2.4	82	G4CS	03/96 → 04/04	**CT6FMR**		Copper	0.8	04
	82	G4CS	03/96 → 04/04	**CW7LPR**		Nickel	0.8	04
PRIME								
1.0 i	40	G4HC	02/98 → 03/02	**CT5KMMR11**		Copper	1.1	04
	41	G4HC	02/98 → 03/02	**CT5KMMR11**		Copper	1.1	04
	43	G4HC-E	03/01 →	**CT5KMMR11**	→ 03/08	Copper	1.1	04
1.0 i GLS	40	G4HC	02/98 → 03/02	**CT5KMMR11**		Copper	1.1	04
	43	G4HC-E	03/01 →	**CT5KMMR11**	→ 03/08	Copper	1.1	04
1.1	43	G4HD	08/03 → 05/05	**CT5KMMR11**		Copper	1.1	04
	45	G4HG	06/03 →	**CT5KMMR11**	→ 03/08	Copper	1.1	04
	46	G4HG	03/04 →	**CT5KMMR11**	→ 03/08	Copper	1.1	04
S COUPE								
1.5 i	65	G4EK	04/92 → 05/96	**CT5KMMR11**		Copper	1.1	04
1.5 i Turbo	85	G4EK-TC	04/91 → 05/96	**7LPR**		Nickel	0.8	04
	85	G4EK-TC	04/91 → 05/96	**CT6KMR**		Copper	0.8	04
SANTA FÉ I								
2.7 V6 4x4	127	G6BA-G	02/01 → 03/06	**CT5KMMR11**		Copper	1.1	06

	kW					CORE		QTY
HYUNDAI								
SANTA FÉ II								
2.4	128	G4KE	11/10 →	**CT5KHMR11**		Copper	1.1	04
2.4 4x4	128	G4KE	07/10 →	**CT5KHMR11**		Copper	1.1	04
2.4 GLS	128	G4KE	11/10 →	**CT5KHMR11**		Copper	1.1	04
SANTA FÉ III								
2.4	141	G4KJ	09/12 → 12/15	**CT5KHMR11**		Copper	1.1	04
2.4 4WD	141	G4KJ	09/12 → 12/15	**CT5KHMR11**		Copper	1.1	04
SANTRO								
1.0 i	40	G4HC	02/98 → 03/02	**CT5KMMR11**		Copper	1.1	04
	41	G4HC	02/98 → 03/02	**CT5KMMR11**		Copper	1.1	04
	43	G4HC-E	03/01 →	**CT5KMMR11**	→ 03/08	Copper	1.1	04
1.0 i GLS	40	G4HC	02/98 → 03/02	**CT5KMMR11**		Copper	1.1	04
	43	G4HC-E	03/01 →	**CT5KMMR11**	→ 03/08	Copper	1.1	04
1.1	43	G4HD	08/03 → 05/05	**CT5KMMR11**		Copper	1.1	04
	45	G4HG	06/03 →	**CT5KMMR11**	→ 03/08	Copper	1.1	04
	46	G4HG	03/04 →	**CT5KMMR11**	→ 03/08	Copper	1.1	04
SATELLITE								
2.4	82	G4CS	06/97 → 04/04	**CW7LPR**		Nickel	0.8	04
2.4 4WD	82	G4CS	02/98 → 04/04	**CT6FMR**	→ 07/01	Copper	0.8	04
SONATA								
2.4 i	83	G4CS	09/88 → 08/91	**CW7LPR**		Nickel	0.8	04
SONATA II								
2.4 i	83	G4CS	09/88 → 08/91	**CW7LPR**		Nickel	0.8	04
	83	G4CS	09/88 → 08/91	**CT6FMR**		Copper	0.8	04
SONATA V								
2.0 GLSI	119	G4KD	07/08 → 12/10	**CT5KHMR11**		Copper	1.1	04
2.0 VVTi GLS	106	G4KA	05/05 →	**CT5KMMR11**	→ 04/08	Copper	1.1	04
	121	G4KD	01/08 →	**CT5KHMR11**		Copper	1.1	04
2.4	119	G4KC	01/05 →	**CT5KHMR11**	→ 12/07	Copper	1.1	04
	125	G4KC	06/08 → 12/09	**CT5KHMR11**		Copper	1.1	04
	127	G4KE	06/08 →	**CT5KHMR11**		Copper	1.1	04
SONATA VI								
2.0	110	G4KD	01/09 →	**CT5KHMR11**		Copper	1.1	04
2.0 i	121	G4KD	01/11 →	**CT5KHMR11**		Copper	1.1	04
2.4	128	G4KC	01/09 →	**CT5KHMR11**		Copper	1.1	04
	131	G4KC	01/09 →	**CT5KHMR11**		Copper	1.1	04
TB								
1.1	46	G4HD	09/02 → 09/05	**CT5KMMR11**		Copper	1.1	04
	49	G4HG	09/05 → 06/09	**CT5KMMR11**	11/06 →	Copper	1.1	04
	49	G4HD	09/05 → 06/09	**CT5KMMR11**	11/06 →	Copper	1.1	04
1.3	61	G4EA	09/04 → 06/09	**CT5KMMR11**		Copper	1.1	04
	63	G4EA	09/03 → 09/05	**CT5KMMR11**	→ 03/04	Copper	1.1	04
1.3 i	60	G4EA	09/02 → 03/04	**CT5KMMR11**		Copper	1.1	04
1.4 i	71	G4EE	08/05 →	**CT5KMMR11**	11/06 →	Copper	1.1	04

	kW					CORE		QTY
HYUNDAI								
TB								
1.5 i	73	G4EC-G	09/02 → 10/05	**CT5KMMR11**		Copper	1.1	04
	73	G4ER	09/02 → 10/05	**CT5KMMR11**		Copper	1.1	04
1.6	77	G4ED-G	09/02 → 09/05	**CT5KMMR11**		Copper	1.1	04
	78	G4ED-G	08/05 →	**CT5KMMR11**	→ 08/06	Copper	1.1	04
TERRACAN								
3.5 i V6 4WD	143	G6CU	12/01 → 12/06	**CT5KMMR11**	→ 02/02	Copper	1.1	06
TIBURON								
1.6 16V	79	G4ED-G	03/02 → 08/09	**CT5KMMR11**	→ 08/06	Copper	1.1	04
	77	G4ED-G	03/02 → 08/09	**CT5KMMR11**	→ 08/06	Copper	1.1	04
	85	G4GR	03/98 → 04/02	**CT5KMMR11**		Copper	1.1	04
1.6 i 16V	84	G4ED	12/96 → 04/02	**CT5KMMR11**		Copper	1.1	04
2.0	100	G4GC-G	08/10 → 08/09	**CT5KMMR11**	→ 12/06	Copper	1.1	04
	102	G4GC-G	03/02 → 08/09	**CT5KMMR11**	09/06 →	Copper	1.1	04
2.0 16V	102	G4GF	08/96 → 04/02	**CT5KMMR11**		Copper	1.1	04
2.0 FX	102	G4GF	08/96 → 04/02	**CT5KMMR11**		Copper	1.1	04
2.0 GLS	105	G4GC-G	02/03 → 08/09	**CT5KMMR11**	→ 12/06	Copper	1.1	04
TRAJET								
2.0	103	G4GC-G	01/04 → 07/08	**CT5KMMR11**	09/06 →	Copper	1.1	04
	104	G4GC	11/03 → 07/08	**CT5KMMR11**	→ 12/06	Copper	1.1	04
2.0 GL	103	G4GC-G	01/04 → 07/08	**CT5KMMR11**	09/06 →	Copper	1.1	04
2.7 GLS V6	127	G6BA-G	09/00 → 07/08	**CT5KMMR11**	03/04 → 06/07	Copper	1.1	06
2.7 V6	127	G6BA-G	09/00 → 07/08	**CT5KMMR11**	03/04 → 06/07	Copper	1.1	06
TUCSON								
2.0	104	G4GC	08/04 → 03/10	**CT5KMMR11**	→ 12/06	Copper	1.1	04
	105	G4GC	01/10 → 03/10	**CT5KMMR11**		Copper	1.1	04
	120	G4KD	01/10 →	**CT5KHMR11**		Copper	1.1	04
	122	G4KD	01/10 →	**CT5KHMR11**		Copper	1.1	04
2.0 4WD	120	G4KD	01/10 →	**CT5KHMR11**		Copper	1.1	04
2.0 CVVT 4WD	122	G4KD	08/09 →	**CT5KHMR11**		Copper	1.1	04
2.0 GDi	122	G4NC	08/13 →	**CT5KHMR11**		Copper	1.1	04
2.0 GDi 4WD	122	G4NC	08/13 →	**CT5KHMR11**		Copper	1.1	04
2.0 GLS	105	G4GC	01/10 → 03/10	**CT5KMMR11**		Copper	1.1	04
	120	G4KD	01/10 →	**CT5KHMR11**		Copper	1.1	04
2.0 Trazione integrale	104	G4GC	08/04 → 03/10	**CT5KMMR11**	→ 12/06	Copper	1.1	04
	104	G4GC	07/05 → 11/10	**CT5KMMR11**		Copper	1.1	04
2.4 DCVVT-I 4WD	128	G4KE	07/10 → 12/13	**CT5KHMR11**		Copper	1.1	04
TUSCANI								
1.6 16V	77	G4ED-G	03/02 → 08/09	**CT5KMMR11**	→ 08/06	Copper	1.1	04
	79	G4ED-G	03/02 → 08/09	**CT5KMMR11**	→ 08/06	Copper	1.1	04
2.0	100	G4GC-G	08/10 → 08/09	**CT5KMMR11**	→ 12/06	Copper	1.1	04
	102	G4GC-G	03/02 → 08/09	**CT5KMMR11**	09/06 →	Copper	1.1	04
2.0 GLS	105	G4GC-G	02/03 → 08/09	**CT5KMMR11**	→ 12/06	Copper	1.1	04

	kW					CORE		QTY
HYUNDAI								
VERNA II								
1.3	55	G4EA	01/00 → 11/05	**CT5KMMR11**	→ 01/03	Copper	1.1	04
	61	G4EA	01/00 → 11/05	**CT5KMMR11**	→ 01/03	Copper	1.1	04
	62	G4EH	08/02 → 11/05	**CT5KMMR11**		Copper	1.1	04
	63	G4EA	01/00 → 11/05	**CT5KMMR11**	→ 01/03	Copper	1.1	04
1.5	65	G4EK	09/99 → 10/02	**CT5KMMR11**		Copper	1.1	04
	66	G4EB	01/00 → 11/05	**CT5KMMR11**	→ 01/03	Copper	1.1	04
	75	G4FK	09/99 → 10/02	**CT5KMMR11**		Copper	1.1	04
	75	G4EC-G	09/00 → 11/05	**CT5KMMR11**	→ 01/03	Copper	1.1	04
1.6	77	G4ED-G	12/02 → 11/05	**7LPR**		Nickel	0.8	04
	77	G4ED-G	12/02 → 11/05	**CT5KMMR11**		Copper	1.1	04
	77	G4ED-G	12/02 → 11/05	**CT6KMR**		Copper	0.8	04
VERNA III								
1.4 GL	71	G4EE	11/05 → 11/10	**CT5KMMR11**		Copper	1.1	04
	71	G4EE	11/05 → 11/10	**CT6KMR**		Copper	0.8	04
	71	G4EE	11/05 → 11/10	**7LPR**		Nickel	0.8	04
1.6 GLS	82	G4ED	11/05 → 11/10	**CT5KMMR11**		Copper	1.1	04
INFINITI								
QX								
3.3	125	VG33E	01/97 →	**CT5KMMR11**		Copper	1.1	06
QX4								
3.3	125	VG33E	01/97 →	**CT5KMMR11**		Copper	1.1	06
INNOCENTI								
ELBA (146)								
1.3 (146CW)	49	146 A5.000	08/91 → 12/96	**CW7LPR**	→ 12/92	Nickel	0.8	04
	49	146 A5.000	08/91 → 12/96	**CT6FMR**	→ 12/92	Copper	0.8	04
1.4 i.e. (146EN, 146EQ)	49	146 C5.000	09/94 → 12/96	**CW7LPR**		Nickel	0.8	04
	49	146 D5.000	09/94 → 12/96	**CW7LPR**		Nickel	0.8	04
	49	146 C5.000	09/94 → 12/96	**7LPR**		Nickel	0.8	04
	49	146 D5.000	09/94 → 12/96	**7LPR**		Nickel	0.8	04
	49	146 C5.000	09/94 → 12/96	**CT6KMR**		Copper	0.8	04
	49	146 D5.000	09/94 → 12/96	**CT6KMR**		Copper	0.8	04
	49	146 C5.000	09/94 → 12/96	**CT6FMR**		Copper	0.8	04
	49	146 D5.000	09/94 → 12/96	**CT6FMR**		Copper	0.8	04
ISUZU								
BIGHORN II								
3.2	130	6VD1	08/91 → 07/98	**CT6KMR11**	01/98 →	Copper	1.1	06
GEMINI								
1.6 GTI 16V	84	4XE1	08/88 → 12/90	**CT6KMR11**		Copper	1.1	04

	kW					CORE		QTY
ISUZU								
MIDI								
2.0	61	4ZC1	06/88 →	**CT6FMR**		Copper	0.8	04
2.0 (98000)	61	4ZC1	01/89 →	**CT6FMR**	→ 10/91	Copper	0.8	04
	61	4ZC1	01/89 →	**CW7LPR**	→ 10/91	Nickel	0.8	04
2.0 4WD	61	4ZC1	09/88 →	**CT6FMR**		Copper	0.8	04
2.0 4WD (94000)	61	4ZC1	01/89 →	**CW7LPR**	→ 10/91	Nickel	0.8	04
	61	4ZC1	01/89 →	**CT6FMR**	→ 10/91	Copper	0.8	04
PICKUP								
2.3	70	4ZD1	10/87 → 08/96	**CW7LPR**		Nickel	0.8	04
	70	4ZD1	10/87 → 08/96	**CT6FMR**		Copper	0.8	04
2.6 LS	84	4ZE1	10/89 → 08/96	**CW7LPR**		Nickel	0.8	04
	90	4ZE1	10/87 → 08/90	**CT6FMR**		Copper	0.8	04
RODEO								
2.3	70	4ZD1	10/87 → 08/96	**CW7LPR**		Nickel	0.8	04
	70	4ZD1	10/87 → 08/96	**CT6FMR**		Copper	0.8	04
2.6 LS	84	4ZE1	10/89 → 08/96	**CW7LPR**		Nickel	0.8	04
	90	4ZE1	10/87 → 08/90	**CT6FMR**		Copper	0.8	04
TROOPER II								
3.2	130	6VD1	08/91 → 07/98	**CT6KMR11**	01/98 →	Copper	1.1	06
JAGUAR								
XJ								
4.0	163	9EPCNA	05/91 → 09/94	**CT6KMMR**		Copper	0.8	06
4.0 XJS	163	9EPCNA	05/91 → 09/94	**CT6KMMR**		Copper	0.8	06
6 3.2	155	9JPGRB	11/94 → 07/97	**CT6KMMR**		Copper	0.8	06
6 3.2 24V	146	9BPMNA	09/90 → 11/94	**CT6KMMR**		Copper	0.8	06
6 4.0	163	9EPCNA	09/89 → 11/94	**7LPR**		Nickel	0.8	06
6 Sovereign 4.0	177	9JPFRB	11/94 → 07/97	**CT6KMR**		Copper	0.8	06
JEEP								
CHEROKEE								
2.5	89	EPE	10/90 → 09/96	**A5KMR**		Copper	1.1	04
	89	EPE	10/95 → 09/01	**A5KMR**		Copper	1.1	04
2.5 i 4x4	90	EPE	12/91 → 09/01	**A5KMR**		Copper	1.1	04
	90	HX	12/91 → 09/01	**A5KMR**		Copper	1.1	04
2.5 SE	87	EPE	10/96 → 09/99	**A5KMR**		Copper	1.1	04
4.0 i	135	MX	02/99 → 09/01	**A5KMR**		Copper	1.1	06
	136	ERH	01/88 → 09/01	**A5KMR**		Copper	1.1	06
4.0 i 4x4	131	ERH	01/95 → 09/01	**A5KMR**		Copper	1.1	06
COMMANDER								
4.7 V8 4x4	170	EVA	09/05 → 12/10	**A5KMR**		Copper	1.1	08

	kW					CORE		QTY
JEEP								
GRAND CHEROKEE II								
4.0	140	ERH	10/98 → 09/04	**A5KMR**		Copper	1.1	06
4.0 4x4	140	ERH	04/99 → 09/05	**A5KMR**		Copper	1.1	06
4.7 V8 4x4	162	EVA	04/99 → 08/00	**A5KMR**		Copper	1.1	08
	167	EVA	06/03 → 09/05	**A5KMR**		Copper	1.1	08
	190	EVC	10/01 → 09/05	**A5KMR**		Copper	1.1	08
GRAND CHEROKEE III								
4.7 V8 4x4	170	EVA	06/05 → 12/10	**A5KMR**	→ 05/07	Copper	1.1	08
WAGONEER								
2.5	89	EPE	10/90 → 09/96	**A5KMR**		Copper	1.1	04
	89	EPE	10/95 → 09/01	**A5KMR**		Copper	1.1	04
2.5 i 4x4	90	EPE	12/91 → 09/01	**A5KMR**		Copper	1.1	04
	90	HX	12/91 → 09/01	**A5KMR**		Copper	1.1	04
2.5 SE	87	EPE	10/96 → 09/99	**A5KMR**		Copper	1.1	04
4.0 i	136	ERH	01/88 → 09/01	**A5KMR**		Copper	1.1	06
	135	MX	02/99 → 09/01	**A5KMR**		Copper	1.1	06
	135	MX	12/91 → 09/01	**A5KMR**		Copper	1.1	06
4.0 i 4x4	131	ERH	01/95 → 09/01	**A5KMR**		Copper	1.1	06
WRANGLER								
2.5	89	EPE	12/91 → 08/96	**A5KMR**		Copper	1.1	04
4.0	131	ERH	12/91 → 08/96	**A5KMR**		Copper	1.1	06
WRANGLER II								
2.5	87	P00	08/96 → 04/07	**A5KMR**		Copper	1.1	04
4.0	130	S01	08/96 → 04/07	**A5KMR**		Copper	1.1	06
4.0 Rubicon	128	ERH	08/03 → 04/07	**A5KMR**		Copper	1.1	06

KIA								
CARENS I								
1.8 i	81	T8	11/00 → 07/02	**7LPR**		Nickel	0.8	04
	81	T8	11/00 → 07/02	**CT6KMR**		Copper	0.8	04
CARENS II								
1.6	77	GA6D	07/02 →	**CT6KMR11**	→ 05/06	Copper	1.1	04
1.8	93	TB	07/02 →	**7LPR**	→ 05/06	Nickel	0.8	04
	93	TB	07/02 →	**CT6KMR**	→ 05/06	Copper	0.8	04
2.0 CVVT	102	G4GC	08/04 →	**CT5KMMR11**	09/06 →	Copper	1.1	04
CARENS III								
2.0 CVVT	106	G4KA	09/06 →	**CT5KMMR11**		Copper	1.1	04
CERATO								
1.6	77	G4ED	07/04 →	**CT5KMMR11**	→ 12/08	Copper	1.1	04
1.6 16V	77	G4ED	04/04 →	**CT5KMMR11**	→ 12/08	Copper	1.1	04
1.8	85	T8	10/01 → 07/04	**7LPR**		Nickel	0.8	04
	85	T8	10/01 → 07/04	**CT6KMR**		Copper	0.8	04
2.0	105	G4GC	04/04 →	**CT5KMMR11**	→ 12/08	Copper	1.1	04
2.0 MPi	110	G4KD	06/13 →	**CT5KHMR11**		Copper	1.1	04

	kW					CORE		QTY
KIA								
CERATO II								
2.0	115	G4KD	01/09 →	**CT5KHMR11**		Copper	1.1	04
CLARUS								
1.8 i 16V	85	T8	07/96 →	**CT5KMMR**	→ 07/01	Copper	0.8	04
2.0 i 16V	98	FE (16V)	07/96 →	**CT6KMR11**	→ 07/01	Copper	1.1	04
CREDOS								
1.8 i 16V	85	T8	07/96 →	**CT5KMMR**	→ 07/01	Copper	0.8	04
2.0 i 16V	98	FE (16V)	07/96 →	**CT6KMR11**	→ 07/01	Copper	1.1	04
FORTE								
2.0 MPi	110	G4KD	06/13 →	**CT5KHMR11**		Copper	1.1	04
FORTE II								
2.0	115	G4KD	01/09 →	**CT5KHMR11**		Copper	1.1	04
K3								
2.0 MPi	110	G4KD	06/13 →	**CT5KHMR11**		Copper	1.1	04
K3 II								
2.0	115	G4KD	01/09 →	**CT5KHMR11**		Copper	1.1	04
K5								
2.4	132	G4KJ	03/12 →	**CT5KHMR11**		Copper	1.1	04
	149	G4KJ	09/10 →	**CT5KHMR11**		Copper	1.1	04
2.4 EX	132	G4KJ	03/12 →	**CT5KHMR11**		Copper	1.1	04
MAGENTIS								
2.0	106	G4KA	11/05 →	**CT5KMMR11**	→ 05/08	Copper	1.1	04
2.0 EX	121	G4KD	07/09 →	**CT5KHMR11**	→ 08/10	Copper	1.1	04
MORNING								
1.0	45	G4HE	04/04 →	**CT5KMMR11**	→ 12/07	Copper	1.1	04
	46	G4HE	11/09 →	**CT5KMMR11**	→ 04/11	Copper	1.1	04
1.0 EX	45	G4HE	04/04 →	**CT5KMMR11**	→ 12/07	Copper	1.1	04
1.1	48	G4HG	04/04 →	**CT5KMMR11**	→ 01/11	Copper	1.1	04
1.1 EX	48	G4HG	04/04 →	**CT5KMMR11**	→ 01/11	Copper	1.1	04
OPTIMA								
2.0	106	G4KA	11/05 →	**CT5KMMR11**	→ 05/08	Copper	1.1	04
2.0 EX	121	G4KD	07/09 →	**CT5KHMR11**	→ 08/10	Copper	1.1	04
2.4	132	G4KJ	03/12 →	**CT5KHMR11**		Copper	1.1	04
	149	G4KJ	09/10 →	**CT5KHMR11**		Copper	1.1	04
2.4 EX	132	G4KJ	03/12 →	**CT5KHMR11**		Copper	1.1	04
PICANTO								
1.0	45	G4HE	04/04 →	**CT5KMMR11**	→ 12/07	Copper	1.1	04
	46	G4HE	11/09 →	**CT5KMMR11**	→ 04/11	Copper	1.1	04
1.0 EX	45	G4HE	04/04 →	**CT5KMMR11**	→ 12/07	Copper	1.1	04
1.1	48	G4HG	04/04 →	**CT5KMMR11**	→ 01/11	Copper	1.1	04
1.1 EX	48	G4HG	04/04 →	**CT5KMMR11**	→ 01/11	Copper	1.1	04
PRIDE								
1.6 CVVT LX	82	G4ED	03/05 →	**CT5KMMR11**		Copper	1.1	04

	kW					CORE		QTY
KIA								
PRIDE II								
1.4 16V	71	G4EE	03/05 →	**CT5KMMR11**		Copper	1.1	04
1.6 CVVT	82	G4ED	03/05 →	**CT5KMMR11**		Copper	1.1	04
RETONA								
2.0 16V	94	FE (16V)	05/00 →	**CT6KMR11**		Copper	1.1	04
RIO								
1.5	70	A5D	09/02 →	**CT6KMR**		Copper	0.8	04
	70	A5D	09/02 → 02/05	**7LPR**		Nickel	0.8	04
1.5 16V	71	A5D	09/02 → 02/05	**CT6KMR**		Copper	0.8	04
	72	A5D	09/00 → 02/05	**7LPR**		Nickel	0.8	04
RIO II								
1.4 16V	71	G4EE	03/05 →	**CT5KMMR11**		Copper	1.1	04
1.6 CVVT	82	G4ED	03/05 →	**CT5KMMR11**		Copper	1.1	04
RONDO III								
2.0 CVVT	106	G4KA	09/06 →	**CT5KMMR11**		Copper	1.1	04
SEPHIA								
1.5	59	OK280	03/96 → 12/98	**CT5KMMR11**	09/98 →	Copper	1.1	04
1.5 i 16V	65	ZYVE	10/97 → 10/01	**CT5KMMR11**	04/99 →	Copper	1.1	04
	65	BFD	10/97 → 03/01	**CT5KMMR11**		Copper	1.1	04
1.6	75	GA6D	10/05 → 12/01	**CT5KMMR11**		Copper	1.1	04
1.8 i 16V	81	T8	10/97 → 03/01	**CT5KMMR**	→ 08/98	Copper	0.8	04
	81	T8	10/97 → 03/01	**CT6KMR**	→ 08/98	Copper	0.8	04
	82	OK26Y	01/95 → 10/97	**CT5KMMR**		Copper	0.8	04
	82	OK24N	01/95 → 10/97	**CT5KMMR**		Copper	0.8	04
	81	T8	10/97 → 03/01	**7LPR**	→ 08/98	Nickel	0.8	04
SHUMA								
1.5	59	OK280	03/96 → 12/98	**CT5KMMR11**	09/98 →	Copper	1.1	04
1.5 i 16V	65	BFD	10/97 → 03/01	**CT5KMMR11**		Copper	1.1	04
	65	ZYVE	10/97 → 03/01	**CT5KMMR11**		Copper	1.1	04
1.6	75	GA6D	10/05 → 12/01	**CT5KMMR11**		Copper	1.1	04
1.8 i 16V	81	T8	10/97 → 03/01	**7LPR**	→ 08/98	Nickel	0.8	04
	81	T8	10/97 → 03/01	**CT5KMMR**	→ 08/98	Copper	0.8	04
SHUMA II								
1.6	75	GA6D	05/01 → 08/04	**CT5KMMR11**		Copper	1.1	04
1.8	81	T8	05/01 → 06/04	**7LPR**		Nickel	0.8	04
	84	T8	04/03 → 08/04	**CT6KMR**		Copper	0.8	04
SORENTO II								
2.4 CVVT	128	G4KE	11/09 →	**CT5KHMR11**		Copper	1.1	04
2.4 CVVT 4WD	128	G4KE	11/09 →	**CT5KHMR11**		Copper	1.1	04
2.4 EX CVVT	128	G4KE	11/09 →	**CT5KHMR11**		Copper	1.1	04
SPECTRA								
1.6	77	G4ED	04/04 →	**CT5KMMR11**	→ 12/08	Copper	1.1	04
1.6 16V	77	G4ED	04/04 →	**CT5KMMR11**	→ 12/08	Copper	1.1	04
1.8	85	T8	10/01 → 07/04	**CT6KMR**		Copper	0.8	04
2.0	105	G4GC	04/04 →	**CT5KMMR11**	→ 12/08	Copper	1.1	04

	kW					CORE		QTY
KIA								
SPECTRA II								
1.6	75	GA6D	05/01 → 08/04	**CT5KMMR11**		Copper	1.1	04
1.8	81	T8	05/01 → 06/04	**CT6KMR**		Copper	0.8	04
	84	T8	04/03 → 08/04	**7LPR**		Nickel	0.8	04
SPORTAGE								
2.0	87	FE (16V)	10/00 → 08/03	**CT6KMR11**		Copper	1.1	04
2.0 16V 4WD	104	G4GC	09/04 →	**CT5KMMR11**	09/06 →	Copper	1.1	04
2.0 4WD	87	FE (16V)	10/00 → 08/03	**CT6KMR11**		Copper	1.1	04
2.0 CVVT	120	G4KD	07/10 →	**CT5KHMR11**		Copper	1.1	04
	122	G4KD	07/10 →	**CT5KHMR11**		Copper	1.1	04
2.0 CVVT AWD	120	G4KD	07/10 →	**CT5KHMR11**		Copper	1.1	04
	122	G4KD	07/10 →	**CT5KHMR11**		Copper	1.1	04
2.0 GDI	122	G4NC	02/14 →	**CT5KHMR11**		Copper	1.1	04
2.0 GDI AWD	122	G4NC	02/14 →	**CT5KHMR11**		Copper	1.1	04
2.0 i 16V	104	G4GC	09/04 →	**CT5KMMR11**	→ 12/06	Copper	1.1	04
	94	FE (16V)	10/99 → 08/03	**CT6KMR11**		Copper	1.1	04
2.0 i 16V 4WD	94	FE (16V)	04/94 → 08/03	**CT6KMR11**		Copper	1.1	04
2.0 i 4WD	70	FE (8V)	04/94 → 08/99	**CT5KMMR**		Copper	0.8	04
2.0 i LX 16V	94	FE (16V)	04/94 → 08/03	**CT6KMR11**		Copper	1.1	04
2.0 LX CVVT	120	G4KD	07/10 →	**CT5KHMR11**		Copper	1.1	04

LADA								
110								
1.5	52	BA3 2111	02/92 → 08/94	**CT6FMR**		Copper	0.8	04
	54	BA3 2111	01/95 →	**CT6FMR**	→ 01/07	Copper	0.8	04
	56	VAZ-2111	10/00 →	**CT6FMR**	→ 01/09	Copper	0.8	04
	57	VAZ-2111	01/95 →	**CT6FMR**	→ 01/09	Copper	0.8	04
1.6	60	VAZ-21114	01/00 →	**CT6FMR**	→ 10/08	Copper	0.8	04
	72	VAZ-21114	01/95 → 12/07	**CT6FMR**		Copper	0.8	04
2.0 i	110	C 20 XE	08/96 →	**CT6KMR**		Copper	0.8	04
111								
1.5	56	VAZ-2111	10/00 →	**CT6FMR**	→ 01/09	Copper	0.8	04
	57	VAZ-2111	01/96 →	**CT6FMR**	→ 01/09	Copper	0.8	04
	58	VAZ-2111	10/00 →	**CT6FMR**	→ 01/09	Copper	0.8	04
1.6	60	VAZ-21114	01/05 →	**CT6FMR**		Copper	0.8	04
112								
1.5	54	VAZ-2111	01/95 →	**CT6FMR**	→ 01/08	Copper	0.8	04
	56	VAZ-2111	10/00 →	**CT6FMR**	→ 01/08	Copper	0.8	04
	57	VAZ-2111	01/95 →	**CT6FMR**	→ 01/08	Copper	0.8	04
1.6	60	VAZ-21114	01/05 →	**CT6FMR**		Copper	0.8	04
CARLOTA								
1100	39	BA3 21081	02/88 → 12/94	**CT6FMR**		Copper	0.8	04
	43	BA3 21081	02/96 →	**CT6FMR**		Copper	0.8	04

	kW					CORE		QTY
LADA								
CARLOTA								
1300	45	BA3 2108	09/91 →	**CT6FMR**		Copper	0.8	04
	46	BA3 2108	01/88 →	**CT6FMR**		Copper	0.8	04
	50	BA3 21115	02/96 →	**CT6FMR**		Copper	0.8	04
1500	50	BA3 21083	09/91 →	**CT6FMR**	06/95 → 07/03	Copper	0.8	04
	52	BA3 2111	02/95 →	**CT6FMR**	→ 07/03	Copper	0.8	04
	53	BA3 21083	01/88 →	**CT6FMR**		Copper	0.8	04
1.5	57	VAZ-2111	02/92 → 08/94	**CT6FMR**		Copper	0.8	04
CEVARO								
1100	39	BA3 21081	02/88 → 12/94	**CT6FMR**		Copper	0.8	04
	43	BA3 21081	02/96 →	**CT6FMR**		Copper	0.8	04
1300	45	BA3 2108	09/91 →	**CT6FMR**		Copper	0.8	04
	46	BA3 2108	01/88 →	**CT6FMR**		Copper	0.8	04
	50	BA3 21115	02/96 →	**CT6FMR**		Copper	0.8	04
1500	50	BA3 21083	09/91 →	**CT6FMR**	06/95 → 07/03	Copper	0.8	04
	52	BA3 2111	02/95 →	**CT6FMR**	→ 07/03	Copper	0.8	04
	53	BA3 21083	01/88 →	**CT6FMR**		Copper	0.8	04
1.5	57	VAZ-2111	02/92 → 08/94	**CT6FMR**		Copper	0.8	04
DIVA								
1100	39	BA3 21081	07/91 →	**CW7LPR**		Nickel	0.8	04
	39	BA3 21081	07/91 →	**CT6FMR**		Copper	0.8	04
1300	45	BA3 2108	07/91 →	**CW7LPR**		Nickel	0.8	04
	45	BA3 2108	07/91 →	**CT6FMR**		Copper	0.8	04
	46	BA3 2108	05/90 →	**CW7LPR**		Nickel	0.8	04
	46	BA3 2108	05/90 →	**CT6FMR**		Copper	0.8	04
	48	BA3 2108	05/89 → 07/97	**CW7LPR**		Nickel	0.8	04
	48	BA3 2108	05/89 → 07/97	**CT6FMR**		Copper	0.8	04
	50	BA3 21115	02/96 →	**CW7LPR**		Nickel	0.8	04
	50	BA3 21115	02/96 →	**CT6FMR**		Copper	0.8	04
1500	50	BA3 21083	07/91 →	**CW7LPR**		Nickel	0.8	04
	50	BA3 21083	07/91 →	**CT6FMR**		Copper	0.8	04
	52	BA3 2111	11/94 →	**CW7LPR**		Nickel	0.8	04
	52	BA3 2111	11/94 →	**CT6FMR**		Copper	0.8	04
	53	BA3 21083	09/91 →	**CW7LPR**		Nickel	0.8	04
	53	BA3 21083	09/91 →	**CT6FMR**		Copper	0.8	04
1.5	57	VAZ-2111	01/00 →	**CW7LPR**		Nickel	0.8	04
	57	VAZ-2111	02/92 → 08/94	**CT6FMR**		Copper	0.8	04
	59	VAZ-2111	08/03 →	**CW7LPR**		Nickel	0.8	04
	59	VAZ-2111	08/03 → 12/07	**CT6FMR**		Copper	0.8	04
GRANTA								
1.6	72	VAZ-21126	10/11 →	**7LPR**		Nickel	0.8	04
	72	VAZ-21126	10/11 →	**CT6KMR**		Copper	0.8	04
KALINA								
1.6	60	VAZ-21114	10/04 →	**CW7LPR**	→ 10/08	Nickel	0.8	04
	60	VAZ-21124	10/04 →	**CT6FMR**		Copper	0.8	04

	kW					CORE		QTY
LADA								
KALINKA								
1500	49	BA3 2103	05/93 → 04/05	**CT6FMR**		Copper	0.8	04
	49	BA3 2103	08/94 →	**CT6FMR**	→ 01/96	Copper	0.8	04
	49	BA3 2103	05/93 → 04/04	**CW7LPR**		Nickel	0.8	04
1500 S (WAS21093)	52	BA3 21083	06/89 →	**CT6FMR**		Copper	0.8	04
	52	BA3 21083	06/89 →	**CW7LPR**		Nickel	0.8	04
1600 (WAS21074)	56	BA3 2106	01/88 → 10/01	**CT6FMR**		Copper	0.8	04
	56	BA3 2106	01/88 → 10/01	**CW7LPR**		Nickel	0.8	04
1.6 (WAS21074)	56	BA3 2106	01/88 → 10/01	**CT6FMR**		Copper	0.8	04
	56	BA3 2106	01/88 → 10/01	**CW7LPR**		Nickel	0.8	04
1700	62	B032123	08/94 →	**CT6FMR**		Copper	0.8	04
1700 i Classic (VAZ2107)	62	B032123	06/96 →	**CT6FMR**		Copper	0.8	04
	62	B032123	06/96 →	**CW7LPR**		Nickel	0.8	04
LAIKA								
1500	49	BA3 2103	05/93 → 04/04	**CW7LPR**		Nickel	0.8	04
	49	BA3 2103	05/93 → 04/05	**CT6FMR**		Copper	0.8	04
1500 S (WAS21093)	52	BA3 21083	06/89 →	**CW7LPR**		Nickel	0.8	04
	52	BA3 21083	06/89 →	**CT6FMR**		Copper	0.8	04
1600 (WAS21074)	56	BA3 2106	01/88 → 10/01	**CW7LPR**		Nickel	0.8	04
	56	BA3 2106	01/88 → 10/01	**CT6FMR**		Copper	0.8	04
1.6 (WAS21074)	56	BA3 2106	01/88 → 10/01	**CW7LPR**		Nickel	0.8	04
	56	BA3 2106	01/88 → 10/01	**CT6FMR**		Copper	0.8	04
1700 i Classic (VAZ2107)	62	B032123	06/96 →	**CW7LPR**		Nickel	0.8	04
	62	B032123	06/96 →	**CT6FMR**		Copper	0.8	04
LARGUS								
1.6	62	VAZ-K7M	03/12 →	**7LPR**		Nickel	0.8	04
	62	VAZ-K7M	03/12 →	**CT6KMR**		Copper	0.8	04
MATRIUSHKA								
1500	49	BA3 2103	08/94 →	**CT6FMR**	→ 01/96	Copper	0.8	04
1700	62	B032123	08/94 →	**CT6FMR**		Copper	0.8	04
NADESCHDA								
1.7	60	VAZ-2121.3	12/97 → 12/06	**CT6FMR**		Copper	0.8	04
1.8	60	VAZ-2130	12/97 → 12/06	**CT6FMR**		Copper	0.8	04
1.8 i	67	VAZ-2130.1	12/97 → 12/06	**CT6FMR**		Copper	0.8	04
NIVA								
1.6	54	BA3 2121	01/87 → 03/95	**CT6FMR**		Copper	0.8	04
1600 4x4	54	BA3 2121	01/87 → 03/95	**CW7LPR**		Nickel	0.8	04
1.7 i	59	BA3 21214	06/96 →	**CT6FMR**		Copper	0.8	04
1700 i	60	BA3 21214	10/00 →	**CT6FMR**		Copper	0.8	04
	59	BA3 21214	06/96 →	**CW7LPR**		Nickel	0.8	04
	60	BA3 21214	10/00 →	**CW7LPR**		Nickel	0.8	04
1700 i 4x4	60	BA3 21214	10/00 →	**CT6FMR**		Copper	0.8	04
	60	BA3 21214	10/00 →	**CW7LPR**		Nickel	0.8	04

	kW					CORE		QTY
LADA								
NIVA II								
1.7	61	BA3 21214	08/04 →	**CT6FMR**		Copper	0.8	04
	61	BA3 21214	08/04 →	**CW7LPR**		Nickel	0.8	04
NOVA								
1500	49	BA3 2103	05/93 → 04/04	**CW7LPR**		Nickel	0.8	04
	49	BA3 2103	05/93 → 04/05	**CT6FMR**		Copper	0.8	04
1500 S (WAS21093)	52	BA3 21083	06/89 →	**CW7LPR**		Nickel	0.8	04
	52	BA3 21083	06/89 →	**CT6FMR**		Copper	0.8	04
1600 (WAS21074)	56	BA3 2106	01/88 → 10/01	**CW7LPR**		Nickel	0.8	04
	56	BA3 2106	01/88 → 10/01	**CT6FMR**		Copper	0.8	04
1.6 (WAS21074)	56	BA3 2106	01/88 → 10/01	**CW7LPR**		Nickel	0.8	04
	56	BA3 2106	01/88 → 10/01	**CT6FMR**		Copper	0.8	04
1700 i Classic (VAZ2107)	62	B032123	06/96 →	**CW7LPR**		Nickel	0.8	04
	62	B032123	06/96 →	**CT6FMR**		Copper	0.8	04
NOVA Station wagon								
1500	49	BA3 2103	08/94 →	**CT6FMR**	→ 01/96	Copper	0.8	04
1700	62	B032123	08/94 →	**CT6FMR**		Copper	0.8	04
OKA								
0.8	26	B6113E	02/88 →	**CT6FMR**		Copper	0.8	02
RIVA								
1500	49	BA3 2103	05/93 → 04/05	**CT6FMR**		Copper	0.8	04
	49	BA3 2103	05/93 → 04/04	**CW7LPR**		Nickel	0.8	04
1500 S (WAS21093)	52	BA3 21083	06/89 →	**CT6FMR**		Copper	0.8	04
	52	BA3 21083	06/89 →	**CW7LPR**		Nickel	0.8	04
1600 (WAS21074)	56	BA3 2106	01/88 → 10/01	**CT6FMR**		Copper	0.8	04
	56	BA3 2106	01/88 → 10/01	**CW7LPR**		Nickel	0.8	04
1.6 (WAS21074)	56	BA3 2106	01/88 → 10/01	**CT6FMR**		Copper	0.8	04
	56	BA3 2106	01/88 → 10/01	**CW7LPR**		Nickel	0.8	04
1700 i Classic (VAZ2107)	62	B032123	06/96 →	**CT6FMR**		Copper	0.8	04
RIVA Station wagon								
1500	49	BA3 2103	08/94 →	**CT6FMR**	→ 01/96	Copper	0.8	04
1700	62	B032123	08/94 →	**CT6FMR**		Copper	0.8	04
SABLE								
1100	39	BA3 21081	07/91 →	**CW7LPR**		Nickel	0.8	04
	39	BA3 21081	07/91 →	**CT6FMR**		Copper	0.8	04
1300	45	BA3 2108	07/91 →	**CW7LPR**		Nickel	0.8	04
	46	BA3 2108	05/90 →	**CW7LPR**		Nickel	0.8	04
	48	BA3 2108	05/89 → 07/97	**CW7LPR**		Nickel	0.8	04
	50	BA3 21115	02/96 →	**CW7LPR**		Nickel	0.8	04
	45	BA3 2108	07/91 →	**CT6FMR**		Copper	0.8	04
	46	BA3 2108	05/90 →	**CT6FMR**		Copper	0.8	04
	48	BA3 2108	05/89 → 07/97	**CT6FMR**		Copper	0.8	04
	50	BA3 21115	02/96 →	**CT6FMR**		Copper	0.8	04

	kW					CORE		QTY
LADA								
SABLE								
1500	50	BA3 21083	07/91 →	**CW7LPR**		Nickel	0.8	04
	52	BA3 2111	11/94 →	**CW7LPR**		Nickel	0.8	04
	53	BA3 21083	09/91 →	**CW7LPR**		Nickel	0.8	04
	50	BA3 21083	07/91 →	**CT6FMR**		Copper	0.8	04
	52	BA3 2111	11/94 →	**CT6FMR**		Copper	0.8	04
	53	BA3 21083	09/91 →	**CT6FMR**		Copper	0.8	04
1.5	57	VAZ-2111	01/00 →	**CW7LPR**		Nickel	0.8	04
	59	VAZ-2111	08/03 →	**CW7LPR**		Nickel	0.8	04
	57	VAZ-2111	02/92 → 08/94	**CT6FMR**		Copper	0.8	04
	59	VAZ-2111	08/03 → 12/07	**CT6FMR**		Copper	0.8	04
SAGONA								
1100	39	BA3 21081	07/91 →	**CT6FMR**		Copper	0.8	04
	39	BA3 21081	07/91 →	**CW7LPR**		Nickel	0.8	04
1300	45	BA3 2108	07/91 →	**CT6FMR**		Copper	0.8	04
	46	BA3 2108	05/90 →	**CT6FMR**		Copper	0.8	04
	48	BA3 2108	05/89 → 07/97	**CT6FMR**		Copper	0.8	04
	50	BA3 21115	02/96 →	**CT6FMR**		Copper	0.8	04
	45	BA3 2108	07/91 →	**CW7LPR**		Nickel	0.8	04
	46	BA3 2108	05/90 →	**CW7LPR**		Nickel	0.8	04
	48	BA3 2108	05/89 → 07/97	**CW7LPR**		Nickel	0.8	04
	50	BA3 21115	02/96 →	**CW7LPR**		Nickel	0.8	04
1500	50	BA3 21083	07/91 →	**CT6FMR**		Copper	0.8	04
	52	BA3 2111	11/94 →	**CT6FMR**		Copper	0.8	04
	53	BA3 21083	09/91 →	**CT6FMR**		Copper	0.8	04
	50	BA3 21083	07/91 →	**CW7LPR**		Nickel	0.8	04
	52	BA3 2111	11/94 →	**CW7LPR**		Nickel	0.8	04
	53	BA3 21083	09/91 →	**CW7LPR**		Nickel	0.8	04
1.5	57	VAZ-2111	02/92 → 08/94	**CT6FMR**		Copper	0.8	04
	59	VAZ-2111	08/03 → 12/07	**CT6FMR**		Copper	0.8	04
	57	VAZ-2111	01/00 →	**CW7LPR**		Nickel	0.8	04
	59	VAZ-2111	08/03 →	**CW7LPR**		Nickel	0.8	04
SAMARA								
1100	39	BA3 21081	02/88 → 12/94	**CW7LPR**		Nickel	0.8	04
	43	BA3 21081	02/96 →	**CW7LPR**		Nickel	0.8	04
	39	BA3 21081	02/88 → 12/94	**CT6FMR**		Copper	0.8	04
	43	BA3 21081	02/96 →	**CT6FMR**		Copper	0.8	04
1300	45	BA3 2108	09/91 →	**CW7LPR**		Nickel	0.8	04
	46	BA3 2108	01/88 →	**CW7LPR**		Nickel	0.8	04
	50	BA3 21115	02/96 →	**CW7LPR**		Nickel	0.8	04
	45	BA3 2108	09/91 →	**CT6FMR**		Copper	0.8	04
	46	BA3 2108	01/88 →	**CT6FMR**		Copper	0.8	04
	50	BA3 21115	02/96 →	**CT6FMR**		Copper	0.8	04

	kW					CORE		QTY
LADA								
SAMARA								
1500	50	BA3 21083	09/91 →	**CW7LPR**	06/95 → 07/03	Nickel	0.8	04
	52	BA3 2111	02/95 →	**CW7LPR**	→ 07/03	Nickel	0.8	04
	53	BA3 21083	01/88 →	**CW7LPR**		Nickel	0.8	04
	50	BA3 21083	09/91 →	**CT6FMR**	06/95 → 07/03	Copper	0.8	04
	52	BA3 2111	02/95 →	**CT6FMR**	→ 07/03	Copper	0.8	04
	53	BA3 21083	01/88 →	**CT6FMR**		Copper	0.8	04
1.5	57	VAZ-2111	04/96 →	**CW7LPR**		Nickel	0.8	04
	57	VAZ-2111	02/92 → 08/94	**CT6FMR**		Copper	0.8	04
SAMARA FORMA								
1100	39	BA3 21081	07/91 →	**CT6FMR**		Copper	0.8	04
1300	45	BA3 2108	07/91 →	**CT6FMR**		Copper	0.8	04
	46	BA3 2108	05/90 →	**CT6FMR**		Copper	0.8	04
	48	BA3 2108	05/89 → 07/97	**CT6FMR**		Copper	0.8	04
	50	BA3 21115	02/96 →	**CT6FMR**		Copper	0.8	04
1500	50	BA3 21083	07/91 →	**CT6FMR**		Copper	0.8	04
	52	BA3 2111	11/94 →	**CT6FMR**		Copper	0.8	04
	53	BA3 21083	09/91 →	**CT6FMR**		Copper	0.8	04
1.5	57	VAZ-2111	02/92 → 08/94	**CT6FMR**		Copper	0.8	04
	59	VAZ-2111	08/03 → 12/07	**CT6FMR**		Copper	0.8	04
SIGNET								
1500	49	BA3 2103	05/93 → 04/04	**CW7LPR**		Nickel	0.8	04
	49	BA3 2103	05/93 → 04/05	**CT6FMR**		Copper	0.8	04
1500 S (WAS21093)	52	BA3 21083	06/89 →	**CT6FMR**		Copper	0.8	04
	52	BA3 21083	06/89 →	**CW7LPR**		Nickel	0.8	04
1600 (WAS21074)	56	BA3 2106	01/88 → 10/01	**CW7LPR**		Nickel	0.8	04
	56	BA3 2106	01/88 → 10/01	**CT6FMR**		Copper	0.8	04
1.6 (WAS21074)	56	BA3 2106	01/88 → 10/01	**CW7LPR**		Nickel	0.8	04
	56	BA3 2106	01/88 → 10/01	**CT6FMR**		Copper	0.8	04
1700 i Classic (VAZ2107)	62	B032123	06/96 →	**CW7LPR**		Nickel	0.8	04
	62	B032123	06/96 →	**CT6FMR**		Copper	0.8	04
TAIGA II								
1.7	61	BA3 21214	08/04 →	**CT6FMR**		Copper	0.8	04
VEGA								
1.5	52	BA3 2111	02/92 → 08/94	**CT6FMR**		Copper	0.8	04
	54	BA3 2111	01/95 →	**CT6FMR**	→ 01/07	Copper	0.8	04
	56	VAZ-2111	10/00 →	**CT6FMR**	→ 01/09	Copper	0.8	04
	57	VAZ-2111	01/95 →	**CT6FMR**	→ 01/09	Copper	0.8	04
	52	BA3 2111	06/96 → 09/04	**CW7LPR**		Nickel	0.8	04
	54	BA3 2111	01/95 →	**CW7LPR**	→ 01/07	Nickel	0.8	04
	56	VAZ-2111	10/00 →	**CW7LPR**	→ 01/09	Nickel	0.8	04
	57	VAZ-2111	01/95 →	**CW7LPR**	→ 01/09	Nickel	0.8	04
1.6	60	VAZ-21114	01/00 →	**CT6FMR**	→ 10/08	Copper	0.8	04
	72	VAZ-21114	01/95 →	**CW7LPR**		Nickel	0.8	04
2.0 i	110	C 20 XE	08/96 →	**CT6KMR**		Copper	0.8	04
	110	C 20 XE	08/96 →	**7LPR**		Nickel	0.8	04

	kW					CORE		QTY
LANCIA								
DEDRA (835_)								
1.6 16V (835EI)	76	182 A4.000	01/96 → 07/99	**CT5KMMR**		Copper	0.8	04
1.6 i.e. (835AB)	57	835 A1.046	08/89 → 03/93	**CW7LPR**		Nickel	0.8	04
	57	835 A1.046	08/89 → 03/93	**CT6FMR**		Copper	0.8	04
1.8 i.e. (835AC, 835BC)	80	835 A2.000	09/89 → 06/94	**CW7LPR**		Nickel	0.8	04
	80	835 A2.000	09/89 → 06/94	**CT6FMR**		Copper	0.8	04
1.8 i.e. (835BD, 835AD)	77	835 A2.046	09/89 → 07/99	**CW7LPR**		Nickel	0.8	04
	77	835 A2.046	09/89 → 07/99	**CT6FMR**		Copper	0.8	04
2.0 i.e. (835AI)	86	835 A5.000	09/89 → 07/92	**CW7LPR**		Nickel	0.8	04
	86	835 A5.000	09/89 → 07/92	**CT6FMR**		Copper	0.8	04
2.0 i.e. (835AL)	83	835 A5.046	09/89 → 07/99	**CW7LPR**		Nickel	0.8	04
	83	835 A5.046	09/89 → 07/99	**CT6FMR**		Copper	0.8	04
DELTA (831_)								
1.6 GT i.e. (831AB.010)	66	149 C2.000	05/87 → 08/92	**CW7LPR**		Nickel	0.8	04
	66	149 C2.000	05/87 → 08/92	**CT6FMR**		Copper	0.8	04
1.6 HF Turbo (831AB.020S)	97	831 B7.046	04/87 → 03/89	**CJT6FMR**		Copper	0.8	04
2.0 16V HF Evo Integrale (831AB.027)	155	831 E5.046	06/93 → 01/94	**CJT6FMR**		Copper	0.8	04
	155	831 E5.000	06/93 → 01/94	**CJT6FMR**		Copper	0.8	04
DELTA I (831_)								
1.6 GT i.e. (831AB.010)	66	149 C2.000	05/87 → 08/92	**CT6FMR**		Copper	0.8	04
1.6 HF Turbo (831AB.020S)	97	831 B7.046	04/87 → 03/89	**CJT6FMR**		Copper	0.8	04
2.0 16V HF Evo Integrale (831AB.027)	155	831 E5.046	06/93 → 01/94	**CJT6FMR**		Copper	0.8	04
	155	831 E5.000	06/93 → 01/94	**CJT6FMR**		Copper	0.8	04
DELTA II (836_)								
1.4 i.e. (836AF, 836AH)	51	836 A4.000	10/94 → 08/99	**CW7LPR**		Nickel	0.8	04
	51	160 A1.046	10/94 → 08/99	**CW7LPR**		Nickel	0.8	04
	51	836 A4.000	10/94 → 08/99	**CT6FMR**		Copper	0.8	04
	51	160 A1.046	10/94 → 08/99	**CT6FMR**		Copper	0.8	04
1.8 i.e. (836AG, 836AL)	66	835 C4.000	07/94 → 08/99	**CW7LPR**		Nickel	0.8	04
	66	836 A6.000	07/94 → 08/99	**CW7LPR**		Nickel	0.8	04
	66	836 C4.000	07/94 → 08/99	**CW7LPR**		Nickel	0.8	04
	66	835 C4.000	07/94 → 08/99	**CT6FMR**		Copper	0.8	04
	66	836 A6.000	07/94 → 08/99	**CT6FMR**		Copper	0.8	04
	66	836 C4.000	07/94 → 08/99	**CT6FMR**		Copper	0.8	04
KAPPA (838_)								
2.0 16V Turbo (838AB1AA)	151	838 A4.000	02/95 → 10/01	**CJT6FMR**		Copper	0.8	04

	kW					CORE		QTY
LANCIA								
LYBRA (839_)								
1.6	76	182 B6.000	10/00 → 10/05	**CT5KMMR**		Copper	0.8	04
1.6 16V (839AXA1A)	76	182 A4.000	07/99 → 10/05	**CT5KMMR**		Copper	0.8	04
MUSA (350_)								
1.4	57	350 A1.000	09/05 →	**CT7DKMR**		Copper	0.8	04
	66	192 B2.000	10/07 →	**CT7DKMR**		Copper	0.8	04
	70	843 A 1.000	10/04 →	**CT7DKMR**		Copper	0.8	04
PHEDRA (179_)								
2.0 (179AXA11)	100	RFN (EW10J4)	09/02 → 11/10	**CT6KHMR11**		Copper	1.1	04
THEMA (834_)								
2000 16V (834FA)	112	834 F1.000	08/92 → 12/93	**CW7LPR**		Nickel	0.8	04
	112	834 F1.000	08/92 → 12/93	**CT6FMR**		Copper	0.8	04
2000 i.e. 16V (834AA)	108	834 B2.000	05/88 → 08/92	**CW7LPR**		Nickel	0.8	04
	108	834 B2.000	05/88 → 08/92	**CT6FMR**		Copper	0.8	04
2000 i.e. 16V (834AI)	104	834 B2.246	02/89 → 05/92	**CW7LPR**		Nickel	0.8	04
	104	834 B2.246	02/89 → 05/92	**CT6FMR**		Copper	0.8	04
3000 V6 (834GD, 834FD)	126	834 F.000	08/92 → 07/94	**CW7LPR**		Nickel	0.8	06
	126	834 F.000	08/92 → 07/94	**CT6FMR**		Copper	0.8	06
THESIS (841_)								
2.0 Turbo (841AXA1B03)	136	841 E.000	07/02 → 07/09	**YJT6KMR**		Copper	1.0	05
Y (840_)								
1.1 (840AE)	40	176 B2.000	11/95 → 09/03	**7LPR**	04/97 →	Nickel	0.8	04
	40	176 B2.000	11/95 → 09/03	**CT6KMR**	04/97 →	Copper	0.8	04
1.2 (840AA, 840AF1A)	44	188 A4.000	03/96 → 09/03	**CT5KMMR**	09/00 →	Copper	0.8	04
	44	840 A3.000	03/96 → 09/03	**CT5KMMR**	09/00 →	Copper	0.8	04
	44	840 A3.000	03/96 → 09/03	**CT6KMMR**	09/00 →	Copper	0.8	04
	44	188 A4.000	03/96 → 09/03	**CT6KMMR**	09/00 →	Copper	0.8	04
1.2 16V (840AD)	63	176 B9.000	04/97 → 09/03	**CT8DKMR**	→ 07/00	Copper	0.8	04
1.2 16V (840AG1A)	59	188 A5.000	10/00 → 09/03	**CT8DKMR**		Copper	0.8	04
Y10 (156_)								
1.0 Fire Catalytic-Conv (156AE)	33	156 A2.246	10/87 → 02/92	**CT6KMMR**	→ 06/89	Copper	0.8	04
1.0 Fire Trazione integrale	37	156 A2.000	12/87 → 02/90	**CT6KMMR**		Copper	0.8	04
1.0 Fire Trazione integrale (156AE)	33	156 A2.246	12/87 → 02/92	**CT6KMMR**		Copper	0.8	04
	33	156 A2.000	12/87 → 02/92	**CT6KMMR**		Copper	0.8	04
1.1 Fire (156AG)	40	176 B2.000	01/95 → 12/95	**CT6KMMR**		Copper	0.8	04
1.1 Fire Trazione integrale (156AG)	40	176 B2.000	01/95 → 12/95	**CT5KMMR**		Copper	0.8	04
1.1 i.e Fire (156AC)	42	156 C.000	08/89 → 06/92	**CT6KMMR**		Copper	0.8	04
1.1 i.e Fire Trazione integrale (156AC)	42	156 C.000	08/89 → 06/92	**CT6KMMR**		Copper	0.8	04

	kW					CORE		QTY
LANCIA								
Y10 (156_)								
1.1 i.e. Fire (156AG)	37	156 C.046	07/89 → 09/95	**CT6KMMR**		Copper	0.8	04
1.1 i.e. Fire Trazione integrale (156AG)	37	156 C.046	09/92 → 12/95	**CT6KMMR**		Copper	0.8	04
1.3 i.e. (156AB)	56	156 B.000	11/87 → 05/93	**CW7LPR**		Nickel	0.8	04
	56	156 B.000	11/87 → 05/93	**CT6FMR**		Copper	0.8	04
1.3 i.e. (156AF)	53	156 B.000	02/89 → 12/95	**CW7LPR**		Nickel	0.8	04
	53	146 A 5.046	02/89 → 12/95	**CT6FMR**		Copper	0.8	04
YPSILON (312_)								
1.2	51	169 A4.000	05/11 →	**CT7DKMR**		Copper	0.8	04
1.2 Bifuel	49	169 A4.000	05/11 →	**CT7DKMR**		Copper	0.8	04
YPSILON (843_)								
1.2	44	188 A4.000	10/03 → 12/11	**CT5KMMR**	→ 09/04	Copper	0.8	04
	44	188 A4.000	10/03 → 12/11	**CT7DKMR**	→ 09/04	Copper	0.8	04
	51	169 A4.000	08/10 → 12/11	**CT7DKMR**		Copper	0.8	04
	59	188 A5.000	10/03 → 12/11	**CT5KMMR**		Copper	0.8	04
1.4	57	350 A1.000	02/06 → 12/11	**CT7DKMR**		Copper	0.8	04
1.4 16V	70	843 A 1.000	10/03 → 12/11	**CT7DKMR**		Copper	0.8	04
ZETA (22_)								
2.0 16V (220AL5)	97	RFV (XU10J4R)	05/98 → 07/00	**7LPR**		Nickel	0.8	04
	97	RFV (XU10J4R)	05/98 → 07/00	**CT6KMR**		Copper	0.8	04
2.0 16V (220AQ5)	100	RFN	07/00 → 09/02	**CT6KHMR11**		Copper	1.1	04
2.0 Turbo (220AD5, 220CD5)	108	RGX (XU10J2TE)	05/95 → 09/02	**D6KMR**		Copper	0.9	04
LAND ROVER								
DEFENDER								
3.5 4x4	86	11 D	09/90 → 08/93	**CT5FMR**		Copper	0.8	08
DISCOVERY								
2.0 16 V 4x4	99	20 T4H	06/89 → 10/98	**CT6KMR**		Copper	0.8	04
	99	20 T4H	06/89 → 10/98	**7LPR**		Nickel	0.8	04
3.5 4x4	98	15G	06/89 → 08/90	**CT6FMR**		Copper	0.8	08
	122	22 D	06/89 → 06/94	**CW7LPR**		Nickel	0.8	08
3.5 4x4 (SALLJG)	113	22 D	06/89 → 06/94	**CT6FMR**		Copper	0.8	08
	113	22 D	06/89 → 06/94	**CW7LPR**		Nickel	0.8	08
4.0 4x4	134	35 D	09/93 → 10/98	**CT6FMR**		Copper	0.8	08
	134	36 D	09/93 → 10/98	**CW7LPR**		Nickel	0.8	08
RANGE ROVER								
3.5 4x4	107	31 D	01/87 → 09/90	**CW7LPR**		Nickel	0.8	08
	107	31 D	01/87 → 09/90	**CT6FMR**		Copper	0.8	08
RANGE ROVER III								
4.4 4x4	210	M62 B44	03/02 → 08/12	**D6KMR**		Copper	0.9	08

	kW					CORE		QTY
MASERATI								
425								
2.24V	180	475	03/89 → 12/94	**CT8DKMR**		Copper	0.8	06
BITURBO								
2.24V	180	475	03/89 → 12/94	**CT8DKMR**		Copper	0.8	06
MAZDA								
2								
1.4	59	FXJA	04/03 →	**CT5QHMR**		Copper	1.0	04
	59	FXJA	02/03 →	**CT5QHMR**		Copper	1.0	04
3								
1.4	59	FXJA	02/04 → 06/09	**CT5QHMR**		Copper	1.0	04
	62	ZJ-VE	10/03 → 06/09	**CT5KMMR11**	03/06 →	Copper	1.1	04
1.6	77	B6ZE	10/03 → 06/09	**CT5KMMR11**	→ 02/06	Copper	1.1	04
1.6 MZR	77	Z6	06/09 →	**CT5KMMR11**	11/11 →	Copper	1.1	04
6								
2.0 MZR	108	LF17	08/07 →	**CT5QHMR**	→ 10/09	Copper	1.0	04
	114	LF-DE	01/10 →	**CT5QHMR**	02/12 →	Copper	1.0	04
2.3	120	L3C1	03/05 → 07/07	**CT5QHMR**		Copper	1.0	04
	122	L3C1	06/02 → 08/07	**CT5QHMR**	→ 04/04	Copper	1.0	04
2.5 MZR	125	L5-VE	08/07 →	**CT5QHMR**		Copper	1.0	04
30X								
1.6 i	65	B69	07/91 →	**CT5KMMR11**	→ 10/93	Copper	1.1	04
	79	B6D	01/94 →	**CT5KMMR11**		Copper	1.1	04
1.8 i V6	98	K819	01/92 → 01/94	**CT5KMMR11**		Copper	1.1	06
121								
1.3	40	B3	04/89 → 10/90	**CT5FMR**		Copper	0.8	04
	44	B3	10/87 → 11/90	**CT5FMR**		Copper	0.8	04
121 II								
1.1	40	B1	11/90 → 10/93	**CT5FMR**		Copper	0.8	04
1.3 16V	39	B3 (16V)	11/90 → 03/96	**CT5FMR**		Copper	0.8	04
1.3 i 16V	53	B3 (16V)	11/90 → 03/96	**CT5KMMR11**		Copper	1.1	04
121 METRO								
1.3 16V	46	B3 ME	08/98 →	**CT5KMMR11**	→ 07/07	Copper	1.1	04
1.3 i 16V	53	B3 (16V)	08/98 → 04/00	**CT5KMMR11**		Copper	1.1	04
1.5 16V	55	B5 E	04/00 → 07/03	**CT5KMMR11**		Copper	1.1	04
323 ASTINA IV								
1.6	62	B6E	09/89 → 06/91	**CT6KMR11**		Copper	1.1	04
1.6 16V	65	B6	03/91 → 10/94	**CT5KMMR**		Copper	0.8	04
1.8 16V	76	BP	08/89 → 07/94	**CT6KMR11**		Copper	1.1	04
	103	BP31	09/89 → 03/93	**CT6KMR**		Copper	0.8	04
1.8 16V GT	94	BP (DOHC)	08/89 → 07/94	**CT6KMR11**		Copper	1.1	04
1.8 4WD	76	BPC	01/91 → 04/94	**CT6KMR11**		Copper	1.1	04

	kW					CORE		QTY
MAZDA								
323 ASTINA V								
1.3 16V	54	B3 (16V)	08/94 → 09/98	**CT5KMMR11**		Copper	1.1	04
1.5 16V	65	Z5-DE	07/94 → 09/98	**CT5KMMR11**		Copper	1.1	04
1.8 16V	84	BP-ZE	08/94 → 09/98	**CT5KMMR11**		Copper	1.1	04
2.0 24V	106	KF	08/94 → 09/98	**CT6KMR11**		Copper	1.1	06
323 ASTINA VI								
1.4	53	B3 (16V)	01/01 → 05/04	**CT5KMMR11**		Copper	1.1	04
1.4 16V	54	B3 ME	09/98 → 01/01	**CT5KMMR11**		Copper	1.1	04
1.5 16V	65	ZL05	09/98 → 01/01	**CT5KMMR11**		Copper	1.1	04
	65	ZL06	09/98 → 01/01	**CT5KMMR11**		Copper	1.1	04
1.8 Astina	92	BP (DOHC)	09/98 → 05/04	**CT5KMMR11**		Copper	1.1	04
1.9 16V	84	FP	09/98 → 01/01	**CT5KMMR11**		Copper	1.1	04
	84	FP55	09/98 → 01/01	**CT5KMMR11**		Copper	1.1	04
323 C IV								
1.3	49	B3E	09/89 → 07/94	**CT5FMR**		Copper	0.8	04
1.3 16V	54	B3 (16V)	09/89 → 07/94	**CT5KMMR11**		Copper	1.1	04
1.6	62	B6E	09/89 → 06/91	**CT5KMMR**		Copper	0.8	04
1.8 16V	103	BP31	09/89 → 03/93	**CT6KMR**		Copper	0.8	04
	103	BP22	09/89 → 03/93	**7LPR**		Nickel	0.8	04
1.8 16V 4WD	76	BP	11/91 → 12/93	**CT6KMR11**		Copper	1.1	04
1.8 16V GT	94	BP (DOHC)	09/89 → 03/93	**CT5KMMR11**		Copper	1.1	04
323 C V								
1.3 16V	54	B3 (16V)	08/94 → 09/98	**CT5KMMR11**		Copper	1.1	04
1.5 16V	65	Z5-DE	08/94 → 09/98	**CT5KMMR11**		Copper	1.1	04
1.8 16V	84	BP-ZE	08/94 → 09/98	**CT5KMMR11**		Copper	1.1	04
323 F IV								
1.6	62	B6E	09/89 → 06/91	**CT6KMR11**		Copper	1.1	04
1.6 16V	65	B6	03/91 → 10/94	**CT5KMMR**		Copper	0.8	04
1.8 16V	76	BP	08/89 → 07/94	**CT6KMR11**		Copper	1.1	04
	103	BP31	09/89 → 03/93	**CT6KMR**		Copper	0.8	04
1.8 16V GT	94	BP (DOHC)	08/89 → 07/94	**CT6KMR11**		Copper	1.1	04
1.8 4WD	76	BPC	01/91 → 04/94	**CT6KMR11**		Copper	1.1	04
323 F V								
1.5 16V	65	Z5-DE	07/94 → 09/98	**CT5KMMR11**		Copper	1.1	04
1.8 16V	84	BP-ZE	08/94 → 09/98	**CT5KMMR11**		Copper	1.1	04
2.0 24V	106	KF	08/94 → 09/98	**CT6KMR11**		Copper	1.1	06
323 F VI								
1.4	53	B3 (16V)	01/01 → 05/04	**CT5KMMR11**		Copper	1.1	04
1.4 16V	54	B3 ME	09/98 → 01/01	**CT5KMMR11**		Copper	1.1	04
1.5 16V	65	ZL05	09/98 → 01/01	**CT5KMMR11**		Copper	1.1	04
	65	ZL06	09/98 → 01/01	**CT5KMMR11**		Copper	1.1	04
1.8 Astina	92	BP (DOHC)	09/98 → 05/04	**CT5KMMR11**		Copper	1.1	04
1.9 16V	84	FP	09/98 → 01/01	**CT5KMMR11**		Copper	1.1	04
	84	FP55	09/98 → 01/01	**CT5KMMR11**		Copper	1.1	04

	kW					CORE		QTY
MAZDA								
323 III								
1.4	44	B3	04/87 → 07/89	**CT6FMR**		Copper	0.8	04
	44	B3	04/87 → 07/89	**CW7LPR**		Nickel	0.8	04
323 IV								
1.3	49	B3E	09/89 → 06/91	**CT5FMR**		Copper	0.8	04
	49	B383	09/89 → 06/91	**CT5FMR**		Copper	0.8	04
1.3 16V	54	B3 (16V)	04/91 → 07/94	**CT5KMMR11**		Copper	1.1	04
1.8 16V GT	94	BP (DOHC)	06/89 → 07/94	**CT6KMR11**		Copper	1.1	04
323 P V								
1.3 16V	54	B3 (16V)	10/96 →	**CT6KMR11**		Copper	1.1	04
1.5 16V	65	Z5-DE	10/96 →	**CT6KMR11**	→ 07/01	Copper	1.1	04
323 PROTÉGÉ V								
1.3 16V	54	B3 (16V)	08/94 → 09/98	**CT5KMMR11**		Copper	1.1	04
1.5 16V	65	Z5-DE	08/94 → 09/98	**CT5KMMR11**		Copper	1.1	04
1.6	80	B6 (DOHC)	08/94 → 09/98	**CT5KMMR11**		Copper	1.1	04
	80	B6 (DOHC)	08/94 → 09/98	**CT6KMR11**		Copper	1.1	04
1.6 Protégé	80	B6 (DOHC)	08/94 → 09/98	**CT5KMMR11**		Copper	1.1	04
	80	B6 (DOHC)	08/94 → 09/98	**CT6KMR11**		Copper	1.1	04
1.8	92	BP (DOHC)	07/94 → 09/98	**CT5KMMR11**		Copper	1.1	04
	92	BP (DOHC)	07/94 → 09/98	**CT6KMR11**		Copper	1.1	04
1.8 16V	84	BP-ZE	08/94 → 09/98	**CT5KMMR11**		Copper	1.1	04
1.8 Protégé	92	BP (DOHC)	07/94 → 09/98	**CT5KMMR11**		Copper	1.1	04
	92	BP (DOHC)	07/94 → 09/98	**CT6KMR11**		Copper	1.1	04
323 PROTÉGÉ VI								
1.4	53	B3 (16V)	01/01 → 05/04	**CT5KMMR11**		Copper	1.1	04
1.4 16V	54	B3 ME	09/98 → 01/01	**CT5KMMR11**		Copper	1.1	04
1.5 16V	65	ZL06	09/98 → 01/01	**CT5KMMR11**		Copper	1.1	04
	65	ZL05	09/98 → 01/01	**CT5KMMR11**		Copper	1.1	04
1.8 Protégé	92	BP (DOHC)	05/98 → 05/04	**CT5KMMR11**		Copper	1.1	04
	92	BP (DOHC)	05/98 → 05/04	**CT6KMR11**		Copper	1.1	04
1.9 16V	84	FP55	09/98 → 05/04	**CT5KMMR11**		Copper	1.1	04
	84	FP	09/98 → 05/04	**CT5KMMR11**		Copper	1.1	04
323 S IV								
1.3	49	B383	09/89 → 06/91	**CT5FMR**		Copper	0.8	04
	49	B3E	09/89 → 06/91	**CT5FMR**		Copper	0.8	04
1.3 16V	54	B3 (16V)	04/91 → 07/94	**CT5KMMR11**		Copper	1.1	04
1.8 16V GT	94	BP (DOHC)	06/89 → 07/94	**CT6KMR11**		Copper	1.1	04
323 S V								
1.3 16V	54	B3 (16V)	08/94 → 09/98	**CT5KMMR11**		Copper	1.1	04
1.5 16V	65	Z5-DE	08/94 → 09/98	**CT5KMMR11**		Copper	1.1	04
1.6	80	B6 (DOHC)	08/94 → 09/98	**CT5KMMR11**		Copper	1.1	04
	80	B6 (DOHC)	08/94 → 09/98	**CT6KMR11**		Copper	1.1	04
1.6 Protégé	80	B6 (DOHC)	08/94 → 09/98	**CT5KMMR11**		Copper	1.1	04
	80	B6 (DOHC)	08/94 → 09/98	**CT6KMR11**		Copper	1.1	04

	kW					CORE		QTY
MAZDA								
323 S V								
1.8	92	BP (DOHC)	07/94 → 09/98	**CT5KMMR11**		Copper	1.1	04
	92	BP (DOHC)	07/94 → 09/98	**CT6KMR11**		Copper	1.1	04
1.8 16V	84	BP-ZE	08/94 → 09/98	**CT5KMMR11**		Copper	1.1	04
1.8 Protégé	92	BP (DOHC)	07/94 → 09/98	**CT5KMMR11**		Copper	1.1	04
	92	BP (DOHC)	07/94 → 09/98	**CT6KMR11**		Copper	1.1	04
323 S VI								
1.4	53	B3 (16V)	01/01 → 05/04	**CT5KMMR11**		Copper	1.1	04
1.4 16V	54	B3 ME	09/98 → 01/01	**CT5KMMR11**		Copper	1.1	04
	54	B3 ME	09/98 → 01/01	**CT5KMMR11**		Copper	1.1	04
1.5 16V	65	ZL06	09/98 → 01/01	**CT5KMMR11**		Copper	1.1	04
	65	ZL05	09/98 → 01/01	**CT5KMMR11**		Copper	1.1	04
1.8 Protégé	92	BP (DOHC)	05/98 → 05/04	**CT5KMMR11**		Copper	1.1	04
	92	BP (DOHC)	05/98 → 05/04	**CT6KMR11**		Copper	1.1	04
1.9 16V	84	FP55	09/98 → 05/04	**CT5KMMR11**		Copper	1.1	04
	84	FP	09/98 → 05/04	**CT5KMMR11**		Copper	1.1	04
626 III								
1.6	60	F6	06/87 → 05/92	**CT5FMR**		Copper	0.8	04
1.8	65	F8 (12V)	11/87 → 05/92	**CT6KMR**		Copper	0.8	04
	65	F8 (12V)	11/87 → 05/92	**7LPR**		Nickel	0.8	04
2.0	66	FE (12V)	09/87 → 10/90	**CT6KMMR**		Copper	0.8	04
2.0 12V	79	FE (12V)	09/87 → 05/92	**CT6KMMR**		Copper	0.8	04
2.2 12V	85	F2	11/87 → 07/91	**CT5FMR**		Copper	0.8	04
626 IV								
1.8 i	77	FP	01/92 → 04/97	**CT5KMMR11**		Copper	1.1	04
	78	FP	05/94 → 06/97	**CT5KMMR11**		Copper	1.1	04
2.0 i	85	FS	01/92 → 04/97	**CT6KMR11**		Copper	1.1	04
2.0 i 4WD	85	FS	04/92 → 04/97	**CT6KMR11**		Copper	1.1	04
929 III								
2.2 12V	85	F21	01/88 → 04/89	**CT6KMMR**		Copper	0.8	04
	85	F2	01/88 → 04/89	**CT6KMMR**		Copper	0.8	04
	85	F2E	01/88 → 04/89	**CT6KMMR**		Copper	0.8	04
ALLEGRO VI								
1.4	53	B3 (16V)	01/01 → 05/04	**CT5KMMR11**		Copper	1.1	04
1.4 16V	54	B3 ME	09/98 → 01/01	**CT5KMMR11**		Copper	1.1	04
	54	B3 ME	09/98 → 01/01	**CT5KMMR11**		Copper	1.1	04
1.5 16V	65	ZL06	09/98 → 01/01	**CT5KMMR11**		Copper	1.1	04
	65	ZL05	09/98 → 01/01	**CT5KMMR11**		Copper	1.1	04
1.8 Protégé	92	BP (DOHC)	05/98 → 05/04	**CT5KMMR11**		Copper	1.1	04
	92	BP (DOHC)	05/98 → 05/04	**CT6KMR11**		Copper	1.1	04
1.9 16V	84	FP55	09/98 → 05/04	**CT5KMMR11**		Copper	1.1	04
	84	FP	09/98 → 05/04	**CT5KMMR11**		Copper	1.1	04

	kW					CORE		QTY
MAZDA								
ASTINA IV								
1.6	62	B6E	09/89 → 06/91	**CT6KMR11**		Copper	1.1	04
1.6 16V	65	B6	03/91 → 10/94	**CT5KMMR**		Copper	0.8	04
1.8 16V	76	BP	08/89 → 07/94	**CT6KMR11**		Copper	1.1	04
	103	BP31	09/89 → 03/93	**CT6KMR**		Copper	0.8	04
1.8 16V GT	94	BP (DOHC)	08/89 → 07/94	**CT6KMR11**		Copper	1.1	04
1.8 4WD	76	BPC	01/91 → 04/94	**CT6KMR11**		Copper	1.1	04
ATENZA								
2.3	120	L3C1	03/05 → 07/07	**CT5QHMR**		Copper	1.0	04
	122	L3C1	06/02 → 08/07	**CT5QHMR**	→ 04/04	Copper	1.0	04
AXELA								
1.4	59	FXJA	02/04 → 06/09	**CT5QHMR**		Copper	1.0	04
	62	ZJ-VE	10/03 → 06/09	**CT5KMMR11**	03/06 →	Copper	1.1	04
1.6	77	B6ZE	10/03 → 06/09	**CT5KMMR11**	→ 02/06	Copper	1.1	04
1.6 MZR	77	Z6	06/09 →	**CT5KMMR11**	11/11 →	Copper	1.1	04
BONGO								
E2000	60	FE (8V)	03/91 → 05/94	**CT6KMMR**		Copper	0.8	04
	60	FE61	03/91 → 05/94	**CT6KMMR**		Copper	0.8	04
	60	FE60	03/91 → 05/94	**CT6KMMR**		Copper	0.8	04
	70	FE (8V)	06/94 → 05/03	**CT6KMMR**		Copper	0.8	04
	71	FE (8V)	04/04 → 07/06	**CT6KMMR**		Copper	0.8	04
B-SERIE								
2.6 4WD	73	4G54	01/87 → 10/90	**CT5FMR**		Copper	0.8	04
DEMIO								
1.3 16V	46	B3 ME	08/98 →	**CT5KMMR11**	→ 07/07	Copper	1.1	04
1.3 i 16V	53	B3 (16V)	08/98 → 04/00	**CT5KMMR11**		Copper	1.1	04
1.4	59	FXJA	04/03 →	**CT5QHMR**		Copper	1.0	04
	59	FXJA	02/03 →	**CT5QHMR**		Copper	1.0	04
1.5 16V	55	B5 E	04/00 → 07/03	**CT5KMMR11**		Copper	1.1	04
E-SERIE								
2.0 i (SGE3, SGEW)	74	FE (12V)	08/99 → 10/01	**CT6KMMR**		Copper	0.8	04
E2000	60	FE60	03/91 → 05/94	**CT6KMMR**		Copper	0.8	04
	60	FE (8V)	03/91 → 05/94	**CT6KMMR**		Copper	0.8	04
	60	FE61	03/91 → 05/94	**CT6KMMR**		Copper	0.8	04
	70	FE (8V)	06/94 → 05/03	**CT6KMMR**		Copper	0.8	04
	71	FE (8V)	04/04 → 07/06	**CT6KMMR**		Copper	0.8	04
ETUDE III								
1.4	44	B3	04/87 → 07/89	**CT6FMR**		Copper	0.8	04
	44	B3	04/87 → 07/89	**CW7LPR**		Nickel	0.8	04
ETUDE IV								
1.3	49	B3E	09/89 → 07/94	**CT5FMR**		Copper	0.8	04
1.3 16V	54	B3 (16V)	09/89 → 07/94	**CT5KMMR11**		Copper	1.1	04
1.6	62	B6E	09/89 → 06/91	**CT5KMMR**		Copper	0.8	04
	62	B6E	09/89 → 06/91	**CT6KMR11**		Copper	1.1	04

	kW					CORE		QTY
MAZDA								
ETUDE IV								
1.6 16V	65	B6	03/91 → 10/94	**CT5KMMR**		Copper	0.8	04
1.8 16V	76	BP	08/89 → 07/94	**CT6KMR11**		Copper	1.1	04
	103	BP31	09/89 → 03/93	**7LPR**		Nickel	0.8	04
	103	BP22	09/89 → 03/93	**7LPR**		Nickel	0.8	04
	103	BP31	09/89 → 03/93	**CT6KMR**		Copper	0.8	04
	103	BP22	09/89 → 03/93	**CT6KMR**		Copper	0.8	04
1.8 16V 4WD	76	BP	11/91 → 12/93	**CT6KMR11**		Copper	1.1	04
1.8 16V GT	94	BP (DOHC)	09/89 → 03/93	**CT5KMMR11**		Copper	1.1	04
	94	BP (DOHC)	08/89 → 07/94	**CT6KMR11**		Copper	1.1	04
1.8 4WD	76	BPC	01/91 → 04/94	**CT6KMR11**		Copper	1.1	04
ETUDE V								
1.3 16V	54	B3 (16V)	08/94 → 09/98	**CT5KMMR11**		Copper	1.1	04
1.5 16V	65	Z5-DE	08/94 → 09/98	**CT5KMMR11**		Copper	1.1	04
1.6	80	B6 (DOHC)	08/94 → 09/98	**CT5KMMR11**		Copper	1.1	04
	80	B6 (DOHC)	08/94 → 09/98	**CT6KMR11**		Copper	1.1	04
1.6 Protégé	80	B6 (DOHC)	08/94 → 09/98	**CT5KMMR11**		Copper	1.1	04
	80	B6 (DOHC)	08/94 → 09/98	**CT6KMR11**		Copper	1.1	04
1.8	92	BP (DOHC)	07/94 → 09/98	**CT5KMMR11**		Copper	1.1	04
	92	BP (DOHC)	07/94 → 09/98	**CT6KMR11**		Copper	1.1	04
1.8 16V	84	BP-ZE	08/94 → 09/98	**CT5KMMR11**		Copper	1.1	04
1.8 Protégé	92	BP (DOHC)	07/94 → 09/98	**CT5KMMR11**		Copper	1.1	04
	92	BP (DOHC)	07/94 → 09/98	**CT6KMR11**		Copper	1.1	04
ETUDE VI								
1.4	53	B3 (16V)	01/01 → 05/04	**CT5KMMR11**		Copper	1.1	04
	53	B3 (16V)	01/01 → 05/04	**CT5KMMR11**		Copper	1.1	04
1.4 16V	54	B3 ME	09/98 → 01/01	**CT5KMMR11**		Copper	1.1	04
1.5 16V	65	ZL05	09/98 → 01/01	**CT5KMMR11**		Copper	1.1	04
	65	ZL06	09/98 → 01/01	**CT5KMMR11**		Copper	1.1	04
1.8 Astina	92	BP (DOHC)	09/98 → 05/04	**CT5KMMR11**		Copper	1.1	04
1.8 Protégé	92	BP (DOHC)	05/98 → 05/04	**CT6KMR11**		Copper	1.1	04
1.9 16V	84	FP	09/98 → 01/01	**CT5KMMR11**		Copper	1.1	04
	84	FP55	09/98 → 01/01	**CT5KMMR11**		Copper	1.1	04
FAMILIA / LANTIS V								
1.5 16V	65	Z5-DE	07/94 → 09/98	**CT5KMMR11**		Copper	1.1	04
1.8 16V	84	BP-ZE	08/94 → 09/98	**CT5KMMR11**		Copper	1.1	04
2.0 24V	106	KF	08/94 → 09/98	**CT6KMR11**		Copper	1.1	06
FAMILIA III								
1.4	44	B3	04/87 → 07/89	**CT6FMR**		Copper	0.8	04
	44	B3	04/87 → 07/89	**CW7LPR**		Nickel	0.8	04
FAMILIA IV								
1.3	49	B3E	09/89 → 07/94	**CT5FMR**		Copper	0.8	04
	49	B383	09/89 → 06/91	**CT5FMR**		Copper	0.8	04
1.3 16V	54	B3 (16V)	04/91 → 07/94	**CT5KMMR11**		Copper	1.1	04
	54	B3 (16V)	09/89 → 07/94	**CT5KMMR11**		Copper	1.1	04

	kW					CORE		QTY
MAZDA								
FAMILIA IV								
1.6	62	B6E	09/89 → 06/91	**CT5KMMR**		Copper	0.8	04
	62	B6E	09/89 → 06/91	**CT6KMR11**		Copper	1.1	04
1.6 16V	65	B6	03/91 → 10/94	**CT5KMMR**		Copper	0.8	04
1.8 16V	76	BP	08/89 → 07/94	**CT6KMR11**		Copper	1.1	04
	103	BP22	09/89 → 03/93	**CT6KMR**		Copper	0.8	04
	103	BP31	09/89 → 03/93	**CT6KMR**		Copper	0.8	04
	103	BP22	09/89 → 03/93	**7LPR**		Nickel	0.8	04
	103	BP31	09/89 → 03/93	**7LPR**		Nickel	0.8	04
1.8 16V 4WD	76	BP	11/91 → 12/93	**CT6KMR11**		Copper	1.1	04
1.8 16V GT	94	BP (DOHC)	09/89 → 03/93	**CT5KMMR11**		Copper	1.1	04
	94	BP (DOHC)	08/89 → 07/94	**CT6KMR11**		Copper	1.1	04
1.8 4WD	76	BPC	01/91 → 04/94	**CT6KMR11**		Copper	1.1	04
FAMILIA V								
1.3 16V	54	B3 (16V)	08/94 → 09/98	**CT5KMMR11**		Copper	1.1	04
	54	B3 (16V)	10/96 →	**CT6KMR11**		Copper	1.1	04
1.5 16V	65	Z5-DE	07/94 → 09/98	**CT5KMMR11**		Copper	1.1	04
	65	Z5-DE	10/96 →	**CT6KMR11**	→ 07/01	Copper	1.1	04
1.6	80	B6 (DOHC)	08/94 → 09/98	**CT5KMMR11**		Copper	1.1	04
	80	B6 (DOHC)	08/94 → 09/98	**CT6KMR11**		Copper	1.1	04
1.6 Protégé	80	B6 (DOHC)	08/94 → 09/98	**CT5KMMR11**		Copper	1.1	04
	80	B6 (DOHC)	08/94 → 09/98	**CT6KMR11**		Copper	1.1	04
1.8	92	BP (DOHC)	07/94 → 09/98	**CT5KMMR11**		Copper	1.1	04
	92	BP (DOHC)	07/94 → 09/98	**CT6KMR11**		Copper	1.1	04
1.8 16V	84	BP-ZE	08/94 → 09/98	**CT5KMMR11**		Copper	1.1	04
1.8 Protégé	92	BP (DOHC)	07/94 → 09/98	**CT5KMMR11**		Copper	1.1	04
	92	BP (DOHC)	07/94 → 09/98	**CT6KMR11**		Copper	1.1	04
2.0 24V	106	KF	08/94 → 09/98	**CT6KMR11**		Copper	1.1	06
FAMILIA VI								
1.4	53	B3 (16V)	01/01 → 05/04	**CT5KMMR11**		Copper	1.1	04
1.4 16V	54	B3 ME	09/98 → 01/01	**CT5KMMR11**		Copper	1.1	04
1.5 16V	65	ZL05	09/98 → 01/01	**CT5KMMR11**		Copper	1.1	04
	65	ZL06	09/98 → 01/01	**CT5KMMR11**		Copper	1.1	04
1.8 Astina	92	BP (DOHC)	09/98 → 05/04	**CT5KMMR11**		Copper	1.1	04
	92	BP (DOHC)	09/98 → 05/04	**CT6KMR11**		Copper	1.1	04
1.8 Protégé	92	BP (DOHC)	05/98 → 05/04	**CT5KMMR11**		Copper	1.1	04
	92	BP (DOHC)	05/98 → 05/04	**CT6KMR11**		Copper	1.1	04
1.9 16V	84	FP	09/98 → 05/04	**CT5KMMR11**		Copper	1.1	04
	84	FP55	09/98 → 05/04	**CT5KMMR11**		Copper	1.1	04
LANTIS V								
1.5 16V	65	Z5-DE	07/94 → 09/98	**CT5KMMR11**		Copper	1.1	04
1.8 16V	84	BP-ZE	08/94 → 09/98	**CT5KMMR11**		Copper	1.1	04
2.0 24V	106	KF	08/94 → 09/98	**CT6KMR11**		Copper	1.1	06

	kW					CORE		QTY
MAZDA								
LUCE III								
2.2 12V	85	F2E	01/88 → 04/89	**CT6KMMR**		Copper	0.8	04
	85	F21	01/88 → 04/89	**CT6KMMR**		Copper	0.8	04
	85	F2	01/88 → 04/89	**CT6KMMR**		Copper	0.8	04
MIATA I								
1.6	66	8AN1	01/95 → 04/98	**CT6KMR11**		Copper	1.1	04
	85	B64F	05/90 → 01/94	**CT6KMR11**		Copper	1.1	04
MIATA II								
1.6 16V	81	B6D	05/98 → 10/05	**CT5KMMR11**		Copper	1.1	04
1.8	103	BPD	01/98 → 07/02	**CT6KMR11**		Copper	1.1	04
	107	BP6J	08/02 → 10/05	**CT6KMR11**		Copper	1.1	04
1.8 16V	102	BPD	11/00 → 10/05	**CT6KMR11**		Copper	1.1	04
	103	BP-ZE	05/98 → 10/05	**CT6KMR11**		Copper	1.1	04
	107	BPD	11/00 → 10/05	**CT6KMR11**		Copper	1.1	04
	107	BP-ZE	11/00 → 10/05	**CT6KMR11**		Copper	1.1	04
MILLENIA								
2.0 24V	105	KF	08/93 → 01/00	**CT5KMMR11**		Copper	1.1	06
MX-3								
1.6 i	65	B69	07/91 →	**CT5KMMR11**	→ 10/93	Copper	1.1	04
	79	B6D	01/94 →	**CT5KMMR11**		Copper	1.1	04
1.8 i V6	98	K819	01/92 → 01/94	**CT5KMMR11**		Copper	1.1	06
MX-5 I								
1.6	66	8AN1	01/95 → 04/98	**CT6KMR11**		Copper	1.1	04
	85	B64F	05/90 → 01/94	**CT6KMR11**		Copper	1.1	04
MX-5 II								
1.6 16V	81	B6D	05/98 → 10/05	**CT5KMMR11**		Copper	1.1	04
1.8	103	BPD	01/98 → 07/02	**CT6KMR11**		Copper	1.1	04
	107	BP6J	08/02 → 10/05	**CT6KMR11**		Copper	1.1	04
1.8 16V	102	BPD	11/00 → 10/05	**CT6KMR11**		Copper	1.1	04
	103	BP-ZE	05/98 → 10/05	**CT6KMR11**		Copper	1.1	04
	107	BPD	11/00 → 10/05	**CT6KMR11**		Copper	1.1	04
	107	BP-ZE	11/00 → 10/05	**CT6KMR11**		Copper	1.1	04
MX-6								
2.0	85	FS	02/92 → 02/97	**CT5KMMR11**		Copper	1.1	04
PREMACY								
1.9	74	FP	07/99 → 03/05	**CT5KMMR11**	→ 06/01	Copper	1.1	04
	84	FP	07/99 → 03/05	**CT5KMMR11**	→ 06/01	Copper	1.1	04
PROTÉGÉ IV								
1.3	49	B383	09/89 → 06/91	**CT5FMR**		Copper	0.8	04
	49	B3E	09/89 → 06/91	**CT5FMR**		Copper	0.8	04
1.3 16V	54	B3 (16V)	04/91 → 07/94	**CT5KMMR11**		Copper	1.1	04
1.8 16V GT	94	BP (DOHC)	06/89 → 07/94	**CT6KMR11**		Copper	1.1	04

	kW					CORE		QTY
MAZDA								
PROTÉGÉ V								
1.3 16V	54	B3 (16V)	08/94 → 09/98	**CT5KMMR11**		Copper	1.1	04
1.5 16V	65	Z5-DE	08/94 → 09/98	**CT5KMMR11**		Copper	1.1	04
1.6	80	B6 (DOHC)	08/94 → 09/98	**CT5KMMR11**		Copper	1.1	04
	80	B6 (DOHC)	08/94 → 09/98	**CT6KMR11**		Copper	1.1	04
1.6 Protégé	80	B6 (DOHC)	08/94 → 09/98	**CT5KMMR11**		Copper	1.1	04
	80	B6 (DOHC)	08/94 → 09/98	**CT6KMR11**		Copper	1.1	04
1.8	92	BP (DOHC)	07/94 → 09/98	**CT5KMMR11**		Copper	1.1	04
	92	BP (DOHC)	07/94 → 09/98	**CT6KMR11**		Copper	1.1	04
1.8 16V	84	BP-ZE	08/94 → 09/98	**CT5KMMR11**		Copper	1.1	04
1.8 Protégé	92	BP (DOHC)	07/94 → 09/98	**CT5KMMR11**		Copper	1.1	04
	92	BP (DOHC)	07/94 → 09/98	**CT6KMR11**		Copper	1.1	04
PROTÉGÉ VI								
1.4	53	B3 (16V)	01/01 → 05/04	**CT5KMMR11**		Copper	1.1	04
1.4 16V	54	B3 ME	09/98 → 01/01	**CT5KMMR11**		Copper	1.1	04
	54	B3 ME	09/98 → 01/01	**CT5KMMR11**		Copper	1.1	04
1.5 16V	65	ZL06	09/98 → 01/01	**CT5KMMR11**		Copper	1.1	04
	65	ZL05	09/98 → 01/01	**CT5KMMR11**		Copper	1.1	04
1.8 Protégé	92	BP (DOHC)	05/98 → 05/04	**CT5KMMR11**		Copper	1.1	04
	92	BP (DOHC)	05/98 → 05/04	**CT6KMR11**		Copper	1.1	04
1.9 16V	84	FP55	09/98 → 05/04	**CT5KMMR11**		Copper	1.1	04
	84	FP	09/98 → 05/04	**CT5KMMR11**		Copper	1.1	04
ROADSTER II								
1.6 16V	81	B6D	05/98 → 10/05	**CT5KMMR11**		Copper	1.1	04
1.8	103	BPD	01/98 → 07/02	**CT6KMR11**		Copper	1.1	04
	107	BP6J	08/02 → 10/05	**CT6KMR11**		Copper	1.1	04
1.8 16V	102	BPD	11/00 → 10/05	**CT6KMR11**		Copper	1.1	04
	103	BP-ZE	05/98 → 10/05	**CT6KMR11**		Copper	1.1	04
	107	BPD	11/00 → 10/05	**CT6KMR11**		Copper	1.1	04
	107	BP-ZE	11/00 → 10/05	**CT6KMR11**		Copper	1.1	04
TELSTAR III								
1.6	60	F6	06/87 → 05/92	**CT5FMR**		Copper	0.8	04
1.8	65	F8 (12V)	11/87 → 05/92	**7LPR**		Nickel	0.8	04
	65	F8 (12V)	11/87 → 05/92	**CT6KMR**		Copper	0.8	04
2.0	66	FE (12V)	09/87 → 10/90	**CT6KMMR**		Copper	0.8	04
2.0 12V	79	FE (12V)	09/87 → 05/92	**CT6KMMR**		Copper	0.8	04
2.2 12V	85	F2	11/87 → 07/91	**CT5FMR**		Copper	0.8	04
TELSTAR IV								
1.8 i	77	FP	01/92 → 04/97	**CT5KMMR11**		Copper	1.1	04
	78	FP	05/94 → 06/97	**CT5KMMR11**		Copper	1.1	04
2.0 i	85	FS	01/92 → 04/97	**CT6KMR11**		Copper	1.1	04
2.0 i 4WD	85	FS	04/92 → 04/97	**CT6KMR11**		Copper	1.1	04
VERISA								
1.5	83	ZY-VE	07/04 →	**CT5KMMR11**	→ 09/06	Copper	1.1	04

	kW					CORE		QTY
MAZDA								
XEDOS 6								
1.6 16V	79	B6 (DOHC)	06/94 → 10/99	**CT5KMMR11**		Copper	1.1	04
	83	B69	08/92 → 05/94	**CT6KMR11**		Copper	1.1	04
2.0 V6	103	KF1	06/94 → 10/99	**CT6KMR11**		Copper	1.1	06
	106	KF1	01/92 → 05/94	**CT6KMR11**		Copper	1.1	06
XEDOS 9								
2.0 24V	105	KF	08/93 → 01/00	**CT5KMMR11**		Copper	1.1	06
MERCEDES-BENZ								
A CLASS (W168)								
A 140 (168.031, 168.131)	60	M 166.960	01/01 → 08/04	**YJT6KMR**		Copper	1.0	04
	60	M 166.940	07/97 → 08/04	**YJT6KMR**		Copper	1.0	04
A 160 (168.033, 168.133)	75	M 166.960	07/97 → 08/04	**YJT6KMR**		Copper	1.0	04
A 190 (168.032, 168.132)	92	M 166.990	03/99 → 08/04	**YJT6KMR**		Copper	1.0	04
A 190 Classic (168.032, 168.132)	92	M 166.990	03/99 → 08/04	**YJT6KMR**		Copper	1.0	04
A 210 (168.035, 168.135)	103	M 166.995	03/02 → 08/04	**YJT6KMR**		Copper	1.0	04
A CLASS (W169)								
A 150 (169.031, 169.331)	70	M 266.920	09/04 → 06/12	**CT6KMR11**	→ 03/08	Copper	1.1	04
A 160 (169.031, 169.331)	70	M 266.920	04/09 → 06/12	**CT6KMR11**		Copper	1.1	04
A 170 (169.032, 169.332)	85	M 266.940	09/04 → 06/12	**CT6KMR11**	→ 03/08	Copper	1.1	04
A 180 (169.032, 169.332)	85	M 266.940	04/09 → 06/12	**CT6KMR11**		Copper	1.1	04
A 200 (169.033, 169.333)	100	M 266.960	09/04 → 06/12	**CT6KMR11**		Copper	1.1	04
B CLASS (W245)								
B 150 (245.231)	70	M 266.920	03/05 → 11/11	**CT6KMR11**	→ 03/08	Copper	1.1	04
B 160 (245.231)	70	M 266.920	04/09 → 11/11	**CT6KMR11**		Copper	1.1	04
B 170 (245.232)	85	M 266.940	03/05 → 11/11	**CT6KMR11**	→ 03/08	Copper	1.1	04
B 170 NGT (245.233)	85	M 266.960	04/08 → 11/11	**CT6KMR11**	→ 06/09	Copper	1.1	04
B 180 (245.232)	85	M 266.940	04/09 → 11/11	**CT6KMR11**		Copper	1.1	04
B 180 NGT (245.233)	85	M 266.960	04/08 → 11/11	**CT6KMR11**	06/09 →	Copper	1.1	04
B 200 (245.233)	100	M 266.960	03/05 → 11/11	**CT6KMR11**		Copper	1.1	04

	kW					CORE		QTY
MERCEDES-BENZ								
C CLASS (W202)								
C 180 (202.018)	89	M 111.921	11/94 → 05/00	**YJT6KMR**		Copper	1.0	04
	90	M 111.920	03/93 → 05/00	**CT5KMMR**	07/97 →	Copper	0.8	04
	90	M 111.921	03/93 → 05/00	**CT5KMMR**	07/97 →	Copper	0.8	04
	90	M 111.921	03/93 → 05/00	**YJT6KMR**	07/97 →	Copper	1.0	04
	90	M 111.920	03/93 → 05/00	**YJT6KMR**	07/97 →	Copper	1.0	04
C 200 (202.020)	100	M 111.941	01/94 → 05/00	**CT5KMMR**	→ 06/97	Copper	0.8	04
	100	M 111.945	01/94 → 05/00	**CT5KMMR**	→ 06/97	Copper	0.8	04
	100	M 111.945	01/94 → 05/00	**YJT6KMR**	→ 06/97	Copper	1.0	04
	100	M 111.941	01/94 → 05/00	**YJT6KMR**	→ 06/97	Copper	1.0	04
C 200 CGI (202.020)	100	M 111.941	01/94 → 05/00	**CT5KMMR**	→ 06/97	Copper	0.8	04
	100	M 111.945	01/94 → 05/00	**CT5KMMR**	→ 06/97	Copper	0.8	04
	100	M 111.941	01/94 → 05/00	**YJT6KMR**	→ 06/97	Copper	1.0	04
	100	M 111.945	01/94 → 05/00	**YJT6KMR**	→ 06/97	Copper	1.0	04
C 200 Kompressor (202.025)	132	M 111.944	10/95 → 05/00	**CT5KMMR**		Copper	0.8	04
	141	M 111.944	11/96 → 05/00	**CT5KMMR**		Copper	0.8	04
C 220 (202.022)	110	M 111.961	03/93 → 05/00	**CT5KMMR**		Copper	0.8	04
C 230 (202.023)	110	M 111.974	06/96 → 06/97	**YJT6KMR**		Copper	1.0	04
C 230 Kompressor (202.024)	142	M 111.975	10/95 → 05/00	**YJT6KMR**		Copper	1.0	04
C 280 (202.028)	142	M 104.941	05/93 → 05/00	**CT5KMMR**		Copper	0.8	06
C 36 AMG (202.028)	206	M 104.941 (AMG 3.6)	05/94 → 05/00	**CT5KMMR**	→ 01/98	Copper	0.8	06
C CLASS Station wagon (S202)								
C 180 T (202.078)	90	M 111.920	06/96 → 09/00	**CT5KMMR**	07/97 →	Copper	0.8	04
	90	M 111.921	06/96 → 09/00	**CT5KMMR**	07/97 →	Copper	0.8	04
	90	M 111.920	06/96 → 09/00	**YJT6KMR**	07/97 →	Copper	1.0	04
	90	M 111.921	06/96 → 09/00	**YJT6KMR**	07/97 →	Copper	1.0	04
C 200 T (202.080)	100	M 111.941	06/96 → 03/01	**CT5KMMR**		Copper	0.8	04
	100	M 111.945	06/96 → 03/01	**CT5KMMR**		Copper	0.8	04
	100	M 111.941	06/96 → 03/01	**YJT6KMR**		Copper	1.0	04
	100	M 111.945	06/96 → 03/01	**YJT6KMR**		Copper	1.0	04
C 200 T Kompressor (202.082)	141	M 111.944	11/96 → 03/01	**CT5KMMR**		Copper	0.8	04
C 230 T (202.083)	110	M 111.974	06/96 → 06/98	**YJT6KMR**		Copper	1.0	04
C 230 T Kompressor (202.085)	142	M 111.975	06/97 → 09/00	**YJT6KMR**		Copper	1.0	04
CABRIOLET (A124)								
300 CE-24 (124.061)	162	M 104.980	04/92 → 06/93	**CT5KMMR**		Copper	0.8	06
	170	M 104.980	04/92 → 06/93	**CT5KMMR**		Copper	0.8	06
CL CLASS Coupé (C140)								
600 S/SEC (140.076)	290	M 120.980	09/92 → 02/99	**CT5KMMR11**		Copper	1.1	12
	290	M 120.982	09/92 → 02/99	**CT5KMMR11**		Copper	1.1	12
S 500 (140.070)	235	M 119.970	10/92 → 02/99	**CT6KMR11**		Copper	1.1	08

	kW					CORE		QTY
MERCEDES-BENZ								
CL CLASS Coupé (C140)								
SEC/CL 420 (140.063)	205	M 119.971	10/94 → 02/99	**CT6KMR11**		Copper	1.1	08
	205	M 119.981	10/94 → 02/99	**CT6KMR11**		Copper	1.1	08
SEC/CL 500 (140.070)	235	M 119.970	10/92 → 02/99	**CT6KMR11**		Copper	1.1	08
SEC/CL 600 (140.076)	290	M 120.980	09/92 → 02/99	**CT5KMMR11**		Copper	1.1	12
	290	M 120.982	09/92 → 02/99	**CT5KMMR11**		Copper	1.1	12
CLK (C208)								
200 (208.335)	100	M 111.945	06/97 → 06/02	**YJT6KMR**		Copper	1.0	04
200 Kompressor (208.345)	141	M 111.944	06/97 → 06/00	**CT5KMMR**		Copper	0.8	04
230 Kompressor (208.347)	142	M 111.975	06/97 → 06/00	**YJT6KMR**		Copper	1.0	04
	142	M 111.973	06/97 → 06/00	**YJT6KMR**		Copper	1.0	04
CLK Cabriolet (A208)								
200 (208.435)	100	M 111.941	03/98 → 03/02	**CT5KMMR**		Copper	0.8	04
	100	M 111.945	03/98 → 03/02	**CT5KMMR**		Copper	0.8	04
	100	M 111.941	03/98 → 03/02	**YJT6KMR**		Copper	1.0	04
	100	M 111.945	03/98 → 03/02	**YJT6KMR**		Copper	1.0	04
200 Kompressor (208.445)	141	M 111.944	03/98 → 06/00	**CT5KMMR**		Copper	0.8	04
230 Kompressor (208.447)	142	M 111.973	03/98 → 06/00	**YJT6KMR**		Copper	1.0	04
	142	M 111.975	03/98 → 06/00	**YJT6KMR**		Copper	1.0	04
COUPE (C124)								
220 CE (124.042)	110	M 111.960	10/92 → 05/93	**CT5KMMR**		Copper	0.8	04
300 CE (124.051)	162	M 104.980	09/89 → 12/92	**CT5KMMR**		Copper	0.8	06
300 CE (124.052)	162	M 104.992	10/92 → 05/93	**CT5KMMR**		Copper	0.8	06
300 CE-24 (124.051)	162	M 104.980	09/89 → 12/92	**CT5KMMR**		Copper	0.8	06
	170	M 104.980	09/89 → 08/92	**CT5KMMR**		Copper	0.8	06
320 CE (124.052)	162	M 104.992	10/92 → 05/93	**CT5KMMR**		Copper	0.8	06
E CLASS (W124)								
E 36 AMG	200	M 104.992 (AMG 3.6)	07/94 → 01/95	**CT5KMMR**		Copper	0.8	06
E 60 AMG (124.036)	280	M 119.974 (AMG 6.0)	05/94 → 06/95	**CT6KMR11**		Copper	1.1	08
E 200 (124.019)	100	M 111.940	06/93 → 06/95	**CT5KMMR**		Copper	0.8	04
E 220 (124.022)	110	M 111.960	06/93 → 06/95	**CT5KMMR**		Copper	0.8	04
E 280 (124.028)	145	M 104.942	06/93 → 06/95	**CT5KMMR**		Copper	0.8	06
E 280 (124.029)	142	M 104.942	06/93 → 06/95	**CT5KMMR**		Copper	0.8	06
E 320 (124.032)	162	M 104.992	06/93 → 06/95	**CT5KMMR**		Copper	0.8	06
E 420 (124.034)	205	M 119.975	06/93 → 06/95	**CT6KMR11**		Copper	1.1	08
E 500 (124.036)	235	M 119.974	06/93 → 06/95	**CT6KMR11**		Copper	1.1	08
E CLASS (W210)								
E 50 AMG (210.072)	255	M 119.985 (AMG 5.0)	02/96 → 08/97	**CT6KMR11**		Copper	1.1	08
E 200 (210.035)	100	M 111.942	06/95 → 08/00	**YJT6KMR**		Copper	1.0	04

	kW					CORE		QTY
MERCEDES-BENZ								
E CLASS (W210)								
E 200 Kompressor (210.045)	137	M 111.947	06/97 → 03/02	**YJT6KMR**		Copper	1.0	04
E 230 (210.037)	110	M 111.970	06/95 → 06/97	**YJT6KMR**		Copper	1.0	04
E 280 (210.053)	142	M 104.945	01/96 → 06/97	**CT5KMMR**		Copper	0.8	06
E 320 (210.055)	162	M 104.995	06/95 → 06/97	**CT5KMMR**		Copper	0.8	06
E 420 (210.072)	205	M 119.985	01/96 → 06/97	**CT6KMR11**		Copper	1.1	08
E CLASS Cabriolet (A124)								
E 36 AMG (124.066)	200	M 104.992 (AMG 3.6)	05/94 → 03/98	**CT5KMMR**		Copper	0.8	06
E 200 (124.060)	100	M 111.940	06/93 → 03/98	**CT5KMMR**		Copper	0.8	04
E 220 (124.062)	110	M 111.960	06/93 → 03/98	**CT5KMMR**		Copper	0.8	04
E 320 (124.066)	162	M 104.992	06/93 → 03/98	**CT5KMMR**		Copper	0.8	06
E CLASS Coupé (C124)								
E 36 AMG (124.052)	195	M 104.992 (AMG 3.6)	06/93 → 04/95	**CT5KMMR**		Copper	0.8	06
	200	M 104.992 (AMG 3.6)	05/94 → 06/97	**CT5KMMR**		Copper	0.8	06
E 200 (124.040)	100	M 111.940	06/93 → 06/97	**CT5KMMR**		Copper	0.8	04
E 220 (124.042)	110	M 111.960	06/93 → 06/97	**CT5KMMR**		Copper	0.8	04
E 320 (124.052)	162	M 104.992	06/93 → 06/97	**CT5KMMR**		Copper	0.8	06
E CLASS Station wagon (S124)								
E 36 T AMG (124.092)	200	M 104.992 (AMG 3.6)	05/94 → 06/96	**CT5KMMR**		Copper	0.8	06
E 200 T (124.079)	100	M 111.940	06/93 → 06/96	**CT5KMMR**		Copper	0.8	04
E 220 T (124.082)	110	M 111.960	06/93 → 06/96	**CT5KMMR**		Copper	0.8	04
E 280 T (124.088)	142	M 104.942	06/93 → 06/96	**CT5KMMR**		Copper	0.8	06
	145	M 104.942	06/93 → 06/96	**CT5KMMR**		Copper	0.8	06
E 300 TE-24 AMG (124.091)	162	M 104.980	06/93 → 06/96	**CT5KMMR**		Copper	0.8	06
E320 (124.092)	162	M 104.992	06/93 → 06/96	**CT5KMMR**		Copper	0.8	06
E 320 T (124.092)	162	M 104.992	06/93 → 06/96	**CT5KMMR**		Copper	0.8	06
E CLASS Station wagon (S210)								
E 200 T (210.235)	100	M 111.942	06/96 → 08/00	**YJT6KMR**		Copper	1.0	04
E 200 T Kompressor (210.245)	137	M 111.947	06/97 → 03/03	**YJT6KMR**		Copper	1.0	04
E 230 T (210.237)	110	M 111.970	06/96 → 06/97	**YJT6KMR**		Copper	1.0	04
E 420 T (210.272)	205	M 119.985	06/96 → 06/97	**CT6KMR11**		Copper	1.1	08
G CLASS (W463)								
320 GE (463.208)	155	M 104.996	09/94 → 11/97	**CT5KMMR**		Copper	0.8	06
G 36 AMG (463.230)	200	M 104.996 (AMG 3.6)	01/95 → 07/98	**CT5KMMR**		Copper	0.8	06
G 320 (463.230, 463.231)	155	M 104.996	09/94 → 10/97	**CT5KMMR**		Copper	0.8	06
G 500 E (463.228)	177	M 117.965	09/93 →	**CW7LP**		Nickel	0.8	08
	177	M 117.965	09/93 →	**CT6FM**		Copper	0.8	08

	kW					CORE		QTY
MERCEDES-BENZ								
KOMBI Station wagon (S124)								
220 TE (124.082)	110	M 111.960	10/92 → 05/93	**CT5KMMR**		Copper	0.8	04
280 TE (124.088)	145	M 104.942	10/92 → 06/93	**CT5KMMR**		Copper	0.8	06
300 TE (124.092)	162	M 104.992	10/92 → 06/93	**CT5KMMR**		Copper	0.8	06
300 TE-24 (124.091)	162	M 104.980	09/89 → 08/92	**CT5KMMR**		Copper	0.8	06
	170	M 104.980	09/89 → 08/92	**CT5KMMR**		Copper	0.8	06
320 TE (124.092)	162	M 104.992	10/92 → 06/93	**CT5KMMR**		Copper	0.8	06
M CLASS (W163)								
ML 230 (163.136)	110	M 111.977	02/98 → 06/05	**YJT6KMR**	→ 05/00	Copper	1.0	04
S CLASS (W126)								
280 SE, SEL (126.022, 126.023)	136	M 110.989	10/97 → 07/85	**CT6FM**		Copper	0.8	06
	136	M 110.987	10/97 → 07/85	**CT6FM**		Copper	0.8	06
500 SE, SEL	185	M 117.965	09/87 → 06/91	**CW7LP**		Nickel	0.8	08
	185	M 117.965	09/87 → 06/91	**CT6FM**		Copper	0.8	08
	195	M 117.965	09/87 → 06/91	**CW7LP**		Nickel	0.8	08
	195	M 117.965	09/87 → 06/91	**CT6FM**		Copper	0.8	08
500 SE, SEL Cat	185	M 117.965	06/89 → 06/91	**CW7LP**		Nickel	0.8	08
	185	M 117.965	06/89 → 06/91	**CT6FM**		Copper	0.8	08
560 SE, SEL	205	M 117.968	08/87 → 06/91	**CW7LP**		Nickel	0.8	08
	205	M 117.968	08/87 → 06/91	**CT6FM**		Copper	0.8	08
S CLASS (W140)								
300 SE 2.8 (140.028)	145	M 104.944	01/93 → 10/98	**CT5KMMR**		Copper	0.8	06
300 SE, SEL/ S320 (140.032, 140.033)	170	M 104.990	03/91 → 10/98	**CT5KMMR**		Copper	0.8	06
	170	M 104.994	03/91 → 10/98	**CT5KMMR**		Copper	0.8	06
400 SE, SEL/S420 (140.042, 140.043)	210	M 119.971	02/91 → 10/98	**CT6KMR11**		Copper	1.1	08
500 SE, SEL (140.050, 140.051)	240	M 119.970	02/91 → 10/98	**CT6KMR11**		Copper	1.1	08
500 SEL (140.050, 140.051)	235	M 119.980	01/93 → 10/98	**CT6KMR11**		Copper	1.1	08
	235	M 119.970	01/93 → 10/98	**CT6KMR11**		Copper	1.1	08
600 SE, SEL (140.056, 140.057)	300	M 120.980	04/91 → 12/92	**CT5KMMR11**		Copper	1.1	12
	300	M 120.982	04/91 → 12/92	**CT5KMMR11**		Copper	1.1	12
S 280 (140.028)	142	M 104.944	02/93 → 10/98	**CT5KMMR**		Copper	0.8	06
S 420 (140.042)	205	M 119.971	01/93 → 10/98	**CT6KMR11**		Copper	1.1	08
S 500 (140.050, 140.051)	235	M 119.970	01/93 → 10/98	**CT6KMR11**		Copper	1.1	08
	235	M 119.980	01/93 → 10/98	**CT6KMR11**		Copper	1.1	08
S 600 (140.056, 140.057)	290	M 120.980	01/93 → 10/98	**CT5KMMR11**		Copper	1.1	12
	290	M 120.982	01/93 → 10/98	**CT5KMMR11**		Copper	1.1	12
S 600 / 600 SEL (140.056, 140.057)	290	M 120.980	01/93 → 10/98	**CT5KMMR11**		Copper	1.1	12
	290	M 120.982	01/93 → 10/98	**CT5KMMR11**		Copper	1.1	12

	kW					CORE		QTY
MERCEDES-BENZ								
S CLASS Coupé (C126)								
500 SEC (126.044)	177	M 117.963	04/99 → 09/04	**CT6FM**		Copper	0.8	08
	185	M 117.965	08/87 → 06/91	**CT6FM**		Copper	0.8	08
500 SEC Cat	185	M 117.965	06/89 → 06/91	**CT6FM**		Copper	0.8	08
S CLASS Coupé (C140)								
600 S/SEC (140.076)	290	M 120.982	09/92 → 02/99	**CT5KMMR11**		Copper	1.1	12
	290	M 120.980	09/92 → 02/99	**CT5KMMR11**		Copper	1.1	12
S 500 (140.070)	235	M 119.970	10/92 → 02/99	**CT6KMR11**		Copper	1.1	08
SEC/CL 420 (140.063)	205	M 119.971	10/94 → 02/99	**CT6KMR11**		Copper	1.1	08
	205	M 119.981	10/94 → 02/99	**CT6KMR11**		Copper	1.1	08
SEC/CL 500 (140.070)	235	M 119.970	10/92 → 02/99	**CT6KMR11**		Copper	1.1	08
SEC/CL 600 (140.076)	290	M 120.980	09/92 → 02/99	**CT5KMMR11**		Copper	1.1	12
	290	M 120.982	09/92 → 02/99	**CT5KMMR11**		Copper	1.1	12
SL (R129)								
280 (129.058)	142	M 104.943	08/93 → 10/01	**CT5KMMR**		Copper	0.8	06
300 SL-24 (129.061)	170	M 104.981	03/89 → 07/93	**CT5KMMR**		Copper	0.8	06
320 (129.063)	170	M 104.991	09/93 → 10/01	**CT5KMMR**		Copper	0.8	06
500 (129.067)	235	M 119.982	09/92 → 10/01	**CT6KMR11**		Copper	1.1	08
	235	M 119.972	09/92 → 10/01	**CT6KMR11**		Copper	1.1	08
500 SL (129.066)	240	M 119.960	09/89 → 08/92	**7LPR**		Nickel	0.8	08
	240	M 119.972	09/89 → 08/92	**7LPR**		Nickel	0.8	08
	240	M 119.960	09/89 → 08/92	**CT6KMR**		Copper	0.8	08
	240	M 119.972	09/89 → 08/92	**CT6KMR**		Copper	0.8	08
	240	M 119.972	09/89 → 08/92	**CT6KMR11**		Copper	1.1	08
	240	M 119.960	09/89 → 08/92	**CT6KMR11**		Copper	1.1	08
600 (129.076)	290	M 120.983	07/94 → 10/01	**CT5KMMR11**		Copper	1.1	12
	290	M 120.981	07/94 → 10/01	**CT5KMMR11**		Copper	1.1	12
600 SL	300	M 120.981	02/92 → 08/94	**CT5KMMR11**		Copper	1.1	12
	300	M 120.983	02/92 → 08/94	**CT5KMMR11**		Copper	1.1	12
SL 280 (129.058)	142	M 104.943	08/93 → 10/01	**CT5KMMR**		Copper	0.8	06
SLK (R170)								
200 (170.435)	100	M 111.946	09/96 → 03/00	**YJT6KMR**		Copper	1.0	04
200 Kompressor (170.445)	141	M 111.943	10/96 → 03/00	**CT5KMMR**		Copper	0.8	04
230 Kompressor (170.447)	142	M 111.973	09/96 → 03/00	**YJT6KMR**		Copper	1.0	04
SPRINTER 2-t (901, 902)								
214	105	M 111.979	02/95 → 05/06	**YJT6KMR**		Copper	1.0	04
SPRINTER 3-t (903)								
314	105	M 111.979	02/95 → 05/06	**YJT6KMR**		Copper	1.0	04
SPRINTER 4-t (904)								
414 4x4	105	M 111.979	05/97 → 05/06	**YJT6KMR**		Copper	1.0	04
414	105	M 111.979	02/96 → 05/06	**YJT6KMR**		Copper	1.0	04

	kW					CORE		QTY
MERCEDES-BENZ								
Tre volumi (W124)								
200 E (124.019)	100	M 111.940	10/92 → 06/93	**CT5KMMR**		Copper	0.8	04
220 E (124.022)	110	M 111.960	10/92 → 06/93	**CT5KMMR**		Copper	0.8	04
280 E (124.028)	145	M 104.942	10/92 → 06/93	**CT5KMMR**		Copper	0.8	06
300 E (124.028)	145	M 104.942	10/92 → 06/93	**CT5KMMR**		Copper	0.8	06
300 E-24 (124.031)	162	M 104.980	09/88 → 08/92	**CT5KMMR**		Copper	0.8	06
	170	M 104.980	09/88 → 08/92	**CT5KMMR**		Copper	0.8	06
320 E (124.032)	162	M 104.992	10/92 →	**CT5KMMR**		Copper	0.8	06
400 E 4.2 (124.034)	205	M 119.975	10/92 → 06/93	**CT6KMR11**		Copper	1.1	08
500 E (124.036)	240	M 119.974	01/91 → 06/93	**CT6KMR11**		Copper	1.1	08
500 E AMG 6.0 (124.036)	275	M 119.974 (AMG 6.0)	01/92 → 06/93	**CT6KMR11**		Copper	1.1	08
V CLASS (638/2)								
V 200 (638.214, 638.294)	95	M 111.950	02/97 → 07/03	**YJT6KMR**		Copper	1.0	04
	95	M 111.948	02/97 → 07/03	**YJT6KMR**		Copper	1.0	04
V 230 (638.234, 638.294)	105	M 111.978	10/96 → 07/03	**YJT6KMR**		Copper	1.0	04
V 280 (638.244, 638.294)	128	M 104.900	08/97 → 07/03	**D6KMR**		Copper	0.9	06
VANEO (414)								
1.4	60	M 166.940	06/02 → 07/05	**YJT6KMR**		Copper	1.0	04
1.6 (414.700)	60	M 166.961	02/02 → 07/05	**YJT6KMR**		Copper	1.0	04
	75	M 166.961	02/02 → 07/05	**YJT6KMR**		Copper	1.0	04
1.9 (414.700)	92	M 166.991	02/02 → 07/05	**YJT6KMR**		Copper	1.0	04
VITO Autobus (638)								
113 2.0 (638.114, 638.194)	95	M 111.950	02/96 → 07/03	**YJT6KMR**		Copper	1.0	04
	95	M 111.948	02/96 → 07/03	**YJT6KMR**		Copper	1.0	04
114 2.3 (638.134, 638.194)	105	M 111.978	12/96 → 07/03	**YJT6KMR**		Copper	1.0	04

MINI								
MINI (R50, R53)								
Cooper	85	W10 B16 A	06/01 → 09/06	**D6KMR**		Copper	0.9	04
Cooper S	120	W11 B16 A	03/02 → 09/06	**D6KMR**		Copper	0.9	04
	125	W11 B16 A	07/04 → 09/06	**D6KMR**		Copper	0.9	04
One	55	W10 B14 A	04/03 → 09/06	**D6KMR**		Copper	0.9	04
	66	W10 B16 A	06/01 → 09/06	**D6KMR**		Copper	0.9	04
MINI Cabriolet (R52)								
Cooper	85	W10 B16 A	07/04 → 11/07	**D6KMR**		Copper	0.9	04
Cooper S	120	W11 B16 A	07/04 → 11/07	**D6KMR**		Copper	0.9	04
	125	W11 B16 A	07/04 → 11/07	**D6KMR**		Copper	0.9	04
One	66	W10 B16 A	07/04 → 11/07	**D6KMR**		Copper	0.9	04

	kW					CORE		QTY
MITSUBISHI								
ASPIRE VI								
2.0 (EA2A)	98	4G63 (SOHC 16V)	09/00 → 10/04	**CT6KMR11**	→ 05/03	Copper	1.1	04
	100	4G63 (SOHC 16V)	09/96 → 09/00	**CT6KMR11**		Copper	1.1	04
CARISMA								
1.6 (DA1A)	66	4G92 (SOHC 16V)	07/95 → 06/06	**CT6KMR11**		Copper	1.1	04
	70	4G92 (SOHC 16V)	12/98 → 06/06	**CT6KMR11**		Copper	1.1	04
	73	4G92 (SOHC 16V)	05/97 → 06/06	**CT6KMR11**		Copper	1.1	04
	76	4G92 (SOHC 16V)	09/00 → 06/06	**CT6KMR11**		Copper	1.1	04
1.8 (DA2A) CEDIA	85	4G93 (SOHC 16V)	07/95 → 06/06	**CT6KMR11**	→ 02/99	Copper	1.1	04
CEDIA								
1.3	60	4G13 (16V)	09/03 →	**CT6KMR11**		Copper	1.1	04
1.6 (CS3A)	72	4G18	09/03 →	**CT6KMR11**		Copper	1.1	04
CHARIOT								
1.8 (N31W)	90	4G93 (SOHC 16V)	10/91 → 10/98	**CT6KMR**		Copper	0.8	04
1.8 4WD (N41W)	90	4G93 (SOHC 16V)	10/91 → 10/98	**CT6KMR**		Copper	0.8	04
2.0 (N33W)	98	4G63 (SOHC 16V)	10/92 → 10/98	**CT6KMR11**		Copper	1.1	04
2.0 4WD (N43W)	98	4G63 (SOHC 16V)	10/92 → 10/98	**CT6FMR**		Copper	0.8	04
2.0 GLXi (D04W)	74	4G63 (SOHC 8V)	06/88 → 04/91	**CT6FMR**		Copper	0.8	04
2.0 GLXi 4WD (D08W)	74	4G63 (SOHC 8V)	06/88 → 04/91	**CT6FMR**		Copper	0.8	04
2.0 i GLX 16V (N33W)	98	4G63 (SOHC 16V)	10/92 → 10/98	**CT6KMR11**		Copper	1.1	04
2.4 i (N34W)	102	4G64 (SOHC 16V)	10/92 → 10/98	**CT6KMR11**	→ 05/96	Copper	1.1	04
COLT								
1.5	80	4A91	05/06 → 07/09	**CT6KHMR11**		Copper	1.1	04
2.0 (K62T)	90	4G63 (SOHC 16V)	06/96 → 12/07	**CT5KMMR11**	→ 06/01	Copper	1.1	04
2.4 4WD (K75T)	97	4G64 (SOHC 16V)	06/96 → 12/07	**CT5KMMR11**		Copper	1.1	04
COLT III								
1.3 (C51A)	51	4G13 (8V)	04/88 → 05/92	**CW7LPR**	→ 06/90	Nickel	0.8	04
	51	4G13 (8V)	04/88 → 05/92	**CT6FMR**	→ 06/90	Copper	0.8	04
1.5 GLXi (C52A)	62	4G15	04/88 → 05/92	**CT6FMR**		Copper	0.8	04
	62	4G15	04/88 → 05/92	**CW7LPR**		Nickel	0.8	04
COLT IV								
1.6 (CA4A)	66	4G92 (SOHC 16V)	02/94 → 04/96	**CT5KMMR11**		Copper	1.1	04
	66	4G92 (SOHC 16V)	02/94 → 04/96	**CT6KMR11**		Copper	1.1	04
1.6 4WD (CC4A)	84	4G92 (SOHC 16V)	08/93 → 08/95	**CT5KMMR11**	12/93 →	Copper	1.1	04
	84	4G92 (SOHC 16V)	08/93 → 08/95	**CT6KMR11**	12/93 →	Copper	1.1	04
1.6 GLXi 16V (CA4A)	83	4G92 (SOHC 16V)	04/92 → 04/96	**CT5KMMR11**	12/93 →	Copper	1.1	04
	83	4G92 (SOHC 16V)	04/92 → 04/96	**CT6KMR11**	12/93 →	Copper	1.1	04
1.8 GTi 16V (CA5A)	103	4G93 (DOHC 16V)	04/92 → 04/96	**CT6KMR11**		Copper	1.1	04
COLT V								
1600	76	4G92 (SOHC 16V)	09/00 → 09/03	**CT6KMR11**		Copper	1.1	04
1.5 16V (CJ2A)	69	4G15 (16V)	11/95 → 09/03	**CT5FMR**	→ 05/00	Copper	0.8	04
1.6 GLX 16V (CJ4A)	66	4G92 (SOHC 16V)	05/96 → 09/00	**CT5KMMR11**	→ 05/99	Copper	1.1	04
	66	4G92 (SOHC 16V)	05/96 → 09/00	**CT6KMR11**	→ 05/99	Copper	1.1	04

	kW					CORE		QTY
MITSUBISHI								
COLT V								
1600 GLX (CJ4A)	66	4G92 (SOHC 16V)	05/96 → 09/00	**CT5KMMR11**	→ 05/99	Copper	1.1	04
	66	4G92 (SOHC 16V)	05/96 → 09/00	**CT6KMR11**	→ 05/99	Copper	1.1	04
COLT VI								
1.1	55	3A91	10/04 → 06/12	**CT6KHMR11**		Copper	1.1	03
1.1 LPG	55	3A91	10/04 → 06/12	**CT6KHMR11**		Copper	1.1	03
1.5	80	4A91	06/04 → 06/12	**CT6KHMR11**		Copper	1.1	04
1.5 (Z23)	77	4A91	07/06 → 06/12	**CT6KHMR11**		Copper	1.1	04
1.5 4WD	77	4A91	07/06 → 06/12	**CT6KHMR11**		Copper	1.1	04
DELICA III								
2.0 (P23W, P23V)	82	4G63 (SOHC 16V)	06/94 → 05/02	**CT6FMR**		Copper	0.8	04
	82	4G63 (SOHC 16V)	06/94 → 05/02	**CW7LPR**		Nickel	0.8	04
2.0 i (P00W, P03W, P13W)	83	4G63 (SOHC 16V)	07/96 →	**CT5KMMR11**	→ 08/97	Copper	1.1	04
ECLIPSE								
2.0 i 16V (D22A, D27A)	110	4G63 (DOHC 16V)	04/91 → 11/95	**CT6FMR**		Copper	0.8	04
	110	4G63 (DOHC 16V)	04/91 → 11/95	**CW7LPR**		Nickel	0.8	04
2.0 i 16V 4WD (D22A, D27A)	110	4G63 (DOHC 16V)	04/91 → 11/95	**CT6FMR**		Copper	0.8	04
	110	4G63 (DOHC 16V)	04/91 → 11/95	**CW7LPR**		Nickel	0.8	04
2.0 Turbo	147	4G63 T (DOHC 16V)	12/98 → 03/94	**CT6FMR**		Copper	0.8	04
	147	4G63 T (DOHC 16V)	12/89 → 03/94	**CW7LPR**		Nickel	0.8	04
ECLIPSE I								
2.0 i 16V (D22A, D27A)	110	4G63 (DOHC 16V)	04/91 → 11/95	**CT6FMR**		Copper	0.8	04
2.0 i 16V 4WD (D22A, D27A)	110	4G63 (DOHC 16V)	04/91 → 11/95	**CT6FMR**		Copper	0.8	04
2.0 Turbo	147	4G63 T (DOHC 16V)	12/98 → 03/94	**CT6FMR**		Copper	0.8	04
ECLIPSE II								
2000 GS 16V (D32A)	107	4G63 (DOHC 16V)	12/95 → 04/99	**CT6FMR**		Copper	0.8	04
	107	4G63 (DOHC 16V)	12/95 → 04/99	**CW7LPR**		Nickel	0.8	04
ETERNA IV								
1.6 (E31A)	55	4G32	01/88 → 10/92	**CT6FMR**		Copper	0.8	04
1.8 (E32A)	66	4G37	11/88 → 10/92	**CW7LPR**		Nickel	0.8	04
	66	4G37	11/88 → 10/92	**CT6FMR**		Copper	0.8	04
2.0 (E39A, E38A, E33A)	80	4G63 (SOHC 8V)	04/89 → 10/92	**CW7LPR**		Nickel	0.8	04
	80	4G63 (SOHC 8V)	04/89 → 10/92	**CT6FMR**		Copper	0.8	04
2.0 4WD (E33A, E38A, E39A)	80	4G63 (SOHC 8V)	04/89 → 10/92	**CW7LPR**		Nickel	0.8	04
	80	4G63 (SOHC 8V)	04/89 → 10/92	**CT6FMR**		Copper	0.8	04
2.0 GTI 16V (E39A, E38A, E33A)	106	4G63 (DOHC 16V)	11/88 → 10/92	**CT6FMR**		Copper	0.8	04
	106	4G63 (DOHC 16V)	11/88 → 10/92	**CW7LPR**		Nickel	0.8	04
	107	4G63 (DOHC 16V)	11/88 → 10/92	**CW7LPR**		Nickel	0.8	04
	107	4G63 (DOHC 16V)	11/88 → 10/92	**CT6FMR**		Copper	0.8	04
2.0 GTI 16V 4x4 (E38A, E39A, E33A)	106	4G63 (DOHC 16V)	07/89 → 12/92	**CT6FMR**		Copper	0.8	04
	106	4G63 (DOHC 16V)	07/89 → 12/92	**CW7LPR**		Nickel	0.8	04

	kW					CORE		QTY
MITSUBISHI								
ETERNA V								
1.8 (E52A)	85	4G93 (SOHC 16V)	02/94 → 08/96	**CT5KMMR11**		Copper	1.1	04
1.8 GLSI (E52A)	93	4G93 (SOHC 16V)	11/92 → 08/96	**CT6KMR11**		Copper	1.1	04
2.0 GLSI (E55A)	101	4G63 (SOHC 16V)	11/92 → 08/96	**CT6FMR**		Copper	0.8	04
	101	4G63 (SOHC 16V)	11/92 → 08/96	**CW7LPR**		Nickel	0.8	04
2.0 GLSI 4WD (E75A)	101	4G63 (SOHC 16V)	11/92 → 08/96	**CT6FMR**		Copper	0.8	04
	101	4G63 (SOHC 16V)	11/92 → 08/96	**CW7LPR**		Nickel	0.8	04
EXPO								
1.8 (N31W)	90	4G93 (SOHC 16V)	10/91 → 10/98	**CT6KMR**		Copper	0.8	04
1.8 4WD (N41W)	90	4G93 (SOHC 16V)	10/91 → 10/98	**CT6KMR**		Copper	0.8	04
2.0 (N33W)	98	4G63 (SOHC 16V)	10/92 → 10/98	**CT6KMR11**		Copper	1.1	04
2.0 4WD (N43W)	98	4G63 (SOHC 16V)	10/92 → 10/98	**CW7LPR**		Nickel	0.8	04
	98	4G63 (SOHC 16V)	10/92 → 10/98	**CT6FMR**		Copper	0.8	04
2.0 i GLX 16V (N33W)	98	4G63 (SOHC 16V)	10/92 → 10/98	**CT6KMR11**		Copper	1.1	04
2.4 i (N34W)	102	4G64 (SOHC 16V)	10/92 → 10/98	**CT6KMR11**	→ 05/96	Copper	1.1	04
GALANT IV								
1.6 (E31A)	55	4G32	01/88 → 10/92	**CT6FMR**		Copper	0.8	04
1.8 (E32A)	66	4G37	11/88 → 10/92	**CW7LPR**		Nickel	0.8	04
	66	4G37	11/88 → 10/92	**CT6FMR**		Copper	0.8	04
2.0 (E39A, E38A, E33A)	80	4G63 (SOHC 8V)	04/89 → 10/92	**CW7LPR**		Nickel	0.8	04
	80	4G63 (SOHC 8V)	04/89 → 10/92	**CT6FMR**		Copper	0.8	04
2.0 4WD (E33A, E38A, E39A)	80	4G63 (SOHC 8V)	04/89 → 10/92	**CW7LPR**		Nickel	0.8	04
	80	4G63 (SOHC 8V)	04/89 → 10/92	**CT6FMR**		Copper	0.8	04
2.0 GTI 16V (E39A, E38A, E33A)	106	4G63 (DOHC 16V)	11/88 → 10/92	**CW7LPR**		Nickel	0.8	04
	106	4G63 (DOHC 16V)	11/88 → 10/92	**CT6FMR**		Copper	0.8	04
	107	4G63 (DOHC 16V)	11/88 → 10/92	**CT6FMR**		Copper	0.8	04
	107	4G63 (DOHC 16V)	11/88 → 10/92	**CW7LPR**		Nickel	0.8	04
2.0 GTI 16V 4x4 (E38A, E39A, E33A)	106	4G63 (DOHC 16V)	07/89 → 12/92	**CW7LPR**		Nickel	0.8	04
	106	4G63 (DOHC 16V)	07/89 → 12/92	**CT6FMR**		Copper	0.8	04
GALANT V								
1.8 (E52A)	85	4G93 (SOHC 16V)	02/94 → 08/96	**CT6KMR11**		Copper	1.1	04
1.8 GLSI (E52A)	93	4G93 (SOHC 16V)	11/92 → 08/96	**CT6KMR11**		Copper	1.1	04
2.0 (E55A)	90	4G63 (SOHC 16V)	04/93 → 03/95	**CW7LPR**		Nickel	0.8	04
	90	4G63 (SOHC 16V)	04/93 → 03/95	**CT6FMR**		Copper	0.8	04
2.0 GLSI (E55A)	101	4G63 (SOHC 16V)	11/92 → 08/96	**CW7LPR**		Nickel	0.8	04
	101	4G63 (SOHC 16V)	11/92 → 08/96	**CT6FMR**		Copper	0.8	04
2.0 GLSI 4WD (E75A)	101	4G63 (SOHC 16V)	11/92 → 08/96	**CW7LPR**		Nickel	0.8	04
	101	4G63 (SOHC 16V)	11/92 → 08/96	**CT6FMR**		Copper	0.8	04
2.0 V6-24 (E64A, E54A)	110	6A12	11/92 → 08/96	**CT6KMR11**		Copper	1.1	06
GALANT VI								
2.0 (EA2A)	98	4G63 (SOHC 16V)	09/00 → 10/04	**CT6KMR11**	→ 05/03	Copper	1.1	04
	100	4G63 (SOHC 16V)	09/96 → 09/00	**CT6KMR11**		Copper	1.1	04

	kW					CORE		QTY
MITSUBISHI								
IO								
1.8 (H76W, H66W)	84	4G93 (SOHC 16V)	11/01 → 06/07	**CT5KMMR11**	→ 02/05	Copper	1.1	04
L 200								
2.0 (K62T)	90	4G63 (SOHC 16V)	06/96 → 12/07	**CT5KMMR11**	→ 06/01	Copper	1.1	04
2.4 4WD (K75T)	97	4G64 (SOHC 16V)	06/96 → 12/07	**CT5KMMR11**		Copper	1.1	04
L 300 III								
2.0 (P13T)	85	4G63 (SOHC 16V)	07/94 → 04/00	**CT6FMR**		Copper	0.8	04
2.0 (P23W, P23V)	82	4G63 (SOHC 16V)	06/94 → 05/02	**CT6FMR**		Copper	0.8	04
2.0 i (P00W, P03W, P13W)	83	4G63 (SOHC 16V)	07/96 →	**CT5KMMR11**	→ 08/97	Copper	1.1	04
L 300 EXPRESS III								
2.0 (P23W, P23V)	82	4G63 (SOHC 16V)	06/94 → 05/02	**CT6FMR**		Copper	0.8	04
L 400								
2.0 (PA3W)	83	4G63 (SOHC 16V)	06/96 → 10/02	**CT6FMR**		Copper	0.8	04
	83	4G63 (SOHC 16V)	09/95 → 10/02	**CW7LPR**		Nickel	0.8	04
2.0 16V (PA3V/W, PB3V, PA3W)	85	4G63 (SOHC 16V)	05/95 → 05/00	**CT6FMR**		Copper	0.8	04
	85	4G63 (SOHC 16V)	05/95 → 05/00	**CW7LPR**		Nickel	0.8	04
2.4	97	4G64 (SOHC 16V)	06/96 → 10/02	**CT5KMMR11**	→ 01/01	Copper	1.1	04
2.4 i 4WD (PD4V/W)	97	4G64 (SOHC 16V)	05/95 → 05/00	**CT5KMMR11**	→ 11/98	Copper	1.1	04
LANCER								
1.3	60	4G13 (16V)	09/03 →	**CT6KMR11**		Copper	1.1	04
1.6	72	4G18	09/03 → 10/08	**CT6KMR11**	→ 06/08	Copper	1.1	04
1.6 (CS3A)	72	4G18	09/03 →	**CT6KMR11**		Copper	1.1	04
LANCER III								
1.5 12V (C12V)	66	4G15 (12V)	09/90 → 12/91	**CT6FMR**		Copper	0.8	04
LANCER IV								
1.3 (C61A)	44	4G13 (8V)	04/88 → 05/92	**CT6FMR**		Copper	0.8	04
1.5 (C62A)	62	4G15 (12V)	04/88 → 05/92	**CT6KMR11**		Copper	1.1	04
1.6 16V (C76A, C66A)	83	4G92 (SOHC 16V)	06/92 → 05/94	**CT6KMR11**		Copper	1.1	04
1.6 4WD (C76A, C66A)	84	4G92 (SOHC 16V)	06/92 → 11/93	**CT6KMR11**		Copper	1.1	04
1.6 GTi (C63A)	91	4G61	05/88 → 05/90	**CT6FMR**		Copper	0.8	04
	91	4G61	05/88 → 05/90	**CW7LPR**		Nickel	0.8	04
1.6 i (C63A)	90	4G61	09/90 → 09/92	**CT6FMR**		Copper	0.8	04
	90	4G61	09/90 → 09/92	**CW7LPR**		Nickel	0.8	04
1.8 GTi 16V (C68A)	100	4G67	11/89 → 05/92	**CT6FMR**		Copper	0.8	04
	100	4G67	11/89 → 05/92	**CW7LPR**		Nickel	0.8	04
1.8 GTi 16V (C69A)	103	4G93 (DOHC 16V)	06/92 → 12/93	**CT6KMR11**		Copper	1.1	04
LANCER V								
1.6 (CB4A)	66	4G92 (SOHC 16V)	02/94 → 12/96	**CT5KMMR11**		Copper	1.1	04
	66	4G92 (SOHC 16V)	02/94 → 12/96	**CT6KMR11**		Copper	1.1	04
1.6 16V (CB4A)	83	4G92 (SOHC 16V)	06/92 → 12/96	**CT5KMMR11**	12/93 →	Copper	1.1	04
	83	4G92 (SOHC 16V)	06/92 → 12/96	**CT6KMR11**	12/93 →	Copper	1.1	04

	kW					CORE		QTY
MITSUBISHI								
LANCER V								
1.6 16V (CB4W)	83	4G92 (SOHC 16V)	12/92 → 10/03	**CT5KMMR11**	12/93 →	Copper	1.1	04
	83	4G92 (SOHC 16V)	12/92 → 10/03	**CT6KMR11**	12/93 →	Copper	1.1	04
1.6 16V 4WD (CD4A)	83	4G92 (SOHC 16V)	06/92 → 12/96	**CT5KMMR11**	12/93 →	Copper	1.1	04
	83	4G92 (SOHC 16V)	06/92 → 12/96	**CT6KMR11**	12/93 →	Copper	1.1	04
1.6 16V 4WD (CD4W)	83	4G92 (SOHC 16V)	12/92 → 10/03	**CT5KMMR11**	12/93 →	Copper	1.1	04
	83	4G92 (SOHC 16V)	12/92 → 10/03	**CT6KMR11**	12/93 →	Copper	1.1	04
1.6 GLX 16V (CB4A)	83	4G92 (SOHC 16V)	06/92 → 12/96	**CT5KMMR11**	12/93 →	Copper	1.1	04
	83	4G92 (SOHC 16V)	06/92 → 12/96	**CT6KMR11**	12/93 →	Copper	1.1	04
1.8 16V (CB5A)	103	4G93 (DOHC 16V)	06/92 → 12/93	**CT6KMR11**		Copper	1.1	04
LANCER VI								
1.6 16V (CK4A)	66	4G92 (SOHC 16V)	12/95 → 08/03	**CT5KMMR11**	→ 05/99	Copper	1.1	04
	66	4G92 (SOHC 16V)	12/95 → 08/03	**CT6KMR11**	→ 05/99	Copper	1.1	04
LEGNUM VI								
2.0 (EA2W)	98	4G63 (SOHC 16V)	09/00 → 10/03	**CT6KMR11**	→ 09/02	Copper	1.1	04
	100	4G63 (SOHC 16V)	09/96 → 09/00	**CT6KMR11**		Copper	1.1	04
LIBERO V								
1.6 (CB4A)	66	4G92 (SOHC 16V)	02/94 → 12/96	**CT5KMMR11**		Copper	1.1	04
	66	4G92 (SOHC 16V)	02/94 → 12/96	**CT6KMR11**		Copper	1.1	04
1.6 16V (CB4A)	83	4G92 (SOHC 16V)	06/92 → 12/96	**CT5KMMR11**	12/93 →	Copper	1.1	04
	83	4G92 (SOHC 16V)	06/92 → 12/96	**CT6KMR11**	12/93 →	Copper	1.1	04
1.6 16V 4WD (CD4A)	83	4G92 (SOHC 16V)	06/92 → 12/96	**CT5KMMR11**	12/93 →	Copper	1.1	04
	83	4G92 (SOHC 16V)	06/92 → 12/96	**CT6KMR11**	12/93 →	Copper	1.1	04
	83	4G92 (SOHC 16V)	06/92 → 12/96	**CT6KMR11**	12/93 →	Copper	1.1	04
1.6 GLX 16V (CB4A)	83	4G92 (SOHC 16V)	06/92 → 12/96	**CT5KMMR11**	12/93 →	Copper	1.1	04
	83	4G92 (SOHC 16V)	06/92 → 12/96	**CT6KMR11**	12/93 →	Copper	1.1	04
	83	4G92 (SOHC 16V)	06/92 → 12/96	**CT6KMR11**	12/93 →	Copper	1.1	04
1.8 16V (CB5A)	103	4G93 (DOHC 16V)	06/92 → 12/93	**CT6KMR11**		Copper	1.1	04
MIRAGE III								
1.6 Gti	92	4G61	06/88 → 11/91	**CT6FMR**		Copper	0.8	04
	92	4G61	06/88 → 11/91	**CW7LPR**		Nickel	0.8	04
MIRAGE V								
1600	76	4G92 (SOHC 16V)	09/00 → 09/03	**CT6KMR11**		Copper	1.1	04
1.5 16V (CJ2A)	69	4G15 (16V)	11/95 → 09/03	**CT5FMR**	→ 05/00	Copper	0.8	04
1.6 GLX 16V (CJ4A)	66	4G92 (SOHC 16V)	05/96 → 09/00	**CT5KMMR11**	→ 05/99	Copper	1.1	04
	66	4G92 (SOHC 16V)	05/96 → 09/00	**CT6KMR11**	→ 05/99	Copper	1.1	04
1600 GLX (CJ4A)	66	4G92 (SOHC 16V)	05/96 → 09/00	**CT5KMMR11**	→ 05/99	Copper	1.1	04
	66	4G92 (SOHC 16V)	05/96 → 09/00	**CT6KMR11**	→ 05/99	Copper	1.1	04
MIRAGE VI								
1.1	55	3A91	10/04 → 06/12	**CT6KHMR11**		Copper	1.1	03
1.1 LPG	55	3A91	10/04 → 06/12	**CT6KHMR11**		Copper	1.1	03
1.5	80	4A91	06/04 → 06/12	**CT6KHMR11**		Copper	1.1	04
1.5 (Z23)	77	4A91	07/06 → 06/12	**CT6KHMR11**		Copper	1.1	04
1.5 4WD	77	4A91	07/06 → 06/12	**CT6KHMR11**		Copper	1.1	04

	kW					CORE		QTY
MITSUBISHI								
MONTERO								
2.4 (V21W, V21C)	82	4G64 (12V)	04/91 → 10/99	**CT5KMMR11**		Copper	1.1	04
MONTERO CLASSIC								
3.0 ZR	132	6G72 (DOHC 24V)	08/03 →	**7LPR**		Nickel	0.8	06
	132	6G72 (DOHC 24V)	08/03 →	**CT6KMR**		Copper	0.8	06
MONTERO II								
2.4 (V41W, V21W, V21C)	82	4G64 (12V)	04/91 → 04/00	**CT5KMMR11**		Copper	1.1	04
2.4 (V21W, V21C)	82	4G64 (12V)	04/91 → 10/99	**CT5KMMR11**		Copper	1.1	04
MONTERO III								
3.0 (V73W)	125	6G72 (SOHC 24V)	10/01 → 12/06	**CT6KMR**		Copper	0.8	06
	125	6G72 (SOHC 24V)	10/01 → 12/06	**7LPR**		Nickel	0.8	06
MONTERO IO								
1.8 (H76W, H66W)	84	4G93 (SOHC 16V)	11/01 → 06/07	**CT5KMMR11**	→ 02/05	Copper	1.1	04
NIMBUS								
1.8 (N31W)	90	4G93 (SOHC 16V)	10/91 → 10/98	**CT6KMR**		Copper	0.8	04
	90	4G93 (SOHC 16V)	10/91 → 10/98	**7LPR**		Nickel	0.8	04
1.8 4WD (N41W)	90	4G93 (SOHC 16V)	10/91 → 10/98	**CT6KMR**		Copper	0.8	04
	90	4G93 (SOHC 16V)	10/91 → 10/98	**7LPR**		Nickel	0.8	04
2.0	98	4G63 (SOHC 16V)	10/98 → 12/04	**CT6KMR11**		Copper	1.1	04
	98	4G63 (SOHC 16V)	10/98 → 12/04	**CT6KMR11**		Copper	1.1	04
2.0 (N33W)	98	4G63 (SOHC 16V)	10/92 → 10/98	**CT6KMR11**		Copper	1.1	04
2.0 4WD (N43W)	98	4G63 (SOHC 16V)	10/92 → 10/98	**CT6FMR**		Copper	0.8	04
	98	4G63 (SOHC 16V)	10/92 → 10/98	**CW7LPR**		Nickel	0.8	04
2.0 GLXi (D04W)	74	4G63 (SOHC 8V)	06/88 → 04/91	**CT6FMR**		Copper	0.8	04
	74	4G63 (SOHC 8V)	06/88 → 04/91	**CW7LPR**		Nickel	0.8	04
2.0 GLXi 4WD (D08W)	74	4G63 (SOHC 8V)	06/88 → 04/91	**CT6FMR**		Copper	0.8	04
	74	4G63 (SOHC 8V)	06/88 → 04/91	**CW7LPR**		Nickel	0.8	04
2.0 i GLX 16V (N33W)	98	4G63 (SOHC 16V)	10/92 → 10/98	**CT6KMR11**		Copper	1.1	04
2.4 GDI	110	4G64 (GDI)	10/98 → 12/04	**CT5KMMR**	→ 04/02	Copper	0.8	04
	110	4G64 (GDI)	10/98 → 12/04	**CT5KMMR**	→ 04/02	Copper	0.8	04
2.4 i (N34W)	102	4G64 (SOHC 16V)	10/92 → 10/98	**CT6KMR11**	→ 05/96	Copper	1.1	04
PAJERO								
2.4 (V21W, V21C)	82	4G64 (12V)	04/91 → 10/99	**CT5KMMR11**		Copper	1.1	04
2.4 (V41W, V21W, V21C)	82	4G64 (12V)	04/91 → 04/00	**CT5KMMR11**		Copper	1.1	04
3.0 (V73W)	125	6G72 (SOHC 24V)	10/01 → 12/06	**CT6KMR**		Copper	0.8	06
3.0 ZR	132	6G72 (DOHC 24V)	08/03 →	**CT6KMR**		Copper	0.8	06
PAJERO II								
2.4 (V21W, V21C)	82	4G64 (12V)	04/91 → 10/99	**CT5KMMR11**		Copper	1.1	04
PAJERO III								
3.0 (V73W)	125	6G72 (SOHC 24V)	10/01 → 12/06	**7LPR**		Nickel	0.8	06
	125	6G72 (SOHC 24V)	10/01 → 12/06	**CT6KMR**		Copper	0.8	06

	kW					CORE		QTY
MITSUBISHI								
PAJERO CLASSIC								
3.0 ZR	132	6G72 (DOHC 24V)	08/03 →	**7LPR**		Nickel	0.8	06
	132	6G72 (DOHC 24V)	08/03 →	**CT6KMR**		Copper	0.8	06
PAJERO IO								
1.8 (H76W, H66W)	84	4G93 (SOHC 16V)	11/01 → 06/07	**CT5KMMR11**	→ 02/05	Copper	1.1	04
PAJERO MINI								
0.7	37	4A30	10/94 → 08/98	**CT7DKMR**		Copper	0.8	04
	38	4A30	10/94 → 08/12	**CT7DKMR**	→ 08/02	Copper	0.8	04
0.7 4WD	37	4A30	10/94 → 08/98	**CT7DKMR**		Copper	0.8	04
	38	4A30	10/94 → 08/12	**CT7DKMR**	→ 08/02	Copper	0.8	04
	47	4A30T	10/94 → 08/12	**CT7DKMR**	09/02 →	Copper	0.8	04
RVR								
1.8 (N11W)	85	4G93 (SOHC 16V)	06/96 → 08/99	**7LPR**		Nickel	0.8	04
	85	4G93 (SOHC 16V)	06/96 → 08/99	**CT6KMR**		Copper	0.8	04
	90	4G93 (SOHC 16V)	10/91 → 08/99	**CT6KMR11**		Copper	1.1	04
1.8 4WD (N21W)	85	4G93 (SOHC 16V)	06/96 → 08/99	**CT6KMR11**		Copper	1.1	04
	90	4G93 (SOHC 16V)	10/91 → 08/99	**CT6KMR11**		Copper	1.1	04
2.0 (N63W)	100	4G63 (SOHC 16V)	08/99 → 08/02	**CT5KMMR**		Copper	0.8	04
SAPPORO III								
2.4 (E16A)	91	4G64 (8V)	06/87 → 08/90	**CT5KMMR11**		Copper	1.1	04
SHOGUN II								
2.4 (V21W, V21C)	82	4G64 (12V)	04/91 → 10/99	**CT5KMMR11**		Copper	1.1	04
SHOGUN III								
3.0 (V73W)	125	6G72 (SOHC 24V)	10/01 → 12/06	**CT6KMR**		Copper	0.8	06
	125	6G72 (SOHC 24V)	10/01 → 12/06	**7LPR**		Nickel	0.8	06
SPACE RUNNER								
1.8 (N11W)	90	4G93 (SOHC 16V)	10/91 → 08/99	**CT6KMR11**		Copper	1.1	04
	85	4G93 (SOHC 16V)	06/96 → 08/99	**CT6KMR**		Copper	0.8	04
	85	4G93 (SOHC 16V)	06/96 → 08/99	**7LPR**		Nickel	0.8	04
1.8 4WD (N21W)	90	4G93 (SOHC 16V)	10/91 → 08/99	**CT6KMR11**		Copper	1.1	04
	85	4G93 (SOHC 16V)	06/96 → 08/99	**CT6KMR11**		Copper	1.1	04
2.0 (N63W)	100	4G63 (SOHC 16V)	08/99 → 08/02	**CT5KMMR**		Copper	0.8	04
SPACE STAR MPV								
1.3 16V (DG1A)	60	4G13 (16V)	09/00 → 12/04	**CT6KMR11**	→ 03/01	Copper	1.1	04
	61	4G13 (16V)	12/98 → 12/04	**CT5KMMR11**	→ 05/00	Copper	1.1	04
	63	4G13 (16V)	06/98 → 12/04	**CT5KMMR11**	→ 05/00	Copper	1.1	04
	63	4G13 (16V)	06/98 → 12/04	**CT6KMR11**	→ 05/00	Copper	1.1	04
1.6	72	4G92 (SOHC 16V)	04/01 → 12/04	**CT6KMR11**		Copper	1.1	04
1.6 16V (DG3A)	72	4G18	01/01 → 12/04	**CT6KMR11**		Copper	1.1	04
1.8 MPI	82	4G93 (DOHC 16V)	10/02 → 12/04	**CT5KMMR11**		Copper	1.1	04
SPACE WAGON								
1.8 (N31W)	90	4G93 (SOHC 16V)	10/91 → 10/98	**CT6KMR**		Copper	0.8	04
	90	4G93 (SOHC 16V)	10/91 → 10/98	**7LPR**		Nickel	0.8	04
1.8 4WD (N41W)	90	4G93 (SOHC 16V)	10/91 → 10/98	**CT6KMR**		Copper	0.8	04
	90	4G93 (SOHC 16V)	10/91 → 10/98	**7LPR**		Nickel	0.8	04

	kW					CORE		QTY
MITSUBISHI								
SPACE WAGON								
2.0	98	4G63 (SOHC 16V)	10/98 → 12/04	**CT6KMR11**		Copper	1.1	04
2.0 (N33W)	98	4G63 (SOHC 16V)	10/92 → 10/98	**CT6KMR11**		Copper	1.1	04
2.0 4WD (N43W)	98	4G63 (SOHC 16V)	10/92 → 10/98	**CT6FMR**		Copper	0.8	04
	98	4G63 (SOHC 16V)	10/92 → 10/98	**CW7LPR**		Nickel	0.8	04
2.0 GLXi (D04W)	74	4G63 (SOHC 8V)	06/88 → 04/91	**CW7LPR**		Nickel	0.8	04
	74	4G63 (SOHC 8V)	06/88 → 04/91	**CT6FMR**		Copper	0.8	04
2.0 GLXi 4WD (D08W)	74	4G63 (SOHC 8V)	06/88 → 04/91	**CT6FMR**		Copper	0.8	04
	74	4G63 (SOHC 8V)	06/88 → 04/91	**CW7LPR**		Nickel	0.8	04
2.0 i GLX 16V (N33W)	98	4G63 (SOHC 16V)	10/92 → 10/98	**CT6KMR11**		Copper	1.1	04
2.4 GDI	110	4G64 (GDI)	10/98 → 12/04	**CT5KMMR**	→ 04/02	Copper	0.8	04
2.4 i (N34W)	102	4G64 (SOHC 16V)	10/92 → 10/98	**CT6KMR11**	→ 05/96	Copper	1.1	04
STRADA								
2.0 (K62T)	90	4G63 (SOHC 16V)	06/96 → 12/07	**CT5KMMR11**	→ 06/01	Copper	1.1	04
2.4 4WD (K75T)	97	4G64 (SOHC 16V)	06/96 → 12/07	**CT5KMMR11**		Copper	1.1	04
TRITON Pick-up								
2.0 (K62T)	90	4G63 (SOHC 16V)	06/96 → 12/07	**CT5KMMR11**	→ 06/01	Copper	1.1	04
2.4 4WD (K75T)	97	4G64 (SOHC 16V)	06/96 → 12/07	**CT5KMMR11**		Copper	1.1	04

NISSAN								
100 NX								
1.6	66	GA16DS	03/90 → 10/94	**CT5KMMR**	→ 10/92	Copper	0.8	04
1.6 SR	75	GA16DE	09/93 → 10/94	**CT5KMMR**		Copper	0.8	04
2.0	110	SR20DE	10/90 → 10/94	**CT5KMR**		Copper	0.8	04
2.0 GTI	105	SR20DE	03/91 → 10/94	**CT5KMR**		Copper	0.8	04
ALMERA								
1.6 16V	79	QG16DE	03/06 →	**CT5KHMR11**	→ 04/10	Copper	1.1	04
ALMERA I								
1.4	64	GA14DE	09/95 → 07/00	**CT5KMMR**		Copper	0.8	04
1.4 GX,LX	55	GA14DE	09/95 → 07/00	**CT5KMMR**		Copper	0.8	04
1.4 S,GX,LX	55	GA14DE	09/95 → 03/00	**CT5KMMR**		Copper	0.8	04
1.6	73	GA16DE	09/95 → 03/00	**7LPR**		Nickel	0.8	04
	73	GA16DE	09/95 → 07/00	**CT5KMMR**		Copper	0.8	04
1.6 SLX	66	GA16DE	09/95 → 07/00	**CT5KMMR**		Copper	0.8	04
ALMERA II								
1.5	66	QG15DE	07/00 →	**CT5KMMR11**	→ 09/02	Copper	1.1	04
	72	QG15DE	10/02 →	**CT5KHMR11**		Copper	1.1	04
	77	GA15DE	03/01 →	**CT5KHMR11**		Copper	1.1	04
	77	QG15DE	03/01 →	**CT5KHMR11**		Copper	1.1	04
1.5 SE	77	QG15DE	03/01 →	**CT5KHMR11**		Copper	1.1	04
	77	GA15DE	03/01 →	**CT5KHMR11**		Copper	1.1	04
1.8	84	QG18DE	07/00 →	**CT5KMMR11**	→ 09/02	Copper	1.1	04
	85	QG18DE	10/02 →	**CT5KHMR11**		Copper	1.1	04
	94	QG18DE	01/02 →	**CT6KHMR11**		Copper	1.1	04

	kW					CORE		QTY
NISSAN								
ALMERA TINO								
1.8	84	QG18DE	08/00 →	**CT5KMMR11**	→ 09/02	Copper	1.1	04
	85	QG18DE	12/02 →	**CT5KHMR11**		Copper	1.1	04
CABSTAR								
2.0	66	Z20S	07/94 → 05/94	**CT5FMR**		Copper	0.8	04
CARAVAN								
2.0	64	Z20	05/87 → 05/97	**CT5FMR**		Copper	0.8	04
CUBE								
1.5	80	HR15DE	01/03 → 09/05	**CT5KHMR11**		Copper	1.1	04
1.5 4x4	80	HR15DE	01/03 → 09/05	**CT5KHMR11**		Copper	1.1	04
DATSUN								
2.4 i	88	KA24E	02/98 →	**CT5KMMR11**	11/01 →	Copper	1.1	04
2.4 i 4WD	98	KA24DE	03/02 →	**CT5KMMR11**		Copper	1.1	04
HIKARI II								
1.4 LX	55	GA14S	01/89 → 08/91	**CT6KMMR**		Copper	0.8	04
KUBISTAR								
1.2	44	D7F 764	08/03 → 10/09	**CT5LDMR9**		Copper	0.9	04
1.2 16V	55	D4F 712	04/06 → 10/09	**CT5LDMR9**		Copper	0.9	04
MARCH II								
1.0 i 16V	40	CG10DE	08/92 → 09/00	**CT5KMMR11**		Copper	1.1	04
	44	CG10DE	09/00 → 02/03	**CT5KMMR11**		Copper	1.1	04
1.3 i 16V	55	CG13DE	08/92 → 09/00	**CT5KMMR11**		Copper	1.1	04
1.4 i 16V	60	CGA3DE	09/00 → 02/03	**CT5KMMR11**		Copper	1.1	04
MICRA II								
1.0 i 16V	40	CG10DE	08/92 → 09/00	**CT5KMMR11**		Copper	1.1	04
	44	CG10DE	09/00 → 02/03	**CT5KMMR11**		Copper	1.1	04
1.3 i 16V	55	CG13DE	08/92 → 09/00	**CT5KMMR11**		Copper	1.1	04
1.4 i 16V	60	CGA3DE	09/00 → 02/03	**CT5KMMR11**		Copper	1.1	04
NAVARA								
2.4 i	88	KA24E	02/98 →	**CT5KMMR11**	11/01 →	Copper	1.1	04
2.4 i 4WD	98	KA24DE	03/02 →	**CT5KMMR11**		Copper	1.1	04
NOMAD								
2.0	66	Z20S	07/87 → 08/94	**CW7LPR**	→ 01/90	Nickel	0.8	04
	66	Z20S	07/87 → 08/94	**CT5FMR**	→ 01/90	Copper	0.8	04
NX/NXR								
1.6	66	GA16DS	03/90 → 10/94	**CT5KMMR**	→ 10/92	Copper	0.8	04
1.6 SR	75	GA16DE	09/93 → 10/94	**CT5KMMR**		Copper	0.8	04
2.0	110	SR20DE	10/90 → 10/94	**CT5KMR**		Copper	0.8	04
2.0 GTI	105	SR20DE	03/91 → 10/94	**CT5KMR**		Copper	0.8	04
PATHFINDER I								
2.4 i 4WD	76	Z24i	10/87 → 02/93	**CT5FMR**		Copper	0.8	04
PATROL GR IV								
4.2 Cat	121	TB42E	11/88 → 02/98	**CT5FMR**		Copper	0.8	06
PATROL IV								
4.2 Cat	121	TB42E	11/88 → 02/98	**CT5FMR**		Copper	0.8	06

	kW					CORE		QTY
NISSAN								
PICK UP								
2.4 i	88	KA24E	02/98 →	**CT5KMMR11**	11/01 →	Copper	1.1	04
2.4 i 4WD	98	KA24DE	03/02 →	**CT5KMMR11**		Copper	1.1	04
PRIMERA								
1.6	66	GA16DS	06/90 → 01/96	**CT6KMR**		Copper	0.8	04
	66	GA16DS	06/90 → 01/96	**7LPR**		Nickel	0.8	04
	71	GA16DS	06/90 → 01/96	**CT6KMR**		Copper	0.8	04
	71	GA16DS	06/90 → 01/96	**7LPR**		Nickel	0.8	04
	75	GA16DE	06/93 → 01/96	**7LPR**		Nickel	0.8	04
	75	GA16DE	06/93 → 01/96	**CT6KMR**		Copper	0.8	04
	78	QG16DE	03/02 →	**CT5KHMR11**		Copper	1.1	04
	80	QG16DE	01/02 →	**CT5KHMR11**	→ 01/06	Copper	1.1	04
1.6 16V	66	GA16DE	09/96 → 12/01	**CT5KMMR**		Copper	0.8	04
	73	GA16DE	09/96 → 10/00	**CT5KMMR**		Copper	0.8	04
	78	QG16DE	06/96 → 12/01	**CT5KHMR11**		Copper	1.1	04
1.8	85	QG18DE	03/02 →	**CT5KHMR11**	→ 01/06	Copper	1.1	04
1.8 16V	84	QG18DE	08/99 → 12/01	**CT5KMMR11**		Copper	1.1	04
2.0	103	QR20DE	07/02 →	**CT5KHMR11**	→ 08/04	Copper	1.1	04
	103	QR20DE	03/02 →	**CT5KHMR11**	→ 01/06	Copper	1.1	04
2.0 16V	85	SR20DI	06/90 → 01/96	**CT5KMR**		Copper	0.8	04
	85	SR20De	09/96 → 12/01	**CT5KMR11**		Copper	1.1	04
2.0 16V 4x4	85	SR20DI	04/91 → 06/96	**CT5KMR**		Copper	0.8	04
2.0 GT	110	SR20DE	06/90 → 01/96	**CT6KMR**		Copper	0.8	04
	110	SR20DE	06/90 → 01/96	**7LPR**		Nickel	0.8	04
2.0 i	85	SR20DI	07/90 → 03/98	**CT5KMR**		Copper	0.8	04
2.5	125	QR25DE	01/02 →	**CT5KHMR11**		Copper	1.1	04
PULSAR I								
1.4	64	GA14DE	09/95 → 07/00	**CT5KMMR**		Copper	0.8	04
1.4 GX,LX	55	GA14DE	09/95 → 07/00	**CT5KMMR**		Copper	0.8	04
1.6	73	GA16DE	09/95 → 03/00	**7LPR**		Nickel	0.8	04
	73	GA16DE	09/95 → 07/00	**CT5KMMR**		Copper	0.8	04
1.6 SLX	66	GA16DE	09/95 → 07/00	**CT5KMMR**		Copper	0.8	04
1.6 SR,SLX	66	GA16DE	09/95 → 03/00	**CT5KMMR**		Copper	0.8	04
PULSAR II								
1.4 LX	55	GA14S	10/88 → 08/91	**CT6KMMR**		Copper	0.8	04
1.5	66	QG15DE	07/00 →	**CT5KMMR11**	→ 09/02	Copper	1.1	04
	72	QG15DE	10/02 →	**CT5KHMR11**		Copper	1.1	04
	77	QG15DE	03/01 →	**CT5KHMR11**		Copper	1.1	04
1.5 SE	77	QG15DE	03/01 →	**CT5KHMR11**		Copper	1.1	04
1.8	84	QG18DE	07/00 →	**CT5KMMR11**	→ 09/02	Copper	1.1	04
	85	QG18DE	10/02 →	**CT5KHMR11**		Copper	1.1	04
	94	QG18DE	01/02 →	**CT6KHMR11**		Copper	1.1	04

	kW					CORE		QTY
NISSAN								
PULSAR III								
1.4 i	55	GA14DS	10/90 → 05/95	**CT6KMR**		Copper	0.8	04
	55	GA14DE	10/90 → 05/95	**CT6KMR**		Copper	0.8	04
	55	GA14DS	10/90 → 05/95	**7LPR**		Nickel	0.8	04
	55	GA14DE	10/90 → 05/95	**7LPR**		Nickel	0.8	04
1.4 i 16V	64	GA14DE	10/90 → 06/95	**CT5KMMR**		Copper	0.8	04
1.6 i	66	GA16DE	10/90 → 05/95	**CT6KMR**		Copper	0.8	04
	66	GA16DE	10/90 → 05/95	**7LPR**		Nickel	0.8	04
	66	GA16DEL	10/90 → 05/95	**7LPR**		Nickel	0.8	04
	66	GA16DEL	10/90 → 05/95	**CT6KMR**		Copper	0.8	04
	66	GA16DS	10/90 → 05/95	**CT6KMR**		Copper	0.8	04
	66	GA16DS	10/90 → 05/95	**7LPR**		Nickel	0.8	04
1.6 i 16V	75	GA16DE	10/92 → 05/95	**CT5KMMR**		Copper	0.8	04
1.6 i 16V 4WD	66	GA16DS	10/90 → 05/95	**7LPR**		Nickel	0.8	04
	66	GA16DS	10/90 → 05/95	**CT6KMR**		Copper	0.8	04
PULSAR IV								
1.4 LX	55	GA14S	01/89 → 08/91	**CT6KMMR**		Copper	0.8	04
PULSAR V								
1.4 i	55	GA14DS	10/90 → 05/95	**7LPR**		Nickel	0.8	04
	55	GA14DE	10/90 → 05/95	**7LPR**		Nickel	0.8	04
	55	GA14DE	10/90 → 05/95	**CT6KMR**		Copper	0.8	04
	55	GA14DS	10/90 → 05/95	**CT6KMR**		Copper	0.8	04
1.4 i 16V	64	GA14DE	10/90 → 06/95	**CT5KMMR**		Copper	0.8	04
1.6 i	66	GA16DEL	10/90 → 05/95	**7LPR**		Nickel	0.8	04
	66	GA16DE	10/90 → 05/95	**7LPR**		Nickel	0.8	04
	66	GA16DS	10/90 → 05/95	**7LPR**		Nickel	0.8	04
	66	GA16DS	10/90 → 05/95	**CT6KMR**		Copper	0.8	04
	66	GA16DE	10/90 → 05/95	**CT6KMR**		Copper	0.8	04
	66	GA16DEL	10/90 → 05/95	**CT6KMR**		Copper	0.8	04
1.6 i 16V	75	GA16DE	10/92 → 05/95	**CT5KMMR**		Copper	0.8	04
1.6 i 16V 4WD	66	GA16DS	10/90 → 05/95	**CT6KMR**		Copper	0.8	04
PULSAR VI								
1.4	64	GA14DE	09/95 → 03/00	**CT5KMMR**		Copper	0.8	04
1.6	73	GA16DE	09/95 → 03/00	**CT6KMR**		Copper	0.8	04
	73	GA16DE	09/95 → 03/00	**7LPR**		Nickel	0.8	04
1.6 SR,SLX	66	GA16DE	09/95 → 03/00	**CT5KMMR**		Copper	0.8	04
PULSAR VII								
1.5	72	QG15DE	10/02 →	**CT5KHMR11**		Copper	1.1	04
	66	QG15DE	03/00 →	**CT5KMMR11**	→ 09/02	Copper	1.1	04
	77	QG15DE	03/01 →	**CT5KHMR11**		Copper	1.1	04
1.5 SE	77	QG15DE	03/01 →	**CT5KHMR11**		Copper	1.1	04
1.5 XL	77	QG15DE	03/01 →	**CT5KHMR11**		Copper	1.1	04
1.8	85	QG18DE	10/02 →	**CT5KHMR11**		Copper	1.1	04
	84	QG18DE	01/00 →	**CT5KMMR11**	→ 09/02	Copper	1.1	04
	94	QG18DE	01/02 →	**CT6KHMR11**		Copper	1.1	04

	kW					CORE		QTY
NISSAN								
Q BIC III								
1.6 L	75	GA16DE	11/92 → 04/96	**CT5KMMR**		Copper	0.8	04
1.6 i 16V	66	GA16DE	10/92 → 03/00	**CT5KMMR**		Copper	0.8	04
SABRE III								
1.4 i	55	GA14DS	10/90 → 05/95	**7LPR**		Nickel	0.8	04
	55	GA14DE	10/90 → 05/95	**7LPR**		Nickel	0.8	04
	55	GA14DS	10/90 → 05/95	**CT6KMR**		Copper	0.8	04
	55	GA14DE	10/90 → 05/95	**CT6KMR**		Copper	0.8	04
1.4 i 16V	64	GA14DE	10/90 → 05/95	**CT5KMMR**		Copper	0.8	04
1.6 i	66	GA16DE	10/90 → 05/95	**7LPR**		Nickel	0.8	04
	66	GA16DE	10/90 → 05/95	**CT6KMR**		Copper	0.8	04
	66	GA16DEL	10/90 → 05/95	**7LPR**		Nickel	0.8	04
	66	GA16DEL	10/90 → 05/95	**CT6KMR**		Copper	0.8	04
	66	GA16DS	10/90 → 05/95	**7LPR**		Nickel	0.8	04
	66	GA16DS	10/90 → 05/95	**CT6KMR**		Copper	0.8	04
1.6 i 16V	75	GA16DE	10/92 → 05/95	**CT5KMMR**		Copper	0.8	04
SAFARI IV								
4.2 Cat	121	TB42E	11/88 → 02/98	**CT5FMR**		Copper	0.8	06
SENTRA I								
1.4	64	GA14DE	09/95 → 07/00	**CT5KMMR**		Copper	0.8	04
1.4 GX,LX	55	GA14DE	09/95 → 07/00	**CT5KMMR**		Copper	0.8	04
1.5	77	QG15DE	08/00 → 08/05	**CT5KMMR11**		Copper	1.1	04
1.6	73	GA16DE	09/95 → 07/00	**CT5KMMR**		Copper	0.8	04
1.6 SLX	66	GA16DE	09/95 → 07/00	**CT5KMMR**		Copper	0.8	04
SENTRA II								
1.4 LX	55	GA14S	10/88 → 08/91	**CT6KMMR**		Copper	0.8	04
1.5	72	QG15DE	10/02 →	**CT5KHMR11**		Copper	1.1	04
	66	QG15DE	03/00 →	**CT5KMMR11**	→ 09/02	Copper	1.1	04
1.5 XL	77	QG15DE	03/01 →	**CT5KHMR11**		Copper	1.1	04
1.8	84	QG18DE	01/00 →	**CT5KMMR11**	→ 09/02	Copper	1.1	04
	85	QG18DE	10/02 →	**CT5KHMR11**		Copper	1.1	04
	94	QG18DE	08/02 →	**CT6KHMR11**		Copper	1.1	04
SENTRA III								
1.4 i	55	GA14DE	10/90 → 05/95	**CT6KMR**		Copper	0.8	04
	55	GA14DS	10/90 → 05/95	**7LPR**		Nickel	0.8	04
	55	GA14DE	10/90 → 05/95	**7LPR**		Nickel	0.8	04
	55	GA14DS	10/90 → 05/95	**CT6KMR**		Copper	0.8	04
1.4 i 16V	64	GA14DE	10/90 → 06/95	**CT5KMMR**		Copper	0.8	04
1.6 i	66	GA16DS	10/90 → 05/95	**7LPR**		Nickel	0.8	04
	66	GA16DEL	10/90 → 05/95	**7LPR**		Nickel	0.8	04
	66	GA16DE	10/90 → 05/95	**7LPR**		Nickel	0.8	04
	66	GA16DS	10/90 → 05/95	**CT6KMR**		Copper	0.8	04
	66	GA16DEL	10/90 → 05/95	**CT6KMR**		Copper	0.8	04
	66	GA16DE	10/90 → 05/95	**CT6KMR**		Copper	0.8	04
1.6 i 16V	75	GA16DE	10/92 → 05/95	**CT5KMMR**		Copper	0.8	04

	kW					CORE		QTY
NISSAN								
SENTRA III								
1.6 i 16V 4WD	66	GA16DS	10/90 → 05/95	**7LPR**		Nickel	0.8	04
	66	GA16DS	10/90 → 05/95	**CT6KMR**		Copper	0.8	04
SENTRA V								
2.5	129	QR25DE	06/02 →	**CT5KHMR11**		Copper	1.1	04
SERENA								
1.6	71	GA16DE	02/93 → 09/01	**CT5KMMR**		Copper	0.8	04
SUNNY I								
1.5	77	QG15DE	08/00 → 08/05	**CT5KMMR11**		Copper	1.1	04
SUNNY II								
1.4 LX	55	GA14S	10/88 → 08/91	**CT6KMMR**		Copper	0.8	04
1.5	66	QG15DE	07/00 →	**CT5KMMR11**	→ 09/02	Copper	1.1	04
	72	QG15DE	10/02 →	**CT5KHMR11**		Copper	1.1	04
	77	GA15DE	03/01 →	**CT5KHMR11**		Copper	1.1	04
	77	QG15DE	03/01 →	**CT5KHMR11**		Copper	1.1	04
1.5 SE	77	GA15DE	03/01 →	**CT5KHMR11**		Copper	1.1	04
	77	QG15DE	03/01 →	**CT5KHMR11**		Copper	1.1	04
1.8	84	QG18DE	07/00 →	**CT5KMMR11**	→ 09/02	Copper	1.1	04
	85	QG18DE	10/02 →	**CT5KHMR11**		Copper	1.1	04
	94	QG18DE	01/02 →	**CT6KHMR11**		Copper	1.1	04
SUNNY III								
1.4 i	55	GA14DS	10/90 → 05/95	**CT6KMR**		Copper	0.8	04
	55	GA14DE	10/90 → 05/95	**CT6KMR**		Copper	0.8	04
	55	GA14DS	10/90 → 05/95	**7LPR**		Nickel	0.8	04
	55	GA14DE	10/90 → 05/95	**7LPR**		Nickel	0.8	04
1.4 i 16V	64	GA14DE	10/90 → 06/95	**CT5KMMR**		Copper	0.8	04
1.6 i	66	GA16DEL	10/90 → 05/95	**CT6KMR**		Copper	0.8	04
	66	GA16DE	10/90 → 05/95	**CT6KMR**		Copper	0.8	04
	66	GA16DS	10/90 → 05/95	**CT6KMR**		Copper	0.8	04
	66	GA16DEL	10/90 → 05/95	**7LPR**		Nickel	0.8	04
	66	GA16DE	10/90 → 05/95	**7LPR**		Nickel	0.8	04
	66	GA16DS	10/90 → 05/95	**7LPR**		Nickel	0.8	04
1.6 i 16V	75	GA16DE	10/92 → 05/95	**CT5KMMR**		Copper	0.8	04
1.6 i 16V 4WD	66	GA16DS	10/90 → 05/95	**CT6KMR**		Copper	0.8	04
	66	GA16DS	10/90 → 05/95	**7LPR**		Nickel	0.8	04
TERRANO I								
2.4 i 4WD	76	Z24i	10/87 → 02/93	**CT5FMR**		Copper	0.8	04
TINO								
1.8	84	QG18DE	08/00 →	**CT5KMMR11**	→ 09/02	Copper	1.1	04
	85	QG18DE	12/02 →	**CT5KHMR11**		Copper	1.1	04
TSUBAME								
1.5	66	QG15DE	05/99 → 08/04	**CT5KMMR11**		Copper	1.1	04

	kW					CORE		QTY
NISSAN								
TSUBAME III								
1.6	75	GA16DE	07/95 →	**CT5KMMR**		Copper	0.8	04
1.6 i	66	GA16DE	06/91 → 03/00	**CT6KMR**		Copper	0.8	04
	66	GA16DS	06/91 → 03/00	**CT6KMR**		Copper	0.8	04
	66	GA16DE	06/91 → 03/00	**7LPR**		Nickel	0.8	04
	66	GA16DS	06/91 → 03/00	**7LPR**		Nickel	0.8	04
1.6 i 16V 4x4	75	GA16DE	10/92 → 03/00	**CT6KMR**		Copper	0.8	04
	75	GA16DE	10/92 → 03/00	**7LPR**		Nickel	0.8	04
URVAN								
2.0	64	Z20	05/87 → 05/97	**CT5FMR**		Copper	0.8	04
VANETTE								
2.0	66	Z20S	07/87 → 08/94	**CW7LPR**	→ 01/90	Nickel	0.8	04
	66	Z20S	07/87 → 08/94	**CT5FMR**	→ 01/90	Copper	0.8	04
VANETTE CARGO								
1.6 i	71	GA16DE	01/95 →	**CT5KMMR**	→ 11/01	Copper	0.8	04
	72	GA16DE	01/96 →	**CT5KMMR**	→ 11/01	Copper	0.8	04
VANETTE SERENA								
1.6	71	GA16DE	02/93 → 09/01	**CT5KMMR**		Copper	0.8	04
X-TRAIL								
2.0	103	QR20DE	07/01 →	**CT5KHMR11**	→ 03/07	Copper	1.1	04
	110	QR20DE	09/01 →	**CT6KHMR11**	→ 03/07	Copper	1.1	04
2.0 4x4	103	QR20DE	07/01 →	**CT5KHMR11**		Copper	1.1	04
	110	QR20DE	09/01 →	**CT6KHMR11**	→ 03/07	Copper	1.1	04
2.5 4x4	121	QR25DE	09/02 →	**CT5KHMR11**	→ 03/07	Copper	1.1	04
	124	QR25DE	06/07 →	**CT5KHMR11**	10/09 →	Copper	1.1	04
	132	QR25DE	11/02 →	**CT6KHMR11**	→ 03/07	Copper	1.1	04
2.5 GX	121	QR25DE	09/02 →	**CT5KHMR11**	→ 03/07	Copper	1.1	04

OPEL								
AGILA (A)								
1.0	44	Z 10 XEP	08/03 → 12/07	**A5KMR**		Copper	1.1	03
1.0 12V	43	Z 10 XE	09/00 → 12/07	**D6KMR**		Copper	0.9	03
1.2 16V	55	Z 12 XE	09/00 → 12/07	**D6KMR**		Copper	0.9	04
1.2 16V Twinport	59	Z 12 XEP	07/04 → 12/07	**A5KMR**		Copper	1.1	04
ANTARA								
2.4	103	Z 24 XE	09/08 →	**D6KMR**	→ 02/11	Copper	0.9	04
	104	Z 24 XED	05/06 →	**D6KMR**		Copper	0.9	04
2.4 4x4	103	Z 24 XE	01/07 →	**D6KMR**	→ 02/11	Copper	0.9	04
ASCONA C								
1.6 i	55	E 16 LZ	09/87 → 08/88	**CT5FMR**		Copper	0.8	04
	55	E 16 NZ	09/87 → 08/88	**CT5FMR**		Copper	0.8	04
1.8	62	E 18 NV	09/87 → 08/88	**CW7LPR**		Nickel	0.8	04
	62	E 18 NV	09/87 → 08/88	**CT6FMR**		Copper	0.8	04
2.0 i	74	C 20 NEF	08/87 → 08/88	**CW7LPR**		Nickel	0.8	04
	74	C 20 NEF	08/87 → 08/88	**CT6FMR**		Copper	0.8	04

	kW					CORE		QTY
OPEL								
ASCONA C								
2.0 i GT	95	20 SEH	03/87 → 08/88	**CW7LPR**		Nickel	0.8	04
	95	20 SEH	03/87 → 08/88	**CT6FMR**		Copper	0.8	04
ASTRA A+								
1.6	85	Z 16 XER	02/07 →	**A5KMR**		Copper	1.1	04
1.8	103	A 18 XER	02/07 →	**A5KMR**		Copper	1.1	04
	103	Z 18 XER	02/07 →	**A5KMR**		Copper	1.1	04
ASTRA F								
1.4	55	14 NV	09/91 → 09/93	**D6KMR**		Copper	0.9	04
	55	14 NV	09/91 → 09/93	**CT6FMR**		Copper	0.8	04
	55	14 NV	09/91 → 09/93	**CW7LPR**		Nickel	0.8	04
	60	14 SE	09/92 → 09/98	**D6KMR**		Copper	0.9	04
	60	14 SE	09/92 → 09/98	**CW7LPR**		Nickel	0.8	04
1.4 i	44	X 14 NZ	01/98 → 08/02	**D6KMR**		Copper	0.9	04
	44	C 14 NZ	09/91 → 01/98	**CT6FMR**		Copper	0.8	04
	44	C 14 NZ	09/91 → 09/98	**CW7LPR**		Nickel	0.8	04
	44	X 14 NZ	09/91 → 09/98	**CW7LPR**		Nickel	0.8	04
1.4 i 16V	66	X 14 XE	02/96 → 09/98	**D6KMR**		Copper	0.9	04
1.4 Si	60	C 14 SE	03/92 → 09/98	**CT6FMR**		Copper	0.8	04
	60	C 14 SE	03/92 → 09/98	**CW7LPR**		Nickel	0.8	04
1.6	55	16 NZR	09/95 → 09/98	**D6KMR**		Copper	0.9	04
	55	16 LZ2	09/95 → 09/98	**D6KMR**		Copper	0.9	04
1.6 i	52	X 16 SZ	05/93 → 07/96	**D6KMR**		Copper	0.9	04
	52	X 16 SZ	05/93 → 07/96	**CT6FMR**		Copper	0.8	04
	52	X 16 SZ	05/93 → 07/96	**CW7LPR**		Nickel	0.8	04
	55	X 16 SZR	03/92 → 09/98	**D6KMR**		Copper	0.9	04
	55	C 16 NZ	03/92 → 09/98	**D6KMR**		Copper	0.9	04
	55	C 16 NZ	03/92 → 09/98	**CT6FMR**		Copper	0.8	04
	55	X 16 SZR	03/92 → 09/98	**CT6FMR**		Copper	0.8	04
	55	C 16 NZ	03/92 → 09/98	**CW7LPR**		Nickel	0.8	04
	55	X 16 SZR	03/92 → 09/98	**CW7LPR**		Nickel	0.8	04
1.6 i 16V	74	X 16 XEL	08/94 → 09/98	**D6KMR**		Copper	0.9	04
1.6 Si	74	C 16 SE	05/92 → 12/94	**CT6FMR**		Copper	0.8	04
	74	C 16 SE	05/92 → 12/94	**CW7LPR**		Nickel	0.8	04
1.8 i	66	C 18 NZ	03/92 → 09/98	**D6KMR**		Copper	0.9	04
	66	C 18 NZ	03/92 → 09/98	**CT6FMR**		Copper	0.8	04
	66	C 18 NZ	03/92 → 09/98	**CW7LPR**		Nickel	0.8	04
1.8 i 16V1.8 i 16V	82	18 SE	09/95 → 09/96	**D6KMR**		Copper	0.9	04
	85	C 18 XEL	11/94 → 09/98	**D6KMR**		Copper	0.9	04
	85	X 18 XE	11/94 → 09/98	**D6KMR**		Copper	0.9	04
	92	C 18 XE	06/93 → 10/94	**D6KMR**		Copper	0.9	04
2.0 GSI 16V	110	C 20 XE	09/91 → 01/98	**D6KMR**		Copper	0.9	04
2.0 i	85	C 20 NE	03/92 → 09/98	**D6KMR**		Copper	0.9	04
	85	C 20 NE	03/92 → 09/98	**CT6FMR**		Copper	0.8	04
	85	C 20 NE	03/92 → 09/98	**CW7LPR**		Nickel	0.8	04

	kW					CORE		QTY
OPEL								
ASTRA F								
2.0 i 16V	100	X 20 XEV	02/95 → 01/98	**CT6FMR**		Copper	0.8	04
	100	X 20 XEV	02/95 → 09/98	**D6KMR**		Copper	0.9	04
	110	C 20 XE	03/93 → 01/98	**CT6FMR**		Copper	0.8	04
ASTRA G								
1.2 16V	48	X 12 XE	02/98 → 09/00	**D6KMR**		Copper	0.9	04
	55	Z 12 XE	09/00 → 01/05	**D6KMR**		Copper	0.9	04
1.4	66	Z 14 XEP	09/07 → 12/09	**D6KMR**		Copper	0.9	04
1.4 16V	66	X 14 XE	02/98 → 01/05	**D6KMR**		Copper	0.9	04
	66	X 14 XE	02/98 → 01/05	**A5KMR**		Copper	1.1	04
1.6	55	X 16 SZR	02/98 → 09/00	**D6KMR**		Copper	0.9	04
	62	Z 16 SE	09/00 → 01/05	**D6KMR**		Copper	0.9	04
	76	Z 16 XEP	12/02 → 12/09	**D6KMR**		Copper	0.9	04
	76	Z 16 XEP	01/03 → 10/05	**A5KMR**		Copper	1.1	04
1.6 16V	74	X 16 XEL	02/98 → 01/05	**D6KMR**		Copper	0.9	04
	74	Z 16 XE	02/98 → 01/05	**D6KMR**		Copper	0.9	04
	74	C 16 SEL	02/98 → 01/05	**D6KMR**		Copper	0.9	04
	76	Z 16 XEP	03/00 → 05/05	**D6KMR**		Copper	0.9	04
1.8 16V	85	X 18 XE1	02/98 → 09/00	**D6KMR**		Copper	0.9	04
	92	Z 18 XE	09/00 → 01/05	**D6KMR**		Copper	0.9	04
2.0 16V	100	C 20 SEL	02/98 → 01/05	**D6KMR**		Copper	0.9	04
	100	X 20 XEV	02/98 → 01/05	**D6KMR**		Copper	0.9	04
2.0 16V OPC	118	X 20 XER	11/99 → 09/02	**D6KMR**		Copper	0.9	04
2.0 16V Turbo	147	Z 20 LET	11/02 → 10/05	**D6KMR**		Copper	0.9	04
	140	Z 20 LET	09/00 → 08/01	**D6KMR**		Copper	0.9	04
2.0 OPC	141	Z 20 LET	09/02 → 01/05	**D6KMR**		Copper	0.9	04
	147	Z 20 LET	11/02 → 01/05	**D6KMR**		Copper	0.9	04
ASTRA H								
1.2	59	Z 12 XEP	08/05 →	**A5KMR**		Copper	1.1	04
1.4	55	Z 14 XEL	04/04 → 10/04	**A5KMR**		Copper	1.1	04
	55	Z 14 XEL	03/05 →	**A5KMR**	→ 09/10	Copper	1.1	04
	55	Z 14 XEL	08/04 →	**A5KMR**	→ 07/05	Copper	1.1	04
	59	Z 14 XEL	04/04 → 10/04	**A5KMR**		Copper	1.1	04
	66	Z 14 XEP	03/04 →	**A5KMR**		Copper	1.1	04
1.6	85	Z 16 XER	12/07 →	**A5KMR**		Copper	1.1	04
	85	A 16 XER	12/07 →	**A5KMR**		Copper	1.1	04
1.6 LPG	85	Z 16 XER	08/09 →	**A5KMR**		Copper	1.1	04
1.6 Turbo	132	Z 16 LET	02/07 →	**A5KMR**		Copper	1.1	04
1.8	92	Z 18 XE	03/04 →	**A5KMR**		Copper	1.1	04
	103	A 18 XER	01/06 →	**A5KMR**		Copper	1.1	04
	103	Z 18 XER	01/06 →	**A5KMR**		Copper	1.1	04
2.0 Turbo	125	Z 20 LEL	03/04 →	**A5KMR**		Copper	1.1	04
	147	Z 20 LER	09/04 →	**A5KMR**		Copper	1.1	04

	kW					CORE		QTY
OPEL								
CALIBRA A								
2.0 i	85	C 20 NE	06/90 → 07/97	**D6KMR**	07/93 →	Copper	0.9	04
	85	C 20 NE	06/90 → 07/97	**CT5FMR**	07/93 →	Copper	0.8	04
2.0 i 16V	100	X 20 XEV	02/94 → 07/97	**D6KMR**		Copper	0.9	04
	110	C 20 XE	06/90 → 02/94	**D6KMR**		Copper	0.9	04
2.0 i 16V 4x4	100	X 20 XEV	02/94 → 07/97	**D6KMR**		Copper	0.9	04
	110	C 20 XE	06/90 → 02/94	**D6KMR**		Copper	0.9	04
2.0 i 4x4	85	C 20 NE	06/90 → 07/97	**D6KMR**	07/93 →	Copper	0.9	04
	85	C 20 NE	06/90 → 07/97	**CT5FMR**	07/93 →	Copper	0.8	04
2.5 i V6	125	X 25 XE	04/93 → 07/97	**D6KMR**		Copper	0.9	06
	125	C 25 XE	04/93 → 07/97	**D6KMR**		Copper	0.9	06
COMBO								
1.2	33	X 12 SZ	07/94 → 10/01	**D6KMR**		Copper	0.9	04
	33	C 12 NZ	07/94 → 10/01	**CT5FMR**		Copper	0.8	04
1.4	44	C 14 NZ	07/94 → 10/01	**D6KMR**		Copper	0.9	04
	44	X 14 SZ	07/94 → 10/01	**D6KMR**		Copper	0.9	04
	60	C 14 SE	07/94 → 10/01	**D6KMR**		Copper	0.9	04
	66	Z 14 XEP	10/04 →	**A5KMR**		Copper	1.1	04
	70	A 14 FP	02/12 →	**CT7DKMR**		Copper	0.8	04
	88	A 14 FC	02/12 →	**CT7DKMR**		Copper	0.8	04
1.4 16V	66	X 14 XE	08/99 → 10/01	**D6KMR**		Copper	0.9	04
1.6	64	Z 16 SE	10/01 →	**D6KMR**		Copper	0.9	04
CORSA A								
1.2 i	33	C 12 NZ	09/89 → 03/93	**D6KMR**		Copper	0.9	04
1.2 N	38	12 NV	01/90 → 03/93	**CT5FMR**		Copper	0.8	04
1.4 i	44	C 14 NZ	01/90 → 03/93	**D6KMR**		Copper	0.9	04
1.4 S	53	14 NV	01/90 → 03/93	**CW7LPR**		Nickel	0.8	04
	53	14 NV	09/89 → 03/93	**CT6FMR**		Copper	0.8	04
1.4 Si	60	C 14 SE	09/91 → 03/93	**D6KMR**		Copper	0.9	04
1.6 GSI	72	C 16 SEI	09/89 → 03/93	**CT6FMR**		Copper	0.8	04
	55	C 16 NZ	08/88 → 09/92	**CW7LPR**		Nickel	0.8	04
	72	C 16 SEI	09/89 → 03/93	**CW7LPR**		Nickel	0.8	04
	74	E 16 SE	05/88 → 03/92	**CW7LPR**		Nickel	0.8	04
	74	E 16 SE	05/88 → 03/92	**CT6FMR**		Copper	0.8	04
	55	C 16 NZ	08/88 → 09/92	**CT6FMR**		Copper	0.8	04
1.6 GSI Cat	74	C 16 SE	02/92 → 03/93	**CW7LPR**		Nickel	0.8	04
	74	C 16 SE	02/92 → 03/93	**CT6FMR**		Copper	0.8	04
CORSA B								
1.0 i 12V	40	X 10 XE	11/96 → 09/00	**D6KMR**		Copper	0.9	03
1.2 i	33	12 NZ	03/93 → 09/00	**D6KMR**		Copper	0.9	04
	33	C 12 NZ	03/93 → 09/00	**D6KMR**		Copper	0.9	04
	33	X 12 SZ	03/93 → 09/00	**D6KMR**		Copper	0.9	04
	33	12 NZ	03/93 → 09/00	**CT5FMR**		Copper	0.8	04
	33	X 12 SZ	03/93 → 09/00	**CT5FMR**		Copper	0.8	04
	33	C 12 NZ	03/93 → 09/00	**CT5FMR**		Copper	0.8	04

	kW					CORE		QTY
OPEL								
CORSA B								
1.2 i 16V	48	X 12 XE	03/98 → 09/00	**D6KMR**		Copper	0.9	04
1.4 i	40	X 14 SZ	03/93 → 09/00	**D6KMR**	08/95 →	Copper	0.9	04
	40	C 14 NZ	03/93 → 09/00	**D6KMR**	08/95 →	Copper	0.9	04
	40	C 14 NZ	03/93 → 09/00	**CT5FMR**	08/95 →	Copper	0.8	04
	40	X 14 SZ	03/93 → 09/00	**CT5FMR**	08/95 →	Copper	0.8	04
	44	C 14 NZ	03/93 → 09/00	**D6KMR**	08/95 →	Copper	0.9	04
	44	X 14 SZ	03/93 → 09/00	**CT5FMR**	08/95 →	Copper	0.8	04
1.4 i 16V	66	X 14 XE	01/99 →	**D6KMR**		Copper	0.9	04
	63	C 14 SEL	08/97 → 09/00	**D6KMR**		Copper	0.9	04
	66	X 14 XE	09/94 → 09/00	**D6KMR**		Copper	0.9	04
	67	X 14 XE	09/94 → 09/00	**YJT6KMR**	→ 08/99	Copper	1.0	04
1.4 Si	60	C 14 SE	03/93 → 09/00	**D6KMR**		Copper	0.9	04
	60	C 14 SE	03/93 → 09/00	**CT5FMR**		Copper	0.8	04
1.6 GSI 16V	80	C 16 XE	03/93 → 09/00	**D6KMR**		Copper	0.9	04
1.6 i 16V	74	C 16 SEL	08/97 → 09/00	**D6KMR**		Copper	0.9	04
	78	X 16 XE	09/94 → 09/00	**D6KMR**		Copper	0.9	04
CORSA C								
1.0	43	Z 10 XE	09/00 → 06/03	**D6KMR**		Copper	0.9	03
	44	Z 10 XEP	06/03 → 12/09	**A5KMR**		Copper	1.1	03
1.2	55	Z 12 XE	09/00 → 12/09	**D6KMR**		Copper	0.9	04
1.2 Twinport	59	Z 12 XEP	07/04 → 12/09	**A5KMR**		Copper	1.1	04
1.4	66	Z 14 XE	09/00 → 12/09	**D6KMR**		Copper	0.9	04
1.4 Twinport	66	Z 14 XEP	06/03 → 12/09	**A5KMR**		Copper	1.1	04
1.8	92	Z 18 XE	09/00 → 12/09	**D6KMR**		Copper	0.9	04
CORSA D								
1.0	48	A 10 XEP	01/10 →	**A5KMR**		Copper	1.1	03
	44	A 10 XEP	07/06 →	**A5KMR**		Copper	1.1	03
1.2	59	Z 12 XEP	07/06 →	**A5KMR**		Copper	1.1	04
1.4	66	Z 14 XEP	07/06 →	**A5KMR**		Copper	1.1	04
FRONTERA A								
2.2 i (54MWL4)	100	X 22 XE	03/95 → 10/98	**D6KMR**		Copper	0.9	04
2.4 i (53MWL4)	92	C 24 NE	03/92 → 10/98	**CW6NP**	→ 02/95	Nickel	0.8	04
	92	C 24 NE	03/92 → 10/98	**CW6NP**	→ 02/95	Copper	0.8	04
FRONTERA A Sport								
2.0 i (52SUD2, 55SUD2)	85	C 20 NE	03/92 → 10/98	**D6KMR**		Copper	0.9	04
	85	X 20 SE	03/92 → 10/98	**D6KMR**		Copper	0.9	04
FRONTERA B								
2.2 i (6B_ZC, 6B_VF, 6B_66, 6B_76)	100	Y 22 SE	10/98 →	**CT5KMMR11**	→ 07/05	Copper	1.1	04
	100	X 22 SE	10/98 →	**CT5KMMR11**	→ 07/05	Copper	1.1	04
INSIGNIA								
1.6	85	A 16 XER	07/08 →	**A5KMR**		Copper	1.1	04

	kW					CORE		QTY
OPEL								
KADETT E								
1.4 i	44	C 14 NZ	01/90 → 08/91	**CW7LPR**		Nickel	0.8	04
	44	C 14 NZ	01/90 → 08/91	**CT6FMR**		Copper	0.8	04
1.4 S	55	14 NV	01/90 → 08/91	**CW7LPR**		Nickel	0.8	04
	55	14 NV	01/90 → 08/91	**CT6FMR**		Copper	0.8	04
1.8	82	18 SE	12/88 → 08/91	**CT6FMR**		Copper	0.8	04
	84	18 E	09/87 → 08/90	**CW7LPR**		Nickel	0.8	04
	84	18 E	09/87 → 08/90	**CT6FMR**		Copper	0.8	04
1.8 i	66	18 SV	09/90 → 08/91	**CW7LPR**		Nickel	0.8	04
	66	C 18 NZ	09/90 → 08/91	**CW7LPR**		Nickel	0.8	04
	66	C 18 NT	09/90 → 08/91	**CW7LPR**		Nickel	0.8	04
	66	18 SV	09/90 → 08/91	**CT6FMR**		Copper	0.8	04
	66	C 18 NZ	09/90 → 08/91	**CT6FMR**		Copper	0.8	04
	66	C 18 NT	09/90 → 08/91	**CT6FMR**		Copper	0.8	04
1.8 S	62	E 18 NV	09/87 → 08/91	**CW7LPR**		Nickel	0.8	04
	62	E 18 NV	09/87 → 08/91	**CT6FMR**		Copper	0.8	04
2.0 GSI 16V	115	20 XE	12/87 → 08/91	**CT6KMR**		Copper	0.8	04
	110	20 XEJ	03/88 → 08/91	**7LPR**		Nickel	0.8	04
	110	20 XEJ	03/88 → 08/91	**CT6KMR**		Copper	0.8	04
	115	20 XE	12/87 → 08/91	**7LPR**		Nickel	0.8	04
2.0 GSI 16V Cat	110	C 20 XE	03/88 → 08/91	**7LPR**		Nickel	0.8	04
	110	C 20 XE	03/88 → 08/91	**CT6KMR**		Copper	0.8	04
2.0 i	85	20 SE	03/87 → 08/91	**CW7LPR**		Nickel	0.8	04
	85	20 NE	03/87 → 08/91	**CW7LPR**		Nickel	0.8	04
	85	20 SE	03/87 → 08/91	**CT6FMR**		Copper	0.8	04
	85	20 NE	03/87 → 08/91	**CT6FMR**		Copper	0.8	04
2.0 i Cat	85	C 20 NE	03/87 → 08/91	**CW7LPR**		Nickel	0.8	04
	85	C 20 NE	03/87 → 08/91	**CT6FMR**		Copper	0.8	04
KADETT E Cabriolet								
1.3 S	55	13 S	03/87 → 02/93	**CT6FMR**	→ 01/89	Copper	0.8	04
1.4 S	55	14 NV	08/90 → 02/93	**CT6FMR**	→ 01/91	Copper	0.8	04
1.6 i	60	16 SV	07/89 → 02/93	**CT6FMR**	→ 01/91	Copper	0.8	04
1.6 i Cat	55	C 16 NZ	10/87 → 02/93	**CT6FMR**	→ 02/91	Copper	0.8	04
	55	C 16 LZ	10/87 → 02/93	**CT6FMR**	→ 02/91	Copper	0.8	04
KADETT E Combo								
1.4 i	44	C 14 NZ	08/91 → 07/94	**CT6FMR**	→ 03/93	Copper	0.8	04
1.6 i	55	C 16 NZ	08/91 → 07/94	**CT6FMR**	→ 03/93	Copper	0.8	04
KADETT E Furgonato								
1.6 i	55	C 16 NZ	08/89 → 09/93	**CT6FMR**	→ 01/91	Copper	0.8	04
MERIVA								
1.4 16V Twinport	66	Z 14 XEP	07/04 → 05/10	**A5KMR**		Copper	1.1	04
1.6	64	Z 16 SE	05/03 → 05/10	**D6KMR**		Copper	0.9	04
	77	Z 16 XEP	01/06 → 05/10	**A5KMR**		Copper	1.1	04
1.6 16V	74	Z 16 XE	05/03 → 01/06	**D6KMR**		Copper	0.9	04
1.8	92	Z 18 XE	05/03 → 05/10	**D6KMR**		Copper	0.9	04

	kW					CORE		QTY
OPEL								
MOKKA								
1.6	85	B 16 XER	06/12 →	**A5KMR**		Copper	1.1	04
	85	A 16 XER	06/12 →	**A5KMR**		Copper	1.1	04
MONTEREY A								
3.2 (UBS25_)	130	6 VD1	06/92 → 07/98	**CT6KMMR**		Copper	0.8	06
MONZA E								
1.4 i	44	C 14 NZ	01/90 → 08/91	**CT6FMR**		Copper	0.8	04
1.4 S	55	14 NV	01/90 → 08/91	**CT6FMR**		Copper	0.8	04
1.8	84	18 E	09/87 → 08/90	**CT6FMR**		Copper	0.8	04
1.8 i	66	18 SV	09/90 → 08/91	**CT6FMR**		Copper	0.8	04
	66	C 18 NZ	09/90 → 08/91	**CT6FMR**		Copper	0.8	04
	66	C 18 NT	09/90 → 08/91	**CT6FMR**		Copper	0.8	04
1.8 S	62	E 18 NV	09/87 → 08/91	**CT6FMR**		Copper	0.8	04
2.0 i	85	20 SE	03/87 → 08/91	**CT6FMR**		Copper	0.8	04
	85	20 NE	03/87 → 08/91	**CT6FMR**		Copper	0.8	04
2.0 i Cat	85	C 20 NE	03/87 → 08/91	**CT6FMR**		Copper	0.8	04
OMEGA A								
1.8	65	E 18 NVR	09/87 → 03/94	**CW7LPR**		Nickel	0.8	04
	65	E 18 NVR	09/87 → 03/94	**CT6FMR**		Copper	0.8	04
2.0	73	C 20 NEJ	09/90 → 03/94	**D6KMR**		Copper	0.9	04
	74	C 20 NEF	09/90 → 03/94	**CT5FMR**		Copper	0.8	04
2.4 i	92	C 24 NE	09/88 → 03/94	**CW6NP**		Nickel	0.8	04
2.6 i	110	C 26 NE	09/90 → 03/94	**CW6NP**		Nickel	0.8	06
3.0 (3000)	115	C 30 LE	03/87 → 12/87	**CW6NP**		Nickel	0.8	06
	130	30 NE	03/87 → 09/90	**CW6NP**		Copper	0.8	06
3.0 24V (3000)	147	C 30 SEJ	09/89 → 03/94	**D6KMR**		Copper	0.9	06
	150	C 30 SE	09/89 → 03/94	**D6KMR**		Copper	0.9	06
OMEGA B								
2.0	85	20 SE	03/94 → 12/00	**D6KMR**		Copper	0.9	04
	85	X 20 SE	03/94 → 09/99	**D6KMR**		Copper	0.9	04
	90	XF 20 E	05/94 → 05/99	**D6KMR**		Copper	0.9	04
2.0 16V	100	X 20 XEV	03/94 → 09/99	**D6KMR**		Copper	0.9	04
2.2 16V	106	Z 22 XE	09/99 → 07/03	**D6KMR**		Copper	0.9	04
	106	Y 22 XE	09/99 → 07/03	**D6KMR**		Copper	0.9	04
SENATOR B								
2.5 i	103	25 NE	09/90 → 09/93	**CW6NP**		Copper	0.8	06
2.6 i	110	C 26 NE	09/90 → 09/93	**CW6NP**		Copper	0.8	06
3.0	115	C 30 LE	09/87 → 09/93	**CW6NP**		Copper	0.8	06
	130	30 NE	01/88 → 09/90	**CW6NP**		Copper	0.8	06
3.0 24V	150	C 30 SE	09/89 → 09/93	**D6KMR**		Copper	0.9	06
SIGNUM								
1.8	90	Z 18 XE	05/03 →	**D6KMR**		Copper	0.9	04
	90	Z 18 XE	05/03 →	**A5KMR**		Copper	1.1	04
	103	Z 18 XER	09/05 →	**A5KMR**		Copper	1.1	04
3.2 V6	155	Z 32 SE	05/03 →	**D6KMR**	→ 09/05	Copper	0.9	06

	kW					CORE		QTY
OPEL								
SINTRA								
2.2 i 16V	104	X 22 XE	11/96 → 04/99	**D6KMR**		Copper	0.9	04
3.0 i 24V	148	X 30 XE	11/96 → 04/99	**D6KMR**		Copper	0.9	06
SPEEDSTER								
2.0 Turbo	147	Z 20 LET	04/03 →	**D6KMR**		Copper	0.9	04
TIGRA								
1.4 16V	63	X 14 XE	08/97 → 12/00	**D6KMR**		Copper	0.9	04
	66	X 14 XE	07/94 → 12/00	**D6KMR**		Copper	0.9	04
1.6 16V	74	C 16 SEL	08/97 → 08/98	**D6KMR**		Copper	0.9	04
	78	X 16 XE	07/94 → 08/98	**D6KMR**		Copper	0.9	04
TIGRA TwinTop								
1.4	66	Z 14 XEP	06/04 →	**A5KMR**		Copper	1.1	04
1.8	92	Z 18 XE	06/04 →	**A5KMR**	→ 08/09	Copper	1.1	04
VECTRA A								
1.4 S	55	14 NV	09/88 → 06/92	**CW7LPR**		Nickel	0.8	04
	55	14 NV	09/88 → 06/92	**CT6FMR**		Copper	0.8	04
1.6	60	16 SV	09/88 → 05/93	**CW7LPR**		Nickel	0.8	04
	60	16 SV	09/88 → 05/93	**CT6FMR**		Copper	0.8	04
1.6 i	52	X 16 SZ	09/93 → 11/95	**D6KMR**		Copper	0.9	04
	55	C 16 NZ	09/88 → 11/95	**D6KMR**	09/93 →	Copper	0.9	04
	55	E 16 NZ	09/88 → 11/95	**D6KMR**	09/93 →	Copper	0.9	04
	55	C 16 NZ2	09/88 → 11/95	**D6KMR**	09/93 →	Copper	0.9	04
	55	C 16 LZ2	09/93 → 11/95	**D6KMR**		Copper	0.9	04
	55	16 LZ2	09/93 → 11/95	**D6KMR**		Copper	0.9	04
	55	E 16 NZ	09/88 → 11/95	**CT5FMR**	09/93 →	Copper	0.8	04
1.6 i Cat	55	C 16 NZ2	09/88 → 11/95	**CT5FMR**	09/93 →	Copper	0.8	04
	55	C 16 NZ	09/88 → 11/95	**CT5FMR**	09/93 →	Copper	0.8	04
1.6 S	60	16 SV	09/88 → 05/93	**CT6FMR**		Copper	0.8	04
1.8 i Cat	66	C 18 NZ	03/90 → 11/95	**CT5FMR**		Copper	0.8	04
1.8 S	65	E 18 NVR	09/88 → 07/89	**CW7LPR**		Nickel	0.8	04
	66	18 SV	09/89 → 10/90	**CW7LPR**		Nickel	0.8	04
	65	E 18 NVR	09/88 → 07/89	**CT6FMR**		Copper	0.8	04
	66	18 SV	09/89 → 10/90	**CT6FMR**		Copper	0.8	04
1.8 S 4x4	65	E 18 NVR	01/89 → 07/89	**CW7LPR**		Nickel	0.8	04
	65	E 18 NVR	01/89 → 07/89	**CT6FMR**		Copper	0.8	04
2.0	74	C 20 NEF	04/88 → 09/89	**CT5FMR**		Copper	0.8	04
2.0 i	95	20 SEH	09/88 → 09/92	**CW7LPR**		Nickel	0.8	04
	85	20 NE	09/88 → 10/90	**D6KMR**		Copper	0.9	04
	95	20 SEH	09/88 → 09/92	**CT6FMR**		Copper	0.8	04
2.0 i 16V	100	X 20 XEV	06/94 → 11/95	**D6KMR**		Copper	0.9	04
2.0 i 16V 4x4	100	X 20 XEV	06/94 → 11/95	**D6KMR**		Copper	0.9	04
2.0 i 16V Cat	110	C 20 XE	02/90 → 11/95	**D6KMR**		Copper	0.9	04
2.0 i 4x4	95	20 SEH	01/89 → 09/92	**CW7LPR**		Nickel	0.8	04
	85	20 NE	01/89 → 10/90	**D6KMR**		Copper	0.9	04
	95	20 SEH	01/89 → 09/92	**CT6FMR**		Copper	0.8	04

	kW					CORE		QTY
OPEL								
VECTRA A								
2.0 i Cat	85	C 20 NE	09/88 → 11/95	**D6KMR**		Copper	0.9	04
2.0 i Cat 4x4	85	C 20 NE	01/89 → 11/95	**D6KMR**		Copper	0.9	04
2.0 i GT	95	20 SEH	09/88 → 11/95	**CT6FMR**		Copper	0.8	04
2.5 V6	125	C 25 XE	02/93 → 11/95	**D6KMR**		Copper	0.9	06
2000 16V 4x4	110	20 XEJ	01/89 → 10/90	**CT6KMMR**		Copper	0.8	04
2000/GT 16V	110	20 XEJ	01/89 → 06/94	**CT6KMMR**		Copper	0.8	04
2000/GT 16V Cat	110	C 20 XE	02/90 → 11/95	**D6KMR**		Copper	0.9	04
2000/GT 16V Cat 4x4	110	C 20 XE	02/90 → 11/95	**D6KMR**		Copper	0.9	04
VECTRA B								
1.6 GL	60	16 SV	09/95 → 08/96	**D6KMR**		Copper	0.9	04
1.6 i	55	16 LZ2	10/95 → 04/02	**D6KMR**		Copper	0.9	04
	55	X 16 SZR	10/95 → 04/02	**D6KMR**		Copper	0.9	04
1.6 i 16V	74	Y 16 XE	10/95 → 04/02	**D6KMR**		Copper	0.9	04
	74	Z 16 XE	10/95 → 04/02	**D6KMR**		Copper	0.9	04
	74	X 16 XEL	10/95 → 04/02	**D6KMR**		Copper	0.9	04
1.8 i 16V	85	X 18 XE1	10/95 → 09/00	**D6KMR**		Copper	0.9	04
	85	Z 18 XEL	10/95 → 09/00	**D6KMR**		Copper	0.9	04
	85	X 18 XE	10/95 → 09/00	**D6KMR**		Copper	0.9	04
	92	Z 18 XE	09/00 → 04/02	**D6KMR**		Copper	0.9	04
2.0 i	82	20 NEJ	10/95 → 04/02	**D6KMR**		Copper	0.9	04
2.0 i 16V	100	X 20 XEV	10/95 → 09/00	**D6KMR**		Copper	0.9	04
	100	C 20 SEL	10/95 → 09/00	**D6KMR**		Copper	0.9	04
2.5	144	X 25 XE	10/99 → 06/00	**D6KMR**		Copper	0.9	06
2.5 i V6	125	X 25 XE	10/95 → 09/00	**D6KMR**		Copper	0.9	06
2.6 i V6	125	Y 26 SE	09/00 → 04/02	**D6KMR**		Copper	0.9	06
i 500 2.5	143	X 25 XE	05/98 → 09/00	**D6KMR**		Copper	0.9	06
VECTRA C								
1.6	74	Z 16 XE	08/05 →	**A5KMR**	→ 02/09	Copper	1.1	04
	77	Z 16 XEP	01/06 →	**D6KMR**	→ 02/09	Copper	0.9	04
	77	Z 16 XEP	01/06 →	**A5KMR**	→ 02/09	Copper	1.1	04
1.6 16V	74	Z 16 XE	06/04 →	**D6KMR**	10/05 → 02/09	Copper	0.9	04
1.8	81	Z 18 XEL	04/02 →	**D6KMR**	→ 09/05	Copper	0.9	04
	81	Z 18 XEL	04/02 →	**A5KMR**	→ 09/05	Copper	1.1	04
	103	Z 18 XER	01/06 →	**A5KMR**	→ 02/09	Copper	1.1	04
1.8 16V	90	Z 18 XE	04/02 →	**D6KMR**	→ 02/09	Copper	0.9	04
	90	Z 18 XE	04/02 →	**A5KMR**	→ 02/09	Copper	1.1	04
3.2 V6	155	Z 32 SE	08/02 →	**D6KMR**	→ 09/05	Copper	0.9	06
VITA B								
1.0 i 12V	40	X 10 XE	11/96 → 09/00	**D6KMR**		Copper	0.9	03

	kW					CORE		QTY
OPEL								
VITA B								
1.2 i	33	12 NZ	03/93 → 09/00	**D6KMR**		Copper	0.9	04
	33	C 12 NZ	03/93 → 09/00	**D6KMR**		Copper	0.9	04
	33	X 12 SZ	03/93 → 09/00	**D6KMR**		Copper	0.9	04
	33	12 NZ	03/93 → 09/00	**CT5FMR**		Copper	0.8	04
	33	X 12 SZ	03/93 → 09/00	**CT5FMR**		Copper	0.8	04
	33	C 12 NZ	03/93 → 09/00	**CT5FMR**		Copper	0.8	04
1.2 i 16V	48	X 12 XE	03/98 → 09/00	**D6KMR**		Copper	0.9	04
1.4 i	40	X 14 SZ	03/93 → 09/00	**D6KMR**	08/95 →	Copper	0.9	04
	40	C 14 NZ	03/93 → 09/00	**D6KMR**	08/95 →	Copper	0.9	04
	40	C 14 NZ	03/93 → 09/00	**CT5FMR**	08/95 →	Copper	0.8	04
	40	X 14 SZ	03/93 → 09/00	**CT5FMR**	08/95 →	Copper	0.8	04
	44	X 14 SZ	03/93 → 09/00	**D6KMR**	08/95 →	Copper	0.9	04
	44	C 14 NZ	03/93 → 09/00	**D6KMR**	08/95 →	Copper	0.9	04
	44	C 14 NZ	03/93 → 09/00	**CT5FMR**	08/95 →	Copper	0.8	04
	44	X 14 SZ	03/93 → 09/00	**CT5FMR**	08/95 →	Copper	0.8	04
1.4 i 16V	63	C 14 SEL	08/97 → 09/00	**D6KMR**		Copper	0.9	04
	66	X 14 XE	09/94 → 09/00	**D6KMR**		Copper	0.9	04
	67	X 14 XE	09/94 → 09/00	**YJT6KMR**	→ 08/99	Copper	1.0	04
1.4 Si	60	C 14 SE	03/93 → 09/00	**D6KMR**		Copper	0.9	04
	60	C 14 SE	03/93 → 09/00	**CT5FMR**		Copper	0.8	04
1.6 GSI 16V	80	C 16 XE	03/93 → 09/00	**D6KMR**		Copper	0.9	04
1.6 i 16V	74	C 16 SEL	08/97 → 09/00	**D6KMR**		Copper	0.9	04
	78	X 16 XE	09/94 → 09/00	**D6KMR**		Copper	0.9	04
VITA C								
1.0	43	Z 10 XE	09/00 → 06/03	**D6KMR**		Copper	0.9	03
	44	Z 10 XEP	06/03 → 12/09	**A5KMR**		Copper	1.1	03
1.2	55	Z 12 XE	09/00 → 12/09	**D6KMR**		Copper	0.9	04
1.2 Twinport	59	Z 12 XEP	07/04 → 12/09	**A5KMR**		Copper	1.1	04
1.4	66	Z 14 XE	09/00 → 12/09	**D6KMR**		Copper	0.9	04
1.4 Twinport	66	Z 14 XEP	06/03 → 12/09	**A5KMR**		Copper	1.1	04
1.8	92	Z 18 XE	09/00 → 12/09	**D6KMR**		Copper	0.9	04
VIVARO								
2.0 ECOTEC	86	F4R 820	08/06 →	**D6KMR**		Copper	0.9	04
ZAFIRA A								
1.6 16V	74	X 16 XEL	04/99 → 06/05	**D6KMR**		Copper	0.9	04
	74	Z 16 XE	04/99 → 06/05	**D6KMR**		Copper	0.9	04
1.8 16V	85	X 18 XE1	04/99 → 09/00	**D6KMR**		Copper	0.9	04
	92	Z 18 XE	09/00 → 06/05	**D6KMR**		Copper	0.9	04
2.0 OPC	141	Z 20 LET	09/01 → 06/05	**D6KMR**		Copper	0.9	04
	147	Z 20 LET	11/02 → 06/05	**D6KMR**		Copper	0.9	04
	147	Z 20 LER	11/02 → 06/05	**D6KMR**		Copper	0.9	04
	147	Z 20 LER	11/02 → 06/05	**A5KMR**		Copper	1.1	04
	147	Z 20 LET	11/02 → 06/05	**A5KMR**		Copper	1.1	04

	kW					CORE		QTY
OPEL								
ZAFIRA B								
1.6	77	Z 16 XEP	07/05 →	**A5KMR**	→ 07/08	Copper	1.1	04
	77	Z 16 XE1	07/05 →	**A5KMR**	→ 07/08	Copper	1.1	04
	85	Z 16 XER	01/08 →	**A5KMR**		Copper	1.1	04
	85	A 16 XER	01/08 →	**A5KMR**		Copper	1.1	04
1.8	103	Z 18 XER	07/05 →	**A5KMR**		Copper	1.1	04
	103	A 18 XER	07/05 →	**A5KMR**		Copper	1.1	04
2.0	147	Z 20 LER	07/05 →	**A5KMR**		Copper	1.1	04
2.2	110	Z 22 YH	07/05 →	**A5KMR**	→ 07/08	Copper	1.1	04
ZAFIRA C								
1.8	85	A 18 XEL	10/11 →	**A5KMR**		Copper	1.1	04
ZAFIRA TOURER C								
1.8	85	A 18 XEL	10/11 →	**A5KMR**		Copper	1.1	04

PEUGEOT								
106								
1.1	44	HDZ (TU1M)	09/91 → 04/96	**D6KMR**	07/95 →	Copper	0.9	04
1.4	51	K5A (TU3)	08/91 → 03/96	**CT6KMR**		Copper	0.8	04
	55	KDY (TU3M)	09/91 → 04/96	**D6KMR**	03/95 →	Copper	0.9	04
	55	KDX (TU3MC)	09/91 → 04/96	**D6KMR**	03/95 →	Copper	0.9	04
1.6	65	NFZ (TU5JP)	06/93 → 04/96	**CT5KMMR**		Copper	0.8	04
106 II								
1.0 i	33	CDY (TU9M)	05/96 →	**D6KMR**		Copper	0.9	04
	37	CDZ (TU9M)	01/97 →	**D6KMR**	→ 03/01	Copper	0.9	04
1.0 i KID	33	CDY (TU9M)	05/96 →	**D6KMR**		Copper	0.9	04
1.0 i Passion	37	CDZ (TU9M)	01/97 →	**D6KMR**	→ 03/01	Copper	0.9	04
1.1 i	40	HDY (TU1M)	01/97 →	**D6KMR**	03/98 → 03/01	Copper	0.9	04
	44	HDZ (TU1M)	05/96 →	**D6KMR**		Copper	0.9	04
	44	HFX (TU1JP)	05/96 →	**D6KMR**		Copper	0.9	04
1.4 i	55	KFW (TU3JP)	05/96 →	**D6KMR**	→ 07/04	Copper	0.9	04
	55	KFX (TU3JP)	05/96 →	**D6KMR**	→ 07/04	Copper	0.9	04
1.6 i	65	NFZ (TU5JP)	05/96 →	**CT5KMMR**		Copper	0.8	04
1.6 S16	87	NFX (TU5J4)	05/96 →	**CT5KMMR**		Copper	0.8	04
205								
1.4	62	K2B (TU3S)	08/87 → 06/94	**7LPR**	→ 07/88	Nickel	0.8	04
1.6	85	B6D (XU5JA)	08/87 → 07/92	**7LPR**		Nickel	0.8	04
1.9 CTi	74	DFZ (XU9J1)	08/87 → 07/90	**7LPR**		Nickel	0.8	04
	92	DKZ (XU9JAZ)	08/90 → 07/92	**7LPR**		Nickel	0.8	04
205 I								
1.4	62	K2B (TU3S)	08/87 → 06/94	**CT6KMR**	→ 07/88	Copper	0.8	04
1.4 CJ	49	K1D (TU3A)	03/89 → 12/94	**CT6KMMR**		Copper	0.8	04
1.6	85	B6D (XU5JA)	08/87 → 07/92	**CT6KMR**		Copper	0.8	04
1.9 CTi	92	DKZ (XU9JAZ)	08/90 → 07/92	**CT6KMR**		Copper	0.8	04
	74	DFZ (XU9J1)	08/87 → 07/90	**CT6KMR**		Copper	0.8	04

	kW					CORE		QTY
PEUGEOT								
205 II								
1.1	40	H1B (TU1)	10/87 → 10/90	**CT6KMMR**		Copper	0.8	04
1.1 XA	40	E1	07/87 → 10/88	**CT6KMMR**		Copper	0.8	04
1.4	55	KDX (TU3MC)	08/90 → 07/98	**D6KMR**	→ 05/97	Copper	0.9	04
	55	KDY (TU3M)	08/90 → 07/98	**D6KMR**	→ 05/97	Copper	0.9	04
	55	TU32	08/90 → 07/98	**D6KMR**	→ 05/97	Copper	0.9	04
	63	Y2/K	06/87 → 12/89	**CT6KMR**	→ 07/87	Copper	0.8	04
	63	Y2/K	06/87 → 12/89	**7LPR**	→ 07/87	Nickel	0.8	04
1.4 Cat	44	KAY (TU3CP)	08/87 → 09/93	**CT6KMMR**	→ 07/90	Copper	0.8	04
1.4 XSI	55	TU32	08/90 → 07/98	**D6KMR**	→ 05/97	Copper	0.9	04
	55	KDX (TU3MC)	08/90 → 07/98	**D6KMR**	→ 05/97	Copper	0.9	04
	55	KDY (TU3M)	08/90 → 07/98	**D6KMR**	→ 05/97	Copper	0.9	04
1.6	66	171 (XU5S)	08/90 → 07/92	**CT6KMMR**		Copper	0.8	04
1.6 Aut.	65	BDY (XU5M2Z)	05/90 → 09/98	**CT6KMMR**		Copper	0.8	04
206								
1.1	40	HFY (TU1JP)	08/98 → 07/00	**7LPR**		Nickel	0.8	04
	40	HFY (TU1JP)	08/98 → 07/00	**CT6KMR**		Copper	0.8	04
1.1 i	44	HFX (TU1JP)	09/98 →	**7LPR**		Nickel	0.8	04
	44	HFZ (TU1JP)	09/98 →	**7LPR**		Nickel	0.8	04
	44	HFX (TU1JP)	09/98 →	**CT6KMR**		Copper	0.8	04
	44	HFZ (TU1JP)	09/98 →	**CT6KMR**		Copper	0.8	04
1.4 16V	65	KFU (ET3J4)	10/03 →	**CT5LDMR9**	→ 02/07	Copper	0.9	04
1.4 i	55	KFW (TU3JP)	09/98 →	**7LPR**		Nickel	0.8	04
	55	KFX (TU3JP)	09/98 →	**7LPR**		Nickel	0.8	04
	55	KFW (TU3JP)	09/98 →	**CT6KMR**		Copper	0.8	04
	55	KFX (TU3JP)	09/98 →	**CT6KMR**		Copper	0.8	04
1.4 LPG	55	KFV (TU3JP)	05/06 → 09/07	**7LPR**		Nickel	0.8	04
	55	KFV (TU3JP)	05/06 → 09/07	**CT6KMR**		Copper	0.8	04
1.6	81	NFU (TU5JP4)	05/05 → 07/08	**CT5KHMR11**		Copper	1.1	04
1.6 16V	80	NFU (TU5JP4)	03/07 →	**CT5KHMR11**		Copper	1.1	04
	80	NFU (TU5JP4)	12/00 →	**CT5KHMR11**		Copper	1.1	04
1.6 i	65	NFZ (TU5JP)	09/98 → 12/00	**CT5KMMR**		Copper	0.8	04
1.6 i Soleil	65	NFZ (TU5JP)	09/98 → 12/00	**CT5KMMR**		Copper	0.8	04
2.0 RC	130	RFK (EW10J4S)	07/03 →	**CT6KHMR11**		Copper	1.1	04
2.0 S16	99	RFR (DEW10J4)	04/99 → 10/00	**CT5KHMR11**		Copper	1.1	04
	100	RFR (DEW10J4)	06/99 →	**CT5KHMR11**	→ 02/07	Copper	1.1	04
206 CC								
1.6 16V	80	NFU (TU5JP4)	09/00 →	**CT5KHMR11**		Copper	1.1	04
206 SW								
1.4	55	KFV (TU3A)	07/02 →	**CT6KMR**		Copper	0.8	04
	55	KFW (TU3JP)	07/02 →	**CT6KMR**		Copper	0.8	04
1.4 Presence	55	KFV (TU3A)	07/02 →	**CT6KMR**		Copper	0.8	04
	55	KFW (TU3JP)	07/02 →	**CT6KMR**		Copper	0.8	04
1.6 16V	80	NFU (TU5JP4)	07/02 →	**CT5KHMR11**		Copper	1.1	04
2.0 16V	100	RFN (EW10J4)	07/02 →	**CT5KHMR11**	→ 02/07	Copper	1.1	04

	kW					CORE		QTY
PEUGEOT								
206+								
1.1	44	HFX (TU1A)	01/09 →	**CT6KMR**		Copper	0.8	04
	44	TU1AE5	01/09 →	**CT6KMR**		Copper	0.8	04
	44	HFX (TU1JP)	01/09 →	**CT6KMR**		Copper	0.8	04
1.4 i	54	KFT (TU3A)	09/10 →	**CT6KMR**		Copper	0.8	04
	55	KFV (TU3A)	01/09 →	**CT6KMR**		Copper	0.8	04
	55	KFW (TU3A)	01/09 →	**CT6KMR**		Copper	0.8	04
1.6 16V	80	NFU (TU5JP4)	07/10 →	**CT5KHMR11**		Copper	1.1	04
207								
1.4	53	KFV (TU3A)	02/06 →	**7LPR**		Nickel	0.8	04
	53	KFV (TU3A)	02/06 →	**CT6KMR**		Copper	0.8	04
	54	KFT (TU3A)	12/07 →	**7LPR**		Nickel	0.8	04
	54	KFV (TU3A)	12/07 →	**7LPR**		Nickel	0.8	04
	54	KFT (TU3A)	12/07 →	**CT6KMR**		Copper	0.8	04
	55	KFV (TU3A)	08/08 →	**7LPR**		Nickel	0.8	04
	55	KFW (TU3A)	08/08 →	**7LPR**		Nickel	0.8	04
	55	KFV (TU3A)	08/08 →	**CT6KMR**		Copper	0.8	04
1.4 16V	65	KFU (ET3J4)	02/06 →	**CT5LDMR9**		Copper	0.9	04
1.4 Bioflex	60	KFW (TU3JP)	08/08 →	**7LPR**		Nickel	0.8	04
	60	KFW (TU3JP)	08/08 →	**CT6KMR**		Copper	0.8	04
1.4 XR Sport Bioflex	60	KFW (TU3JP)	08/08 →	**7LPR**		Nickel	0.8	04
	60	KFW (TU3JP)	08/08 →	**CT6KMR**		Copper	0.8	04
1.6	81	N6A (TU5JP4)	08/08 →	**CT5KHMR11**		Copper	1.1	04
1.6 16V	80	NFU (TU5JP4)	02/06 →	**CT5KHMR11**		Copper	1.1	04
207 Tre volumi								
1.4 Flex	60	KFW (TU3A)	11/08 →	**CT6KMR**		Copper	0.8	04
1.4 Passion XR Flex	60	KFW (TU3A)	11/08 →	**CT6KMR**		Copper	0.8	04
1.6 Bioflex	83	N6A (TU5JP4)	01/08 →	**CT6KHMR11**		Copper	1.1	04
1.6 Passion XS Bioflex	83	N6A (TU5JP4)	01/08 →	**CT6KHMR11**		Copper	1.1	04
306								
1.1	44	HDZ (TU1M)	05/93 → 05/01	**D6KMR**	07/95 →	Copper	0.9	04
1.4 SL	55	KFW (TU3JP)	06/94 → 05/01	**D6KMR**	07/95 →	Copper	0.9	04
	55	KDX (TU3MC)	06/94 → 05/01	**D6KMR**	07/95 →	Copper	0.9	04
	55	KFX (TU3JP)	06/94 → 05/01	**D6KMR**	07/95 →	Copper	0.9	04
1.6	65	NFZ (TU5JP)	05/93 → 10/00	**CT5KMMR**		Copper	0.8	04
	66	NFZ (TU5JP)	07/00 → 05/01	**7LPR**		Nickel	0.8	04
	66	NFZ (TU5JP)	07/00 → 05/01	**CT6KMR**		Copper	0.8	04
	72	NFT (TU5JP)	10/00 → 05/01	**7LPR**		Nickel	0.8	04
	72	NFT (TU5JP)	10/00 → 05/01	**CT6KMR**		Copper	0.8	04
1.6 SR	65	NFZ (TU5JP)	06/94 → 10/00	**CT5KMMR**		Copper	0.8	04
1.8	74	LFZ (XU7JP)	05/93 → 05/01	**CT6KMMR**	→ 06/95	Copper	0.8	04
1.8 16V	81	LFY (XU7JP4)	03/97 → 05/01	**D6KMR**		Copper	0.9	04
1.8 Rallye 16V	81	LFY (XU7JP4)	03/97 → 05/01	**D6KMR**		Copper	0.9	04

	kW					CORE		QTY
PEUGEOT								
306								
1.8 ST	74	LFZ (XU7JP)	06/94 → 05/01	**CT6KMMR**	→ 06/95	Copper	0.8	04
1.8 XSI	74	LFZ (XU7JP)	06/94 → 05/01	**CT6KMMR**	→ 06/95	Copper	0.8	04
2.0	97	RFV (XU10J4R)	03/97 → 05/01	**D6KMR**		Copper	0.9	04
2.0 16V	97	RFV (XU10J4R)	03/97 → 05/01	**D6KMR**		Copper	0.9	04
	99	RFV (XU10J4R)	03/97 → 06/00	**D6KMR**		Copper	0.9	04
2.0 S16	120	RFS (XU10J4RS)	03/96 → 05/01	**7LPR**		Nickel	0.8	04
	120	RFS (XU10J4RS)	03/96 → 05/01	**CT6KMR**		Copper	0.8	04
2.0 ST	89	RFX (XU10J2)	07/94 → 05/01	**D6KMR**		Copper	0.9	04
2.0 XSi	89	RFX (XU10J2)	05/93 → 05/01	**D6KMR**		Copper	0.9	04
306 Break								
1.4	55	KFX (TU3JP)	03/97 → 04/02	**D6KMR**		Copper	0.9	04
	55	KFW (TU3JP)	03/97 → 04/02	**D6KMR**		Copper	0.9	04
1.6	65	NFZ (TU5JP)	03/97 → 10/00	**CT5KMMR**		Copper	0.8	04
	72	NFT (TU5JP)	10/00 → 04/02	**D6KMR**		Copper	0.9	04
1.8	74	LFZ (XU7JP)	03/97 → 04/02	**D6KMR**		Copper	0.9	04
1.8 16V	81	LFY (XU7JP4)	03/97 → 04/02	**D6KMR**		Copper	0.9	04
306 Cabriolet								
1.6	65	NFZ (TU5JP)	04/96 → 10/00	**CT5KMMR**		Copper	0.8	04
1.8	74	LFZ (XU7JP)	03/94 → 04/02	**D6KMR**	07/95 →	Copper	0.9	04
1.8 16V	81	LFY (XU7JP4)	07/00 → 04/02	**D6KMR**		Copper	0.9	04
2.0	89	RFX (XU10J2)	03/94 → 04/02	**D6KMR**	01/00 →	Copper	0.9	04
307								
1.4	55	KFW (TU3JP)	08/00 →	**7LPR**	09/01 → 06/05	Nickel	0.8	04
	55	KFW (TU3JP)	08/00 →	**CT6KMR**	09/01 → 06/05	Copper	0.8	04
1.4 16V	65	KFU (ET3J4)	11/03 →	**CT5LDMR9**	→ 01/08	Copper	0.9	04
1.6	81	NFU (TU5JP4)	07/06 →	**CT5KHMR11**		Copper	1.1	04
1.6 16V	80	NFU (TU5JP4)	08/00 →	**CT5KHMR11**		Copper	1.1	04
1.6 BioFlex	80	NFU (TU5JP4)	09/07 →	**CT6KHMR11**		Copper	1.1	04
1.6 Passion 16V	80	NFU (TU5JP4)	08/00 →	**CT5KHMR11**		Copper	1.1	04
2.0	100	RFN (EW10J4)	03/02 →	**CT5KHMR11**	→ 06/05	Copper	1.1	04
	105	RFN (EW10J4)	08/08 →	**CT5KHMR11**	→ 03/09	Copper	1.1	04
2.0 16V	100	RFN (EW10J4)	08/00 →	**CT5KHMR11**	→ 06/05	Copper	1.1	04
	103	RFN (EW10J4)	03/05 →	**CT5KHMR11**	→ 11/07	Copper	1.1	04
	103	RFJ (EW10A)	03/05 →	**CT5KHMR11**	→ 11/07	Copper	1.1	04
	130	RFK (EW10J4S)	06/05 →	**CT6KHMR11**	→ 11/07	Copper	1.1	04
2.0 Feline	105	RFN (EW10J4)	08/08 →	**CT5KHMR11**	→ 03/09	Copper	1.1	04
2.0 Rallye 16V	100	RFN (EW10J4)	08/00 →	**CT5KHMR11**	→ 06/05	Copper	1.1	04
307 Break								
1.4	55	KFW (TU3JP)	04/02 → 09/03	**CT6KMR**		Copper	0.8	04
1.4 16V	65	KFU (ET3J4)	11/03 →	**CT5LDMR9**	→ 11/07	Copper	0.9	04
1.6 16V	80	NFU (TU5JP4)	03/02 →	**CT5KHMR11**		Copper	1.1	04
2.0 16V	103	RFN (EW10J4)	03/05 →	**CT5KHMR11**	→ 06/08	Copper	1.1	04
	103	RFJ (EW10A)	03/05 →	**CT5KHMR11**	→ 06/08	Copper	1.1	04

	kW					CORE		QTY
PEUGEOT								
307 CC								
1.6 16V	80	NFU (TU5JP4)	02/05 →	**CT5KHMR11**		Copper	1.1	04
2.0 16V	103	RFJ (EW10A)	03/05 →	**CT5KHMR11**	→ 03/09	Copper	1.1	04
	130	RFK (EW10J4S)	10/03 →	**CT6KHMR11**	→ 03/09	Copper	1.1	04
308								
1.6 BioFlex	80	NFU (TU5JP4)	04/08 →	**CT6KHMR11**		Copper	1.1	04
	82	NFU (TU5JP4)	03/09 →	**CT6KHMR11**		Copper	1.1	04
2.0 BioFlex	103	RFJ (EW10A)	01/08 →	**CT6KHMR11**		Copper	1.1	04
308 CC								
2.0 CVVT	103	RFJ (EW10A)	07/09 → 11/14	**CT6KHMR11**		Copper	1.1	04
309 I								
1.4	55	KDY (TU3M)	03/89 → 07/89	**CT6KMR**		Copper	0.8	04
	55	KDZ (TU3M)	03/89 → 07/89	**CT6KMR**		Copper	0.8	04
1.5	63	Y2/K	06/87 → 12/89	**CT6KMMR**		Copper	0.8	04
1.6	53	B1E (XU51C)	08/87 → 07/89	**CT6KMMR**		Copper	0.8	04
1.9	80	DDZ (XU9M)	07/88 → 07/89	**CT6KMMR**		Copper	0.8	04
1.9 GTI	88	DKZ (XU9JAZ)	07/88 → 07/89	**CT6KMMR**		Copper	0.8	04
309 II								
1.1	44	HDZ (TU1M)	08/90 → 12/93	**CT6KMMR**		Copper	0.8	04
1.4	55	KDY (TU3M)	07/89 → 12/93	**7LPR**		Nickel	0.8	04
	55	KDZ (TU3M)	07/89 → 12/93	**7LPR**		Nickel	0.8	04
	49	K1D (TU3A)	07/90 → 12/93	**CT6KMMR**	→ 10/92	Copper	0.8	04
	55	KDY (TU3M)	07/89 → 12/93	**CT6KMR**		Copper	0.8	04
	55	KDZ (TU3M)	07/89 → 12/93	**CT6KMR**		Copper	0.8	04
1.6	65	BDY (XU5M2Z)	07/89 → 12/93	**CT6KMMR**		Copper	0.8	04
	65	BDZ (XU5M)	07/89 → 12/93	**CT6KMMR**		Copper	0.8	04
	65	BDY (XU5M3Z)	07/89 → 12/93	**CT6KMMR**		Copper	0.8	04
	68	B2A (XU52C/K)	07/89 → 12/93	**CT6KMMR**		Copper	0.8	04
1.9	72	DFZ (XU9J1)	08/89 → 12/93	**CT6KMMR**		Copper	0.8	04
	80	DDZ (XU9M)	10/90 → 12/93	**CT6KMMR**		Copper	0.8	04
1.9 GTI	88	DKZ (XU9JAZ)	07/89 → 12/93	**CT6KMMR**		Copper	0.8	04
405								
1.6	53	B1E (XU51C)	07/87 → 12/92	**CT6KMMR**		Copper	0.8	04
	55	B1E (XU51C)	07/87 → 06/88	**CT6KMMR**		Copper	0.8	04
	55	BAZ (XU5CP)	07/87 → 06/88	**CT6KMMR**		Copper	0.8	04
	65	BDY (XU5M2Z)	07/87 → 12/92	**CT6KMMR**		Copper	0.8	04
	68	B2A (XU52C/K)	05/88 → 07/92	**7LPR**		Nickel	0.8	04
1.9 4x4	88	DKZ (XU9JAZ)	07/90 → 07/92	**7LPR**		Nickel	0.8	04
2.0 16V	97	RFV (XU10J4R)	11/95 → 05/04	**7LPR**		Nickel	0.8	04
	99	RFR (DEW10J4)	01/99 → 08/00	**7LPR**		Nickel	0.8	04

	kW					CORE		QTY
PEUGEOT								
405 I								
1.6	65	BDY (XU5M3Z)	10/88 → 08/92	**CT6KMMR**		Copper	0.8	04
	68	B2A (XU52C/K)	05/88 → 07/92	**CT6KMR**		Copper	0.8	04
	53	B1E (XU51C)	07/87 → 12/92	**CT6KMMR**		Copper	0.8	04
	55	B1E (XU51C)	07/87 → 06/88	**CT6KMMR**		Copper	0.8	04
	55	BAZ (XU5CP)	07/87 → 06/88	**CT6KMMR**		Copper	0.8	04
	65	BDY (XU5M2Z)	07/87 → 12/92	**CT6KMMR**		Copper	0.8	04
	65	BDZ (XU5M)	07/87 → 12/92	**CT6KMMR**		Copper	0.8	04
	66	BDZ (XU5M)	10/89 → 12/92	**CT6KMMR**		Copper	0.8	04
	69	B2A (XU52C/K)	01/87 → 12/92	**CT6KMMR**		Copper	0.8	04
1.9	77	DFZ (XU9J1)	10/88 → 08/92	**CT6KMMR**		Copper	0.8	04
	80	DDZ (XU9M)	07/88 → 12/92	**CT6KMMR**		Copper	0.8	04
	88	DKZ (XU9JAZ)	07/88 → 12/92	**CT6KMMR**		Copper	0.8	04
1.9 4x4	88	DKZ (XU9JAZ)	07/90 → 07/92	**CT6KMR**		Copper	0.8	04
	80	DDZ (XU9M)	07/88 → 12/92	**CT6KMMR**		Copper	0.8	04
1.9 Injection	77	DFZ (XU9J1)	07/87 → 12/92	**CT6KMMR**		Copper	0.8	04
405 II								
1.4	55	KDX (TU3MC)	08/92 → 10/95	**CT6KMMR**		Copper	0.8	04
1.6	65	BDY (XU5M2Z)	08/92 → 10/95	**CT6KMMR**	01/95 →	Copper	0.8	04
	65	BFZ (XU5JP)	08/92 → 10/95	**CT6KMMR**	01/95 →	Copper	0.8	04
	65	BDZ (XU5M)	08/92 → 10/95	**CT6KMMR**	01/95 →	Copper	0.8	04
	65	BDY (XU5M3Z)	08/92 → 10/95	**CT6KMMR**	01/95 →	Copper	0.8	04
1.8	74	LFZ (XU7JP)	08/92 → 10/95	**CT6KMMR**		Copper	0.8	04
2.0	89	RFX (XU10J2)	08/92 → 10/95	**CT6KMMR**		Copper	0.8	04
2.0 SRI	89	RFX (XU10J2)	08/92 → 10/95	**CT6KMMR**		Copper	0.8	04
2.0 T 16 X4	144	RGZ (XU10J4TE/Z)	08/92 → 10/95	**D6KMR**		Copper	0.9	04
406								
1.6	65	BFZ (XU5JP)	11/95 → 05/04	**D6KMR**	→ 03/99	Copper	0.9	04
1.8	66	LFX (XU7JB)	05/97 → 05/04	**D6KMR**	→ 03/99	Copper	0.9	04
1.8 16V	81	LFY (XU7JP4)	11/95 → 10/00	**D6KMR**		Copper	0.9	04
	85	6FZ (EW7J4)	10/00 → 05/04	**CT5KHMR11**		Copper	1.1	04
2.0	104	RGY (XU10J2TE)	11/96 → 03/99	**D6KMR**		Copper	0.9	04
2.0 16V	97	RFV (XU10J4R)	10/96 → 10/04	**7LPR**		Nickel	0.8	04
	97	RFV (XU10J4R)	11/95 → 05/04	**CT6KMR**		Copper	0.8	04
	99	RFR (DEW10J4)	01/99 → 10/00	**7LPR**		Nickel	0.8	04
	99	RFR (DEW10J4)	01/99 → 08/00	**CT6KMR**		Copper	0.8	04
	100	RFN (EW10J4)	08/00 → 06/04	**CT5KHMR11**		Copper	1.1	04
2.0 16V HPi	103	RLZ (EW10D)	05/01 → 05/04	**CT5KHMR11**		Copper	1.1	04
2.0 Turbo	108	RGX (XU10J2TE)	04/96 → 05/04	**D6KMR**		Copper	0.9	04
2.2	116	3FZ (EW12J4)	07/00 → 05/04	**CT5KHMR11**		Copper	1.1	04
3.0 24V	140	XFZ (ES9J4)	10/96 → 05/04	**D6KMR**		Copper	0.9	06
	143	XFZ (ES9J4)	01/98 → 06/99	**D6KMR**		Copper	0.9	06

	kW					CORE		QTY
PEUGEOT								
406 Coupé								
2.0 16V	99	RFV (XU10J4R)	04/99 → 09/04	**CT6KMR**		Copper	0.8	04
	100	RFN (EW10J4)	10/00 → 12/04	**CT5KHMR11**		Copper	1.1	04
	100	RFV (XU10J4R)	10/00 → 12/04	**CT6KMR**		Copper	0.8	04
2.2	116	3FZ (EW12J4)	03/02 → 12/04	**D6KMR**		Copper	0.9	04
3.0 24V	143	XFZ (ES9J4)	05/97 →	**D6KMR**		Copper	0.9	06
3.0 V6 24V	140	XFZ (ES9J4)	03/97 → 12/04	**D6KMR**		Copper	0.9	06
407								
1.8	85	6FZ (EW7J4)	05/04 →	**CT5KHMR11**		Copper	1.1	04
1.8 16V	92	6FY (EW7A)	09/05 →	**CT5KHMR11**	→ 12/09	Copper	1.1	04
2.0	100	RFN (EW10J4)	05/04 →	**CT5KHMR11**	→ 10/05	Copper	1.1	04
2.0 16V	103	RFJ (EW10A)	09/05 →	**CT5KHMR11**	→ 12/09	Copper	1.1	04
2.0 Allure Bioflex	103	RFJ (EW10A)	01/08 →	**CT5KHMR11**		Copper	1.1	04
2.0 Bioflex	103	RFJ (EW10A)	09/07 →	**CT5KHMR11**		Copper	1.1	04
2.2	116	3FZ (EW12J4)	05/04 →	**CT5KHMR11**	→ 10/05	Copper	1.1	04
2.2 16V	120	3FY (EW12J4)	09/05 →	**CT5KHMR11**	→ 03/09	Copper	1.1	04
407 Break								
2.2	116	3FZ (EW12J4)	05/04 →	**CT5KHMR11**		Copper	1.1	04
504								
1.8	53	XM7	07/87 → 12/89	**CT6FM**		Copper	0.8	04
605								
2.0	89	RFZ (XU10J2Z)	06/89 → 09/99	**CT6KMMR**		Copper	0.8	04
2.0 16V	97	RFV (XU10J4R)	07/94 → 09/99	**D6KMR**		Copper	0.9	04
2.0 Turbo	104	RGY (XU10J2TE)	07/94 → 09/99	**D6KMR**		Copper	0.9	04
	108	RGX (XU10J2TE)	07/91 → 09/99	**D6KMR**		Copper	0.9	04
3.0 V6	140	XFZ (ES9J4)	04/97 → 09/99	**D6KMR**		Copper	0.9	06
607								
2.0	100	RFN (EW10J4)	02/00 →	**CT5KHMR11**	→ 09/04	Copper	1.1	04
2.2 16V	116	3FZ (EW12J4)	02/00 →	**CT5KHMR11**	→ 10/05	Copper	1.1	04
	120	3FY (EW12J4)	09/05 →	**CT5KHMR11**	→ 11/07	Copper	1.1	04
806								
1.8	73	LFW (XU7JP)	07/95 → 08/02	**D6KMR**		Copper	0.9	04
2.0	89	RFU (XU10J2)	06/94 → 08/02	**D6KMR**		Copper	0.9	04
2.0 16V	97	RFV (XU10J4R)	05/98 → 09/00	**D6KMR**		Copper	0.9	04
	100	RFN (EW10J4)	09/00 → 08/02	**CT5KHMR11**		Copper	1.1	04
2.0 S Turbo	108	RGX (XU10J2TE)	06/94 → 08/02	**D6KMR**		Copper	0.9	04
2.0 Turbo	108	RGX (XU10J2TE)	06/94 → 08/02	**D6KMR**		Copper	0.9	04
807								
2.0	100	RFN (EW10J4)	06/02 →	**CT5KHMR11**	→ 10/05	Copper	1.1	04
2.0 16V	103	RFJ (EW10A)	09/05 →	**CT5KHMR11**		Copper	1.1	04
2.2	116	3FZ (EW12J4)	06/02 →	**CT5KHMR11**	→ 09/05	Copper	1.1	04

	kW					CORE		QTY
PEUGEOT								
1007								
1.4	54	KFV (TU3A)	04/05 →	**7LPR**	→ 07/10	Nickel	0.8	04
	54	KFV (TU3JP)	04/05 →	**7LPR**	→ 07/10	Nickel	0.8	04
	54	KFV (TU3A)	04/05 →	**CT6KMR**	→ 07/10	Copper	0.8	04
1.4 16V	65	KFU (ET3J4)	10/05 →	**CT5LDMR9**	→ 07/07	Copper	0.9	04
1.6 16V	80	NFU (TU5JP4)	04/05 →	**CT5KHMR11**		Copper	1.1	04
BIPPER								
1.4	54	KFV (TU3A)	02/08 →	**7LPR**		Nickel	0.8	04
	54	KFV (TU3A)	02/08 →	**CT6KMR**		Copper	0.8	04
BOXER								
2.0	81	RFL (XU10J2U)	12/01 → 04/02	**7LPR**		Nickel	0.8	04
	81	RFL (XU10J2U)	12/01 → 04/02	**CT6KMR**		Copper	0.8	04
	81	RFL (XU10J2U)	04/02 →	**7LPR**	→ 06/06	Nickel	0.8	04
	81	RFL (XU10J2U)	04/02 →	**CT6KMR**	→ 06/06	Copper	0.8	04
2.0 i	80	RFW (XU10J2)	03/94 → 04/02	**CT6KMMR**	→ 03/95	Copper	0.8	04
2.0 i 4x4	80	RFW (XU10J2)	08/96 → 04/02	**D6KMR**		Copper	0.9	04
EXPERT								
1.8	74	LFZ (XU7JP)	10/96 → 09/00	**CT5KHMR11**		Copper	1.1	04
2.0	100	RFN (EW10J4)	07/00 →	**CT5KHMR11**		Copper	1.1	04
2.0 16V	103	RFJ (EW10A)	01/07 →	**CT5KHMR11**		Copper	1.1	04
	103	RFH (EW10A)	01/07 →	**CT5KHMR11**		Copper	1.1	04
GRAND RAPID								
1.1	44	HDZ (TU1M)	06/96 →	**D6KMR**		Copper	0.9	04
	44	HFX (TU1JP)	06/96 →	**D6KMR**		Copper	0.9	04
1.4	54	KFW (TU3JP)	11/02 → 10/06	**CT6KMR**		Copper	0.8	04
	55	TU32	06/96 →	**CT6KMMR**		Copper	0.8	04
	55	KFW (TU3JP)	06/96 →	**CT6KMMR**		Copper	0.8	04
	55	KFX (TU3JP)	06/96 →	**CT6KMMR**		Copper	0.8	04
1.6	66	NFR (TU5JP4B)	04/08 →	**CT5KHMR11**		Copper	1.1	04
	80	NFU (TU5JP4)	04/08 →	**CT5KHMR11**		Copper	1.1	04
	81	NFU (TU5JP4)	09/08 →	**CT5KHMR11**		Copper	1.1	04
1.6 16V	80	NFU (TU5JP4)	07/01 →	**CT5KHMR11**		Copper	1.1	04
1.8	66	LFX (XU7JB)	05/97 →	**D6KMR**	→ 08/00	Copper	0.9	04
J5								
2.0	62	170D (XN1TACP)	09/90 → 01/94	**CW7LP**		Nickel	0.8	04
	62	XN1TA	09/90 → 01/94	**CW7LP**		Nickel	0.8	04
	62	170D (XN1TACP)	10/90 → 02/94	**CT6KMMR**		Copper	0.8	04
	62	XN1TA	09/90 → 01/94	**CT6FM**		Copper	0.8	04
PARTNER								
1.1	44	HDZ (TU1M)	06/96 →	**D6KMR**		Copper	0.9	04
	44	HFX (TU1JP)	06/96 →	**D6KMR**		Copper	0.9	04

	kW					CORE		QTY
PEUGEOT								
PARTNER								
1.4	55	TU32	06/96 →	**CT6KMMR**		Copper	0.8	04
	54	KFW (TU3JP)	11/02 → 10/06	**CT6KMR**		Copper	0.8	04
	54	KFV (TU3A)	11/02 → 10/06	**CT6KMR**		Copper	0.8	04
	54	KFW (TU3JP)	11/02 → 10/06	**7LPR**		Nickel	0.8	04
	54	KFV (TU3A)	11/02 → 10/06	**7LPR**		Nickel	0.8	04
	55	KFW (TU3JP)	06/96 →	**CT6KMMR**		Copper	0.8	04
	55	TU32	06/96 →	**D6KMR**		Copper	0.9	04
1.4 BiFuel	55	KFW (TU3JP)	04/03 →	**CT6KMR**	→ 05/08	Copper	0.8	04
	55	KFW (TU3JP)	04/03 →	**7LPR**	→ 05/08	Nickel	0.8	04
1.6	66	NFR (TU5JP4B)	04/08 →	**CT5KHMR11**		Copper	1.1	04
	81	NFU (TU5JP4)	09/08 →	**CT5KHMR11**		Copper	1.1	04
1.6 16V	80	NFU (TU5JP4)	07/01 →	**CT5KHMR11**		Copper	1.1	04
1.8	66	LFX (XU7JB)	05/97 →	**D6KMR**	→ 08/00	Copper	0.9	04
RANCH								
1.4	54	KFV (TU3A)	11/02 → 10/06	**7LPR**		Nickel	0.8	04
1.4 BiFuel	55	KFW (TU3JP)	04/03 →	**7LPR**	→ 05/08	Nickel	0.8	04
1.6	66	NFR (TU5JP4B)	04/08 →	**CT5KHMR11**		Copper	1.1	04
	80	NFU (TU5JP4)	04/08 →	**CT5KHMR11**		Copper	1.1	04
	81	NFU (TU5JP4)	09/08 →	**CT5KHMR11**		Copper	1.1	04
RANCH Furgonato								
1.1	44	HDZ (TU1M)	06/96 →	**D6KMR**		Copper	0.9	04
1.4	54	KFV (TU3A)	11/02 → 10/06	**CT6KMR**		Copper	0.8	04
	55	TU32	06/96 →	**D6KMR**		Copper	0.9	04
	55	KFX (TU3JP)	06/96 →	**D6KMR**		Copper	0.9	04
1.4 BiFuel	55	KFW (TU3JP)	04/03 →	**CT6KMR**	→ 05/08	Copper	0.8	04
1.6	80	NFU (TU5JP4)	09/00 → 10/02	**CT5KHMR11**		Copper	1.1	04
RANCH MPV / Space wagon								
1.1	44	HFX (TU1JP)	06/96 →	**D6KMR**		Copper	0.9	04
1.4	54	KFW (TU3JP)	11/02 → 10/06	**CT6KMR**		Copper	0.8	04
	55	KFX (TU3JP)	06/96 →	**CT6KMMR**		Copper	0.8	04
	55	TU32	06/96 →	**CT6KMMR**		Copper	0.8	04
	55	KFW (TU3JP)	06/96 →	**CT6KMMR**		Copper	0.8	04
1.6 16V	80	NFU (TU5JP4)	07/01 →	**CT5KHMR11**		Copper	1.1	04
1.8	66	LFX (XU7JB)	05/97 →	**D6KMR**	→ 08/00	Copper	0.9	04
PIAGGIO								
APE TRUCK								
1.0	33	CB41	02/93 → 06/94	**CW7LPR**		Nickel	0.8	03
	35	CB42	07/94 →	**CW7LPR**		Nickel	0.8	03
	35	CB42	07/94 →	**CT6FMR**		Copper	0.8	03
	33	CB41	02/93 → 06/94	**CT6FMR**		Copper	0.8	03

	kW					CORE		QTY
PIAGGIO								
PORTER								
1.0	35	CB42	07/94 → 07/02	**CT6FMR**		Copper	0.8	03
	33	CB41	02/93 → 05/98	**CT6FMR**		Copper	0.8	03
	33	CB41	02/93 → 05/98	**CW7LPR**		Nickel	0.8	03
	35	CB42	07/94 → 07/02	**CW7LPR**		Nickel	0.8	03
PORSCHE								
911 (996)								
3.4 Carrera	221	M 96.01	09/97 → 09/01	**D6KMR**		Copper	0.9	06
	221	M 96.04	09/97 → 09/01	**D6KMR**		Copper	0.9	06
	235	M 96.02	05/01 → 08/05	**D6KMR**		Copper	0.9	06
3.4 Carrera 4	221	M 96.02	02/98 → 09/01	**D6KMR**		Copper	0.9	06
	221	M 96.04	09/97 → 09/01	**D6KMR**		Copper	0.9	06
	221	M 96.01	09/97 → 09/01	**D6KMR**		Copper	0.9	06
	235	M 96.02	05/01 → 08/05	**D6KMR**		Copper	0.9	06
3.6 GT3	280	M 96.79	03/03 → 08/05	**CT7DKMR**	→ 12/03	Copper	0.8	06
944								
2.5	118	M 44.09	08/87 → 12/90	**CW7LPR**		Nickel	0.8	04
	118	M 44.05	08/87 → 12/90	**CW7LPR**		Nickel	0.8	04
	118	M 44.10	08/87 → 12/90	**CW7LPR**		Nickel	0.8	04
	118	M 44.09	08/87 → 12/90	**CT6FMR**		Copper	0.8	04
	118	M 44.05	08/87 → 12/90	**CT6FMR**		Copper	0.8	04
	118	M 44.10	08/87 → 12/90	**CT6FMR**		Copper	0.8	04
968								
3.0	176	M 44.44	06/91 → 11/95	**CJT6FMR**		Copper	0.8	04
	176	M 44.43	06/91 → 11/95	**CJT6FMR**		Copper	0.8	04
BOXSTER (986)								
2.7	162	M 96.22	08/99 → 07/02	**YJT6KMR**		Copper	1.0	06
	168	M 96.23	07/02 → 12/04	**YJT6KMR**		Copper	1.0	06
S 3.2	191	M 96.24	07/02 → 12/04	**YJT6KMR**		Copper	1.0	06
	185	M 96.21	08/99 → 07/02	**YJT6KMR**		Copper	1.0	06
	196	M 96.24	01/04 → 12/04	**YJT6KMR**		Copper	1.0	06
CAYENNE (9PA)								
3.2	184	M02.2Y	10/03 → 09/07	**YJT6KMR**	→ 12/06	Copper	1.0	06
S 4.5	250	M 48.00	09/02 → 09/07	**YJT6KMR**	→ 12/06	Copper	1.0	08
PROTON								
AEROBACK								
1.3	50	4 G 13	01/91 → 09/93	**CT6FMR**		Copper	0.8	04
	55	4 G 13	10/88 → 11/96	**CT6FMR**		Copper	0.8	04
1.5	55	4 G 15	01/91 → 09/93	**CT6FMR**		Copper	0.8	04
1.6 EX	70	4 G 92	10/88 → 11/96	**CT6KMR11**		Copper	1.1	04
ARENA Pick-up								
1.5	64	4 G 15	05/02 →	**CT5FMR**		Copper	0.8	04

	kW					CORE		QTY
PROTON								
COMPACT								
1.5	64	4 G 15	07/00 →	**CT5FMR**		Copper	0.8	04
IMPIAN								
1.6	76	4 G 18 P	09/01 →	**CT6KMR11**		Copper	1.1	04
ISWARA								
1.3	55	4 G 13	10/88 → 11/96	**CT6FMR**		Copper	0.8	04
	50	4 G 13	01/91 → 09/93	**CT6FMR**		Copper	0.8	04
1.5	55	4 G 15	01/91 → 09/93	**CT6FMR**		Copper	0.8	04
1.6 EX	70	4 G 92	10/88 → 11/96	**CT6KMR11**		Copper	1.1	04
JUMBUCK Pick-up								
1.5	64	4 G 15	05/02 →	**CT5FMR**		Copper	0.8	04
MPI								
1.3	50	4 G 13	01/91 → 09/93	**CT6FMR**		Copper	0.8	04
	55	4 G 13	10/88 → 11/96	**CT6FMR**		Copper	0.8	04
1.5	55	4 G 15	01/91 → 09/93	**CT6FMR**		Copper	0.8	04
1.6 EX	70	4 G 92	10/88 → 11/96	**CT6KMR11**		Copper	1.1	04
PERSONA								
1.3	55	G 13 B	03/96 →	**CW7LPR**		Nickel	0.8	04
	55	G 13 B	03/96 →	**CT6FMR**		Copper	0.8	04
1.5	64	G 15 B	09/96 →	**CW7LPR**		Nickel	0.8	04
	64	G 15 B	09/96 →	**CT6FMR**		Copper	0.8	04
1.6	83	4 G 92	03/96 →	**CT6KMR11**		Copper	1.1	04
1.6 Sprint	70	4 G 92	03/96 →	**CT6KMR11**		Copper	1.1	04
313i	55	G 13 B	03/96 →	**CT6FMR**		Copper	0.8	04
	55	G 13 B	03/96 →	**CW7LPR**		Nickel	0.8	04
315 GLSi	64	G 15 B	09/96 →	**CW7LPR**		Nickel	0.8	04
	64	G 15 B	09/96 →	**CT6FMR**		Copper	0.8	04
316	70	4 G 92	03/96 →	**CT6KMR11**		Copper	1.1	04
316 GLXi	83	4 G 92	03/96 →	**CT6KMR11**		Copper	1.1	04
PERSONA 400								
1.6	70	4 G 92	12/95 →	**CT6KMR11**		Copper	1.1	04
1.8	85	4 G 93 (DOHC)	05/96 →	**CT6KMR11**		Copper	1.1	04
416	70	4 G 92	08/00 → 02/02	**CT6KMR11**		Copper	1.1	04
416 GLXi	83	4 G 92	01/94 →	**CT6KMR11**		Copper	1.1	04
416 i	70	4 G 92	12/95 →	**CT6KMR11**		Copper	1.1	04
418	85	4 G 93 (DOHC)	05/96 →	**CT6KMR11**		Copper	1.1	04
418 GLXi	85	4 G 93 (DOHC)	05/96 →	**CT6KMR11**		Copper	1.1	04
SAGA								
1.3 GLS 12V	50	4 G 13	01/91 → 06/96	**CW7LPR**		Nickel	0.8	04
	50	4 G 13	01/91 → 06/96	**CT6FMR**		Copper	0.8	04
1.5 GLS 12V	55	4 G 15	01/91 → 06/96	**CW7LPR**		Nickel	0.8	04
	55	4 G 15	01/91 → 06/96	**CT6FMR**		Copper	0.8	04
SALOON								
1.3	50	4 G 13	01/91 → 09/93	**CT6FMR**		Copper	0.8	04
1.5	55	4 G 15	01/91 → 09/93	**CT6FMR**		Copper	0.8	04

	kW					CORE		QTY
PROTON								
SATRIA								
1.3	55	G 13 B	03/96 →	**CT6FMR**		Copper	0.8	04
	55	G 13 B	03/96 →	**CW7LPR**		Nickel	0.8	04
1.5	64	4 G 15	07/00 →	**CT5FMR**		Copper	0.8	04
	64	G 15 B	09/96 →	**CT6FMR**		Copper	0.8	04
	64	G 15 B	09/96 →	**CW7LPR**		Nickel	0.8	04
1.6	83	4 G 92	03/96 →	**CT6KMR11**		Copper	1.1	04
1.6 Sprint	70	4 G 92	03/96 →	**CT6KMR11**		Copper	1.1	04
313i	55	G 13 B	03/96 →	**CT6FMR**		Copper	0.8	04
	55	G 13 B	03/96 →	**CW7LPR**		Nickel	0.8	04
315 GLSi	64	G 15 B	09/96 →	**CT6FMR**		Copper	0.8	04
	64	G 15 B	09/96 →	**CW7LPR**		Nickel	0.8	04
316	70	4 G 92	03/96 →	**CT6KMR11**		Copper	1.1	04
316 GLXi	83	4 G 92	03/96 →	**CT6KMR11**		Copper	1.1	04
WAJA								
1.6	76	4 G 18 P	09/01 →	**CT6KMR11**		Copper	1.1	04
WIRA								
1.3	55	4 G 13	08/00 →	**CT5FMR**		Copper	0.8	04
1.5	64	4 G 15	08/00 →	**CT5FMR**		Copper	0.8	04
1.6	70	4 G 92	08/00 → 02/02	**CT6KMR11**		Copper	1.1	04
	83	4 G 92	01/94 →	**CT6KMR11**		Copper	1.1	04
1.8	85	4 G 93 (DOHC)	05/96 →	**CT6KMR11**		Copper	1.1	04
416	70	4 G 92	08/00 → 02/02	**CT6KMR11**		Copper	1.1	04
416 GLXi	83	4 G 92	01/94 →	**CT6KMR11**		Copper	1.1	04
416 i	70	4 G 92	12/95 →	**CT6KMR11**		Copper	1.1	04
418	85	4 G 93 (DOHC)	05/96 →	**CT6KMR11**		Copper	1.1	04
418 GLXi	85	4 G 93 (DOHC)	05/96 →	**CT6KMR11**		Copper	1.1	04
RENAULT								
4								
1.0	25	C1C 708	06/87 → 12/93	**CT6FMR**	08/90 → 01/92	Copper	0.8	04
	25	C1C 708	06/87 → 12/93	**CW7LPR**	08/90 → 01/92	Nickel	0.8	04
1.0 (112C)	25	C1C 708	06/87 → 06/93	**CT6FMR**	→ 01/92	Copper	0.8	04
19								
1.4 (L532, L53P)	43	C2J 772	07/88 → 04/92	**CT5FMR**		Copper	0.8	04
	43	C3J 710	07/88 → 04/92	**CT5FMR**		Copper	0.8	04
1.4 Cat (B/C532)	43	C3J 710	01/89 → 04/92	**CT5FMR**		Copper	0.8	04
1.7	55	F2N 724	07/91 → 04/92	**CT6FMR**		Copper	0.8	04
	55	F2N 724	07/91 → 04/92	**CW7LPR**		Nickel	0.8	04
1.7 (B/C53B)	54	F3N 741	09/88 → 04/92	**CT6FMR**		Copper	0.8	04
	54	F3N 740	09/88 → 04/92	**CT6FMR**		Copper	0.8	04
	54	F3N 740	09/88 → 04/92	**CW7LPR**		Nickel	0.8	04
	54	F3N 741	09/88 → 04/92	**CW7LPR**		Nickel	0.8	04

	kW					CORE		QTY
RENAULT								
19								
1.7 (L53B)	54	F3N 741	10/89 → 04/92	**CT6FMR**		Copper	0.8	04
	54	F3N 740	10/89 → 04/92	**CT6FMR**		Copper	0.8	04
	54	F3N 740	10/89 → 04/92	**CW7LPR**		Nickel	0.8	04
	54	F3N 741	10/89 → 04/92	**CW7LPR**		Nickel	0.8	04
1.8 16V (B/C53D)	99	F7P 704	06/89 → 04/92	**YJT6KMR**		Copper	1.0	04
1.8 16V (D53D)	101	F7P 704	07/91 → 04/92	**YJT6KMR**		Copper	1.0	04
	101	F7P 700	07/91 → 04/92	**YJT6KMR**		Copper	1.0	04
1.8 16V (L53D)	99	F7P 704	10/89 → 04/92	**YJT6KMR**		Copper	1.0	04
19 II								
1.4	59	E7J 706	10/94 → 11/95	**7LPR**		Nickel	0.8	04
	59	E7J 706	10/94 → 11/95	**CT6KMR**		Copper	0.8	04
1.4 (532)	43	C3J 710	04/92 → 12/95	**CT5FMR**		Copper	0.8	04
1.4 (B/C532)	43	C3J 710	04/92 → 12/95	**CT5FMR**		Copper	0.8	04
1.7	55	F3N 740	05/92 → 11/95	**CT6FMR**		Copper	0.8	04
	55	F3N 741	05/92 → 11/95	**CT6FMR**		Copper	0.8	04
1.7 (B/C53B)	54	F3N 740	04/92 → 12/95	**CT6FMR**		Copper	0.8	04
	54	F3N 741	04/92 → 12/95	**CT6FMR**		Copper	0.8	04
	54	F3N 740	04/92 → 12/95	**CW7LPR**		Nickel	0.8	04
	54	F3N 741	04/92 → 12/95	**CW7LPR**		Nickel	0.8	04
1.7 (L53B)	54	F3N 741	04/92 → 12/95	**CT6FMR**		Copper	0.8	04
	54	F3N 740	04/92 → 12/95	**CT6FMR**		Copper	0.8	04
1.8	79	F3P 700	05/92 → 11/95	**CT6FMR**		Copper	0.8	04
	67	F3P 765	05/92 → 09/94	**CT6FM**		Copper	0.8	04
	79	F3P 706	05/92 → 11/95	**CT6FMR**		Copper	0.8	04
1.8 (453A/F)	66	F3P 760	04/92 → 12/95	**CT6FM**	→ 09/94	Copper	0.8	04
	66	F3P 706	04/92 → 12/95	**CT6FM**	→ 09/94	Copper	0.8	04
1.8 (5/353F, B/C538)	79	F3P 765	05/94 → 12/95	**CT6FMR**		Copper	0.8	04
	79	F3P 682	05/94 → 12/95	**CW7LPR**		Nickel	0.8	04
	79	F3P 765	05/94 → 12/95	**CW7LPR**		Nickel	0.8	04
	79	F3P 682	05/94 → 12/95	**CT6FMR**		Copper	0.8	04
1.8 (B/C538)	81	F3P 700	04/92 → 05/94	**CW7LPR**		Nickel	0.8	04
	81	F3P 700	04/92 → 05/94	**CT6FMR**		Copper	0.8	04
1.8 (D53V, 853F, D53C)	79	F3P 764	07/94 → 06/96	**CT6FMR**		Copper	0.8	04
	79	F3P 765	07/94 → 06/96	**CT6FMR**		Copper	0.8	04
	79	F3P 682	07/94 → 06/96	**CT6FMR**		Copper	0.8	04
1.8 (D53Y)	65	F3P 704	04/92 → 06/96	**CT6FMR**		Copper	0.8	04
	65	F3P 760	04/92 → 06/96	**CT6FMR**		Copper	0.8	04
	65	F3P 708	04/92 → 06/96	**CT6FMR**		Copper	0.8	04
	65	F3P 707	04/92 → 06/96	**CT6FMR**		Copper	0.8	04
	65	F3P 706	04/92 → 06/96	**CT6FMR**		Copper	0.8	04
	65	F3P 705	04/92 → 06/96	**CT6FMR**		Copper	0.8	04
1.8 (L538)	81	F3P 700	04/92 → 05/94	**CT6FMR**		Copper	0.8	04
1.8 (L53V, L538)	79	F3P 682	05/94 → 12/95	**CT6FMR**		Copper	0.8	04

	kW					CORE		QTY
RENAULT								
19 II								
1.8 (L53Y)	65	F3P 760	04/92 → 12/95	**CT6FMR**		Copper	0.8	04
	65	F3P 704	04/92 → 12/95	**CT6FMR**		Copper	0.8	04
	65	F3P 706	04/92 → 12/95	**CT6FMR**		Copper	0.8	04
	65	F3P 707	04/92 → 12/95	**CT6FMR**		Copper	0.8	04
	65	F3P 708	04/92 → 12/95	**CT6FMR**		Copper	0.8	04
	65	F3P 705	04/92 → 12/95	**CT6FMR**		Copper	0.8	04
1.8 16V	101	F7P 704	05/92 → 04/94	**YJT6KMR**		Copper	1.0	04
1.8 16V (D53D)	99	F7P 704	04/92 → 06/96	**YJT6KMR**		Copper	1.0	04
21								
1.4 (B48D)	51	C2J 770	09/89 → 05/93	**CT6FMR**	→ 04/92	Copper	0.8	04
1.4 (L48D)	51	C2J 770	06/88 → 10/93	**CW7LPR**		Nickel	0.8	04
1.7 (B48F)	54	F3N 726	09/89 → 10/92	**CT6FMR**		Copper	0.8	04
	54	F3N 726	09/89 → 10/92	**CW7LPR**		Nickel	0.8	04
1.7 (L48N)	64	F2N 752	06/87 → 04/89	**CT6FMR**		Copper	0.8	04
	64	F2N 752	06/87 → 04/89	**CW7LPR**		Nickel	0.8	04
1.7 Cat (K48F)	54	F3N 726	05/88 → 06/93	**CT6FMR**	09/89 →	Copper	0.8	04
	54	F3N 726	05/88 → 06/93	**CW7LPR**	09/89 →	Nickel	0.8	04
CLIO								
1.4	57	E6J 760	05/90 → 02/98	**7LPR**		Nickel	0.8	04
	57	E6J 713	05/90 → 02/98	**7LPR**		Nickel	0.8	04
	57	E6J 712	05/90 → 02/98	**7LPR**		Nickel	0.8	04
1.4 16V	72	K4J 780	02/10 →	**7LPR**		Nickel	0.8	04
1.6 16V	79	K4M 740	04/02 →	**7LPR**	→ 09/08	Nickel	0.8	04
1.6 16V (KR0B)	82	K4M 800	02/08 →	**7LPR**		Nickel	0.8	04
	82	K4M 801	02/08 →	**7LPR**		Nickel	0.8	04
1.8	70	F3P 710	01/91 → 09/98	**CW7LPR**		Nickel	0.8	04
1.8 (B/C578)	66	F3P 755	08/94 → 09/98	**CW7LP**		Nickel	0.8	04
	66	F3P 754	08/94 → 09/98	**CW7LP**		Nickel	0.8	04
1.8 (B/C57C, B/C57U)	65	F3P 714	01/91 → 09/98	**CW7LPR**		Nickel	0.8	04
	65	F3P 710	01/91 → 09/98	**CW7LPR**		Nickel	0.8	04
1.8 Rsi (B/C579)	80	F3P 712	01/93 → 08/95	**CW7LPR**		Nickel	0.8	04
CLIO I								
1.1	34	C1E 700	01/91 → 09/98	**CT5FMR**		Copper	0.8	04
1.2	43	D7F 744	02/98 → 10/03	**CT5LDMR9**		Copper	0.9	04
	43	D7F 746	02/98 → 10/03	**CT5LDMR9**		Copper	0.9	04
1.2 (B/C/S577)	40	C3G 720	01/96 → 12/96	**CT5FMR**		Copper	0.8	04
1.2 16V	55	D4F 706	04/02 →	**CT5LDMR9**		Copper	0.9	04
	55	D4F 712	04/02 →	**CT5LDMR9**		Copper	0.9	04
1.4	55	K7J 700	08/00 →	**D6KMR**		Copper	0.9	04
	57	E6J 713	05/90 → 02/98	**CT6KMR**		Copper	0.8	04
	57	E6J 760	05/90 → 02/98	**CT6KMR**		Copper	0.8	04
	57	E6J 712	05/90 → 02/98	**CT6KMR**		Copper	0.8	04
1.4 16V	72	K4J 712	08/00 →	**D6KMR**		Copper	0.9	04
1.6	66	K7M 746	03/98 →	**D6KMR**		Copper	0.9	04

	kW					CORE		QTY
RENAULT								
CLIO I								
1.6 16V	79	K4M 740	04/02 →	**CT6KMR**	→ 09/08	Copper	0.8	04
1.8	70	F3P 710	01/91 → 09/98	**CT6FMR**		Copper	0.8	04
1.8 (B/C578)	66	F3P 755	08/94 → 09/98	**CT6FM**		Copper	0.8	04
	66	F3P 754	08/94 → 09/98	**CT6FM**		Copper	0.8	04
1.8 (B/C57C, B/C57U)	65	F3P 714	01/91 → 09/98	**CT6FMR**		Copper	0.8	04
	65	F3P 710	01/91 → 09/98	**CT6FMR**		Copper	0.8	04
1.8 16V (C57D)	99	F7P 722	01/91 → 03/96	**YJT6KMR**		Copper	1.0	04
1.8 Rsi (B/C579)	80	F3P 712	01/93 → 08/95	**CT6FMR**		Copper	0.8	04
CLIO II								
1.1 (SB0A, SB0F, SB1K, SB2D)	43	D7F 746	09/98 →	**D6KMR**		Copper	0.9	04
	43	D7F 720	09/98 →	**D6KMR**		Copper	0.9	04
	43	D7F 726	09/98 →	**D6KMR**		Copper	0.9	04
1.2 (BB0A, BB0F, BB10, BB1K, BB28, BB2D, BB2H, CB0A...)	43	D7F 764	09/98 →	**D6KMR**		Copper	0.9	04
	43	D7F 726	09/98 →	**D6KMR**		Copper	0.9	04
	43	D7F 746	09/98 →	**D6KMR**		Copper	0.9	04
	43	D7F 766	09/98 →	**D6KMR**		Copper	0.9	04
	43	D7F 722	09/98 →	**D6KMR**		Copper	0.9	04
	43	D7F 710	09/98 →	**D6KMR**		Copper	0.9	04
	43	D7F 720	09/98 →	**D6KMR**		Copper	0.9	04
1.2 (BB0A, CB0A)	44	D7F 722	03/99 → 05/01	**D6KMR**		Copper	0.9	04
1.2 (SB0A, SB0F, SB10)	44	D7F 722	03/99 → 10/03	**D6KMR**		Copper	0.9	04
	44	D7F 726	03/99 → 10/03	**D6KMR**		Copper	0.9	04
	44	D7F 746	03/99 → 10/03	**D6KMR**		Copper	0.9	04
1.2 16V (BB05, BB0W, BB11, BB27, BB2T, BB2U, BB2V, CB05...)	55	D4F 712	06/01 →	**CT5LDMR9**		Copper	0.9	04
	55	D4F 706	06/01 →	**CT5LDMR9**		Copper	0.9	04
	55	D4F 728	06/01 →	**CT5LDMR9**		Copper	0.9	04
	55	D4F 722	06/01 →	**CT5LDMR9**		Copper	0.9	04
	55	D4F 714	06/01 →	**CT5LDMR9**		Copper	0.9	04
1.2 LPG	43	D7F 764	09/98 → 06/09	**D6KMR**	→ 10/07	Copper	0.9	04
	43	D7F 766	09/98 → 06/09	**D6KMR**	→ 10/07	Copper	0.9	04
1.4 (B/CB0C)	55	E7J 780	09/98 → 05/05	**D6KMR**		Copper	0.9	04
	55	K7J 700	09/98 → 05/05	**D6KMR**		Copper	0.9	04
	55	E7J 634	09/98 → 05/05	**D6KMR**		Copper	0.9	04
1.4 16V (B/CB0L)	70	K4J 712	10/99 → 09/04	**D6KMR**		Copper	0.9	04
	70	K4J 713	10/99 → 09/04	**D6KMR**		Copper	0.9	04
1.4 16V (B/CB0P)	72	K4J 711	08/00 →	**CT6KMR**		Copper	0.8	04
	72	K4J 710	08/00 →	**CT6KMR**		Copper	0.8	04
	72	K4J 713	08/00 →	**CT6KMR**		Copper	0.8	04
	72	K4J 712	08/00 →	**CT6KMR**		Copper	0.8	04
	72	K4J 711	08/00 →	**7LPR**		Nickel	0.8	04
	72	K4J 710	08/00 →	**7LPR**		Nickel	0.8	04
	72	K4J 713	08/00 →	**7LPR**		Nickel	0.8	04
	72	K4J 712	08/00 →	**7LPR**		Nickel	0.8	04

	kW					CORE		QTY
RENAULT								
CLIO II								
1.6 (B/CB0D)	66	K7M 746	09/98 → 05/05	**D6KMR**		Copper	0.9	04
	66	K7M 744	09/98 → 05/05	**D6KMR**		Copper	0.9	04
	66	K7M 745	09/98 → 05/05	**D6KMR**		Copper	0.9	04
1.6 16V (BB01, BB0H, BB0T, BB14, BB1D, BB1R, BB2KL...)	79	K4M 708	09/98 →	**D6KMR**		Copper	0.9	04
	79	K4M 740	09/98 →	**D6KMR**		Copper	0.9	04
	79	K4M 742	09/98 →	**D6KMR**		Copper	0.9	04
	79	K4M 743	09/98 →	**D6KMR**		Copper	0.9	04
	79	K4M 744	09/98 →	**D6KMR**		Copper	0.9	04
	79	K4M 745	09/98 →	**D6KMR**		Copper	0.9	04
	79	K4M 748	09/98 →	**D6KMR**		Copper	0.9	04
1.6 RN/RT (B/CB0D)	66	K7M 745	09/98 → 05/05	**D6KMR**		Copper	0.9	04
	66	K7M 746	09/98 → 05/05	**D6KMR**		Copper	0.9	04
	66	K7M 744	09/98 → 05/05	**D6KMR**		Copper	0.9	04
CLIO III								
1.2 (BR01, BR03, BR0E, CR0E)	57	D4F 764	10/05 →	**CT5LDMR9**		Copper	0.9	04
1.2 16V	43	D4F 764	06/06 → 08/10	**CT5LDMR9**		Copper	0.9	04
	58	D4F 764	06/05 →	**CT5LDMR9**	→ 04/09	Copper	0.9	04
1.2 16V Hi-Flex (BR1U, CR1U)	55	D4F 742	07/08 →	**CT5LDMR9**		Copper	0.9	04
	55	D4F 740	07/08 →	**CT5LDMR9**		Copper	0.9	04
1.2 16V (BR02, BR0J, BR11, CR02, CR0J, CR11)	55	D4F 706	06/05 →	**CT5LDMR9**		Copper	0.9	04
	55	D4F 740	06/05 →	**CT5LDMR9**		Copper	0.9	04
	55	D4F 764	06/05 →	**CT5LDMR9**		Copper	0.9	04
1.2 16V (BR0R, BR1D, BR1L, CR0R)	48	D4F 740	06/05 →	**CT5LDMR9**	→ 04/09	Copper	0.9	04
1.4 16V	72	K4J 780	06/05 →	**CT6KMR**		Copper	0.8	04
	72	K4J 780	06/05 →	**7LPR**		Nickel	0.8	04
1.6 16V (BR05, BR0B, BR0Y, BR15, BR1J, BR1M, BR1Y, CR0B...)	82	K4M 801	06/05 →	**CT6KMR**		Copper	0.8	04
	82	K4M 800	06/05 →	**CT6KMR**		Copper	0.8	04
	82	K4M 801	06/05 →	**7LPR**		Nickel	0.8	04
	82	K4M 800	06/05 →	**7LPR**		Nickel	0.8	04
1.6 16V (BR09, BR0T, CR09, CR0T)	65	K4M 804	06/05 →	**CT6KMR**	→ 04/09	Copper	0.8	04
	65	K4M 804	06/05 →	**7LPR**	→ 04/09	Nickel	0.8	04
CLIO IV								
1.2 16V	54	D4F 728	11/12 →	**CT5LDMR9**		Copper	0.9	04
	54	D4F 740	11/12 →	**CT5LDMR9**		Copper	0.9	04
CLIO Grandtour								
1.2 16V Hi-Flex (KR0S)	55	D4F 740	07/08 →	**CT5LDMR9**	→ 04/09	Copper	0.9	04
1.2 16V (KR02, KR0J)	55	D4F 740	02/08 →	**CT5LDMR9**		Copper	0.9	04

	kW					CORE		QTY
RENAULT								
CLIO Grandtour								
1.2 16V (KR0E)	58	D4F 764	02/08 →	**CT5LDMR9**	→ 04/09	Copper	0.9	04
1.4 16V	72	K4J 780	02/10 →	**CT6KMR**		Copper	0.8	04
1.6 16V (KR0B)	82	K4M 800	02/08 →	**CT6KMR**		Copper	0.8	04
	82	K4M 801	02/08 →	**CT6KMR**		Copper	0.8	04
CLIO Sportour								
1.2 16V Hi-Flex (KR0S)	55	D4F 740	07/08 →	**CT5LDMR9**	→ 04/09	Copper	0.9	04
1.2 16V (KR02, KR0J)	55	D4F 740	02/08 →	**CT5LDMR9**		Copper	0.9	04
1.2 16V (KR0E)	58	D4F 764	02/08 →	**CT5LDMR9**	→ 04/09	Copper	0.9	04
1.4 16V	72	K4J 780	02/10 →	**CT6KMR**		Copper	0.8	04
1.6 16V (KR0B)	82	K4M 800	02/08 →	**CT6KMR**		Copper	0.8	04
	82	K4M 801	02/08 →	**CT6KMR**		Copper	0.8	04
ESPACE III								
2.0	102	F4R 701	09/01 → 10/02	**7LPR**		Nickel	0.8	04
	102	F4R 700	09/01 → 10/02	**7LPR**		Nickel	0.8	04
	102	F4R 701	09/01 → 10/02	**CT6KMR**		Copper	0.8	04
	102	F4R 700	09/01 → 10/02	**CT6KMR**		Copper	0.8	04
2.0 (JE0A)	84	F3R 769	11/96 → 10/00	**CT5FMR**		Copper	0.8	04
	84	F3R 768	11/96 → 10/00	**CT5FMR**		Copper	0.8	04
	84	F3R 742	11/96 → 10/00	**CT5FMR**		Copper	0.8	04
	84	F3R 729	11/96 → 10/00	**CT5FMR**		Copper	0.8	04
	84	F3R 728	11/96 → 10/00	**CT5FMR**		Copper	0.8	04
2.0 16V (JE0N, JE0L, JE02)	103	F4R 701	10/98 → 10/02	**7LPR**		Nickel	0.8	04
	103	F4R 700	10/98 → 10/02	**7LPR**		Nickel	0.8	04
	103	F4R 701	10/98 → 10/02	**CT6KMR**		Copper	0.8	04
	103	F4R 700	10/98 → 10/02	**CT6KMR**		Copper	0.8	04
3.0 (JE0D)	123	Z7X 775	11/96 → 10/98	**D6KMR**		Copper	0.9	06
EXPRESS								
1.1 (F40H)	33	C1E 756	06/87 → 09/91	**CT5FMR**		Copper	0.8	04
1.4	59	E7J 773	05/95 → 08/97	**CT6KMR**		Copper	0.8	04
	59	E7J 773	05/95 → 08/97	**7LPR**		Nickel	0.8	04
EXTRA								
1.1 (F40H)	33	C1E 756	06/87 → 09/91	**CT5FMR**		Copper	0.8	04
1.4	59	E7J 773	05/95 → 08/97	**CT6KMR**		Copper	0.8	04
FLUENCE								
1.6 16V (L301, L30F, L30P, L30R)	81	K4M 838	02/10 →	**7LPR**		Nickel	0.8	04
	81	K4M 839	02/10 →	**7LPR**		Nickel	0.8	04
	81	K4M 839	02/10 →	**CT6KMR**		Copper	0.8	04
	81	K4M 838	02/10 →	**CT6KMR**		Copper	0.8	04

	kW					CORE		QTY
RENAULT								
GRAN TOUR III								
1.6 16V (KZ0H)	74	K4M 848	05/09 →	**7LPR**		Nickel	0.8	04
1.6 16V (KZ0U, KZ1B, KZ1U)	81	K4M 858	05/09 →	**7LPR**		Nickel	0.8	04
1.6 16V (KZ0H)	74	K4M 848	05/09 →	**CT6KMR**		Copper	0.8	04
1.6 16V (KZ0U, KZ1B, KZ1U)	81	K4M 858	05/09 →	**CT6KMR**		Copper	0.8	04
GRAND SCÉNIC II								
1.6	83	K4M 782	04/04 →	**7LPR**	→ 07/08	Nickel	0.8	04
	83	K4M 761	04/04 →	**7LPR**	→ 07/08	Nickel	0.8	04
	83	K4M 782	04/04 →	**CT6KMR**	→ 07/08	Copper	0.8	04
	83	K4M 761	04/04 →	**CT6KMR**	→ 07/08	Copper	0.8	04
2.0	99	F4R 771	04/04 →	**7LPR**	→ 04/09	Nickel	0.8	04
	99	F4R 770	04/04 →	**7LPR**	→ 04/09	Nickel	0.8	04
	120	F4R 776	04/04 →	**7LPR**	→ 07/08	Nickel	0.8	04
	99	F4R 771	04/04 →	**CT6KMR**	→ 04/09	Copper	0.8	04
	99	F4R 770	04/04 →	**CT6KMR**	→ 04/09	Copper	0.8	04
	120	F4R 776	04/04 →	**CT6KMR**	→ 07/08	Copper	0.8	04
GRAND SCÉNIC III								
1.6 16V (JZ0U)	81	K4M 858	02/09 →	**CT6KMR**		Copper	0.8	04
	81	K4M 858	02/09 →	**7LPR**		Nickel	0.8	04
KANGOO								
1.2 (FC01, FC0A, FC0F)	43	D7F 720	08/97 →	**D6KMR**		Copper	0.9	04
	43	D7F 746	08/97 →	**D6KMR**		Copper	0.9	04
	43	D7F 722	08/97 →	**D6KMR**		Copper	0.9	04
	43	D7F 744	08/97 →	**D6KMR**		Copper	0.9	04
	43	D7F 726	08/97 →	**D6KMR**		Copper	0.9	04
	43	D7F 710	08/97 →	**D6KMR**		Copper	0.9	04
1.2 (FC1A)	44	D7F 764	07/98 → 07/01	**D6KMR**		Copper	0.9	04
	44	D7F 766	07/98 → 07/01	**D6KMR**		Copper	0.9	04
1.2 (KC0A, KC0K, KC0F, KC01)	43	D7F 744	08/97 →	**D6KMR**		Copper	0.9	04
	43	D7F 726	08/97 →	**D6KMR**		Copper	0.9	04
	43	D7F 722	08/97 →	**D6KMR**		Copper	0.9	04
	43	D7F 710	08/97 →	**D6KMR**		Copper	0.9	04
	43	D7F 746	08/97 →	**D6KMR**		Copper	0.9	04
	43	D7F 720	08/97 →	**D6KMR**		Copper	0.9	04
1.2 16V (FC05)	55	D4F 712	10/01 →	**CT5LDMR9**		Copper	0.9	04
	55	D4F 730	10/01 →	**CT5LDMR9**		Copper	0.9	04
	55	D4F 714	10/01 →	**CT5LDMR9**		Copper	0.9	04
1.2 16V (KC05, KC06, KC03, KC0T, KC0W, KC1D)	55	D4F 712	06/01 →	**CT5LDMR9**		Copper	0.9	04
	55	D4F 716	06/01 →	**CT5LDMR9**		Copper	0.9	04
	55	D4F 730	06/01 →	**CT5LDMR9**		Copper	0.9	04
	55	D4F 714	06/01 →	**CT5LDMR9**		Copper	0.9	04
1.2 BiFuel	43	D7F 710	07/98 → 07/01	**CT5LDMR9**		Copper	0.9	04
	43	D7F 744	07/98 → 07/01	**CT5LDMR9**		Copper	0.9	04

	kW					CORE		QTY
RENAULT								
KANGOO								
1.4 (FC0C, FC0B, FC0H, FC0M)	55	E7J 634	08/97 →	**CT6KMR**		Copper	0.8	04
	55	E7J 635	08/97 →	**CT6KMR**		Copper	0.8	04
	55	E7J 780	08/97 →	**CT6KMR**		Copper	0.8	04
	55	K7J 701	08/97 →	**CT6KMR**		Copper	0.8	04
1.4 (KC0C, KC0H, KC0B, KC0M)	55	E7J 634	08/97 →	**D6KMR**		Copper	0.9	04
	55	K7J 700	08/97 →	**D6KMR**		Copper	0.9	04
	55	K7J 701	08/97 →	**D6KMR**		Copper	0.9	04
	55	E7J 780	08/97 →	**D6KMR**		Copper	0.9	04
	55	E7J 635	08/97 →	**D6KMR**		Copper	0.9	04
1.6	64	K7M 750	02/08 →	**CT6KMR**		Copper	0.8	04
	66	K7M 746	09/99 → 06/01	**D6KMR**		Copper	0.9	04
1.6 16V	78	K4M 830	02/08 →	**CT6KMR**		Copper	0.8	04
	70	K4M 750	06/01 →	**CT6KMR**		Copper	0.8	04
	70	K4M 706	06/01 →	**CT6KMR**		Copper	0.8	04
	70	K4M 753	06/01 →	**7LPR**		Nickel	0.8	04
	70	K4M 750	06/01 →	**7LPR**		Nickel	0.8	04
	70	K4M 706	06/01 →	**7LPR**		Nickel	0.8	04
	70	K4M 752	06/01 →	**7LPR**		Nickel	0.8	04
	70	K4M 752	06/01 →	**CT6KMR**		Copper	0.8	04
	70	K4M 753	06/01 →	**CT6KMR**		Copper	0.8	04
1.6 16V 4x4 (FC0L, FC0P, FC0S)	70	K4M 750	10/01 →	**CT6KMR**		Copper	0.8	04
	70	K4M 752	10/01 →	**CT6KMR**		Copper	0.8	04
	70	K4M 753	10/01 →	**CT6KMR**		Copper	0.8	04
1.6 16V 4x4 (KC0P, KC0S, KC0L)	70	K4M 750	10/01 →	**CT6KMR**		Copper	0.8	04
	70	K4M 752	10/01 →	**7LPR**		Nickel	0.8	04
	70	K4M 750	10/01 →	**7LPR**		Nickel	0.8	04
	70	K4M 753	10/01 →	**7LPR**		Nickel	0.8	04
	70	K4M 752	10/01 →	**CT6KMR**		Copper	0.8	04
	70	K4M 753	10/01 →	**CT6KMR**		Copper	0.8	04
1.6 16V bivalent	60	K4M 850	06/05 →	**CT6KMR**	→ 12/07	Copper	0.8	04
	60	K4M 850	06/05 →	**7LPR**	→ 12/07	Nickel	0.8	04
RL 1.2 (FC01, FC0A, FC0F)	43	D7F 722	08/97 →	**D6KMR**		Copper	0.9	04
	43	D7F 746	08/97 →	**D6KMR**		Copper	0.9	04
	43	D7F 744	08/97 →	**D6KMR**		Copper	0.9	04
	43	D7F 726	08/97 →	**D6KMR**		Copper	0.9	04
	43	D7F 710	08/97 →	**D6KMR**		Copper	0.9	04
	43	D7F 720	08/97 →	**D6KMR**		Copper	0.9	04
KANGOO / GRAND KANGOO								
1.6 (KW00, KW0Y)	64	K7M 750	02/08 →	**CT6KMR**		Copper	0.8	04
1.6 16V Hi-Flex	78	K4M 834	02/08 →	**CT6KMR**		Copper	0.8	04
	78	K4M 850	02/08 →	**CT6KMR**		Copper	0.8	04
1.6 16V (KW0D)	78	K4M 830	02/08 →	**CT6KMR**		Copper	0.8	04
	78	K4M 831	02/08 →	**CT6KMR**		Copper	0.8	04

	kW					CORE		QTY
RENAULT								
KANGOO BE BOP								
1.6 (KW0D)	78	K4M 830	02/09 →	**CT6KMR**		Copper	0.8	04
LAGUNA I								
1.6 16V (B568, B561)	79	K4M 724	11/97 → 03/01	**D6KMR**		Copper	0.9	04
	79	K4M 720	11/97 → 03/01	**D6KMR**		Copper	0.9	04
1.6 16V (K568)	79	K4M 724	11/97 → 03/01	**D6KMR**		Copper	0.9	04
	79	K4M 720	11/97 → 03/01	**D6KMR**		Copper	0.9	04
1.8	69	F3P 674	06/95 → 02/01	**CW7LPR**		Nickel	0.8	04
	70	F3P 676	06/95 → 06/98	**CW7LPR**		Nickel	0.8	04
	70	F3P 676	06/95 → 06/98	**CT6FMR**		Copper	0.8	04
	69	F3P 674	06/95 → 02/01	**CT6FMR**		Copper	0.8	04
1.8 (B56A/B)	66	F3P 724	11/93 → 03/01	**CW7LPR**		Nickel	0.8	04
	66	F3P 720	11/93 → 03/01	**CW7LPR**		Nickel	0.8	04
	66	F3P 724	11/93 → 03/01	**CT6FMR**		Copper	0.8	04
	66	F3P 720	11/93 → 03/01	**CT6FMR**		Copper	0.8	04
1.8 (B56S/T/0)	66	F3P 678	08/95 → 03/01	**CW7LPR**		Nickel	0.8	04
	66	F3P 670	08/95 → 03/01	**CW7LPR**		Nickel	0.8	04
	66	F3P 678	08/95 → 03/01	**CT6FMR**		Copper	0.8	04
	66	F3P 670	08/95 → 03/01	**CT6FMR**		Copper	0.8	04
1.8 (K56Z)	69	F3P 720	09/95 → 03/01	**CT6FM**		Copper	0.8	04
	69	F3P 724	09/95 → 03/01	**CT6FM**		Copper	0.8	04
1.8 16V (B563, B564)	88	F4P 770	04/98 → 03/01	**D6KMR**		Copper	0.9	04
	88	F4P 760	04/98 → 03/01	**D6KMR**		Copper	0.9	04
2.0	80	F3R 611	03/99 → 03/01	**CW7LPR**		Nickel	0.8	04
	80	F3R 611	03/99 → 03/01	**CT6FMR**		Copper	0.8	04
	84	F3R 768	06/95 → 02/01	**CW7LPR**		Nickel	0.8	04
	84	F3R 722	06/95 → 02/01	**CW7LPR**		Nickel	0.8	04
	84	F3R 768	06/95 → 02/01	**CT6FMR**		Copper	0.8	04
	84	F3R 728	10/98 → 01/01	**CT6FMR**		Copper	0.8	04
	103	N7Q 704	06/95 → 02/01	**YJT6KMR**		Copper	1.0	04
	103	N7Q 700	06/95 → 02/01	**YJT6KMR**		Copper	1.0	04
	84	F3R 722	06/95 → 02/01	**CT6FMR**		Copper	0.8	04
2.0 (556A)	102	F4R 780	09/99 → 02/01	**CT6KMR**		Copper	0.8	04
	102	F4R 780	09/99 → 02/01	**7LPR**		Nickel	0.8	04
2.0 (B56C/H/N)	83	F3R 723	11/93 → 03/01	**CW7LPR**		Nickel	0.8	04
	83	F3R 722	11/93 → 03/01	**CW7LPR**		Nickel	0.8	04
	83	F3R 723	11/93 → 03/01	**CT6FMR**		Copper	0.8	04
	83	F3R 722	11/93 → 03/01	**CT6FMR**		Copper	0.8	04
2.0 (K56C/H)	83	F3R 723	09/95 → 03/01	**CT6FMR**		Copper	0.8	04
	83	F3R 722	09/95 → 03/01	**CT6FMR**		Copper	0.8	04
2.0 16V (556A/B)	103	F4R 780	09/99 → 03/01	**7LPR**		Nickel	0.8	04
	103	F4R 780	09/99 → 03/01	**CT6KMR**		Copper	0.8	04
2.0 16V (A56A/B)	103	F4R 780	09/99 → 03/01	**CT6KMR**		Copper	0.8	04
2.0 16V (B56D/M)	102	N7Q 700	06/95 → 03/01	**YJT6KMR**		Copper	1.0	04
	102	N7Q 704	06/95 → 03/01	**YJT6KMR**		Copper	1.0	04

	kW					CORE		QTY
RENAULT								
LAGUNA I								
2.0 16V (K56D/M)	102	N7Q 704	09/95 → 03/01	**YJT6KMR**		Copper	1.0	04
2.0 RT 16V (K56D/M)	102	N7Q 700	09/95 → 03/01	**YJT6KMR**		Copper	1.0	04
	102	N7Q 704	09/95 → 03/01	**YJT6KMR**		Copper	1.0	04
2.0 RXE (556A)	102	F4R 780	09/99 → 02/01	**CT6KMR**		Copper	0.8	04
	102	F4R 780	09/99 → 02/01	**7LPR**		Nickel	0.8	04
3.0 (K56R, K565)	123	Z7X 765	02/96 → 03/01	**D6KMR**		Copper	0.9	06
3.0 24V (B56V)	140	L7X 700	03/97 → 03/01	**D6KMR**		Copper	0.9	06
3.0 V6 24V (B56V)	140	L7X 701	03/97 → 03/01	**D6KMR**		Copper	0.9	06
LAGUNA II								
1.6 16V (BG0A, BG0L)	79	K4M 714	03/01 →	**7LPR**	→ 09/07	Nickel	0.8	04
	79	K4M 710	03/01 →	**7LPR**	→ 09/07	Nickel	0.8	04
	79	K4M 710	03/01 →	**CT6KMR**	→ 09/07	Copper	0.8	04
	79	K4M 714	03/01 →	**CT6KMR**	→ 09/07	Copper	0.8	04
1.6 16V (BG1G, BG1H)	82	K4M 716	02/05 →	**7LPR**	→ 09/07	Nickel	0.8	04
	82	K4M 716	02/05 →	**CT6KMR**	→ 09/07	Copper	0.8	04
1.6 FlexFuel	76	K4M 718	06/01 → 10/03	**CT6KMR**		Copper	0.8	04
1.8 16V (BG04, BG0B, BG0C, BG0V)	86	F4P 774	03/01 →	**7LPR**	→ 02/05	Nickel	0.8	04
	86	F4P 770	03/01 →	**7LPR**	→ 02/05	Nickel	0.8	04
	86	F4P 774	03/01 →	**CT6KMR**	→ 02/05	Copper	0.8	04
	86	F4P 770	03/01 →	**CT6KMR**	→ 02/05	Copper	0.8	04
1.8 16V (BG06, BG0J, BG0M)	85	F4P 775	03/01 →	**7LPR**	→ 09/07	Nickel	0.8	04
	85	F4P 774	03/01 →	**7LPR**	→ 09/07	Nickel	0.8	04
	85	F4P 773	03/01 →	**7LPR**	→ 09/07	Nickel	0.8	04
	85	F4P 771	03/01 →	**7LPR**	→ 09/07	Nickel	0.8	04
	85	F4P 770	03/01 →	**7LPR**	→ 09/07	Nickel	0.8	04
	85	F4P 773	03/01 →	**CT6KMR**	→ 09/07	Copper	0.8	04
	85	F4P 771	03/01 →	**CT6KMR**	→ 09/07	Copper	0.8	04
	85	F4P 775	03/01 →	**CT6KMR**	→ 09/07	Copper	0.8	04
	85	F4P 774	03/01 →	**CT6KMR**	→ 09/07	Copper	0.8	04
	85	F4P 770	03/01 →	**CT6KMR**	→ 09/07	Copper	0.8	04
1.8 16V (BG0B, BG0C, BG0J, BG0M, BG0V)	89	F4P 772	03/01 →	**7LPR**	→ 09/07	Nickel	0.8	04
	89	F4P 770	03/01 →	**7LPR**	→ 09/07	Nickel	0.8	04
	89	F4P 772	03/01 →	**CT6KMR**	→ 09/07	Copper	0.8	04
	89	F4P 770	03/01 →	**CT6KMR**	→ 09/07	Copper	0.8	04
1.8 16V (BG0B, BG0M)	88	F4P 773	03/01 →	**7LPR**	→ 09/07	Nickel	0.8	04
	88	F4P 770	03/01 →	**7LPR**	→ 09/07	Nickel	0.8	04
	88	F4P 773	03/01 →	**CT6KMR**	→ 09/07	Copper	0.8	04
	88	F4P 770	03/01 →	**CT6KMR**	→ 09/07	Copper	0.8	04
1.8 16V (KG0J)	85	F4P 775	03/01 →	**CT6KMR**	→ 09/07	Copper	0.8	04
	85	F4P 771	03/01 →	**CT6KMR**	→ 09/07	Copper	0.8	04
	85	F4P 774	03/01 →	**CT6KMR**	→ 09/07	Copper	0.8	04

	kW					CORE		QTY
RENAULT								
LAGUNA II								
2.0 16V	98	F4R 714	08/02 →	**7LPR**	→ 09/07	Nickel	0.8	04
	125	F4R 787	01/05 →	**7LPR**	→ 09/07	Nickel	0.8	04
	125	F4R 784	01/05 →	**7LPR**	→ 09/07	Nickel	0.8	04
	125	F4R 786	01/05 →	**7LPR**	→ 09/07	Nickel	0.8	04
	125	F4R 787	01/05 →	**CT6KMR**	→ 09/07	Copper	0.8	04
	98	F4R 714	08/02 →	**CT6KMR**	→ 09/07	Copper	0.8	04
	125	F4R 784	01/05 →	**CT6KMR**	→ 09/07	Copper	0.8	04
	125	F4R 786	01/05 →	**CT6KMR**	→ 09/07	Copper	0.8	04
2.0 16V (BG00, BG0K, BG0P, BG0W)	99	F4R 712	08/02 →	**CT6KMR**		Copper	0.8	04
	99	F4R 713	08/02 →	**7LPR**		Nickel	0.8	04
	99	F4R 712	08/02 →	**7LPR**		Nickel	0.8	04
	99	F4R 715	08/02 →	**7LPR**		Nickel	0.8	04
	99	F4R 714	08/02 →	**7LPR**		Nickel	0.8	04
	99	F4R 713	08/02 →	**CT6KMR**		Copper	0.8	04
	99	F4R 714	08/02 →	**CT6KMR**		Copper	0.8	04
	99	F4R 715	08/02 →	**CT6KMR**		Copper	0.8	04
2.0 16V (KG00, KG0K, KG0W)	99	F4R 715	08/02 →	**CT6KMR**	→ 09/07	Copper	0.8	04
	99	F4R 712	08/02 →	**CT6KMR**	→ 09/07	Copper	0.8	04
	99	F4R 713	08/02 →	**CT6KMR**	→ 09/07	Copper	0.8	04
	99	F4R 714	08/02 →	**CT6KMR**	→ 09/07	Copper	0.8	04
2.0 16V IDE (BG0N)	103	F5R 700	04/01 →	**CT5KHMR11**	→ 09/07	Copper	1.1	04
	103	F5R 701	04/01 →	**CT5KHMR11**	→ 09/07	Copper	1.1	04
LAGUNA III								
1.6 16V (KT0D)	81	K4M 824	10/07 →	**CT6KMR**		Copper	0.8	04
1.6 16V (BT04, BT0D, BT0U)	81	K4M 824	10/07 →	**CT6KMR**		Copper	0.8	04
	81	K4M 824	10/07 →	**7LPR**		Nickel	0.8	04
MEGANE CC								
1.6 16V (EZ0U, EZ1U)	81	K4M 858	06/10 →	**CT6KMR**		Copper	0.8	04
	81	K4M 858	06/10 →	**7LPR**		Nickel	0.8	04
MEGANE I								
1.4 16V (DA0D, DA1H, DA0W, DA10)	70	K4J 750	03/99 → 08/03	**CT6KMR**		Copper	0.8	04
	70	K4J 714	03/99 → 08/03	**CT6KMR**		Copper	0.8	04
1.4 16V (EA0D, EA1H, EA0W, EA10)	70	K4J 750	03/99 → 08/03	**CT6KMR**		Copper	0.8	04
	70	K4J 714	03/99 → 08/03	**CT6KMR**		Copper	0.8	04
1.4 16V (KA0D, KA1H, KA0W, KA10)	70	K4J 750	03/99 → 08/03	**CT6KMR**		Copper	0.8	04
	70	K4J 714	03/99 → 08/03	**CT6KMR**		Copper	0.8	04
1.4 16V (LA0D, LA1H, IA0W, LA10)	70	K4J 714	03/99 → 08/03	**CT6KMR**		Copper	0.8	04
	70	K4J 750	03/99 → 08/03	**CT6KMR**		Copper	0.8	04
1.4 e (KA0V)	55	E7J 626	03/99 → 08/03	**CT6KMR**	→ 10/00	Copper	0.8	04

	kW					CORE		QTY
RENAULT								
MEGANE I								
1.6 16V (DA0B, DA04, DA11)	79	K4M 700	03/99 → 08/03	**CT6KMR**		Copper	0.8	04
	79	K4M 708	03/99 → 08/03	**CT6KMR**		Copper	0.8	04
	79	K4M 701	03/99 → 08/03	**CT6KMR**		Copper	0.8	04
1.6 16V (EA0B, EA04, EA11)	79	K4M 700	03/99 → 08/03	**CT6KMR**		Copper	0.8	04
	79	K4M 708	03/99 → 08/03	**CT6KMR**		Copper	0.8	04
	79	K4M 701	03/99 → 08/03	**CT6KMR**		Copper	0.8	04
1.6 16V (KA0B, KA04, KA11)	79	K4M 700	03/99 → 08/03	**CT6KMR**		Copper	0.8	04
	79	K4M 708	03/99 → 08/03	**CT6KMR**		Copper	0.8	04
	79	K4M 704	03/99 → 08/03	**CT6KMR**		Copper	0.8	04
	79	K4M 701	03/99 → 08/03	**CT6KMR**		Copper	0.8	04
1.6 16V (La04, LA11, LA0B, LA1C, LA1J)1.6 16V (La04, LA11, LA0B, LA1C, LA1J)	79	K4M 700	03/99 → 08/03	**CT6KMR**		Copper	0.8	04
	79	K4M 708	03/99 → 08/03	**CT6KMR**		Copper	0.8	04
	79	K4M 701	03/99 → 08/03	**CT6KMR**		Copper	0.8	04
1.6 e (EA0F)	66	K7M 702	10/96 → 03/99	**D6KMR**		Copper	0.9	04
	66	K7M 703	10/96 → 03/99	**D6KMR**		Copper	0.9	04
1.6 e (KA0F)	66	K7M 703	03/99 → 08/03	**CT6KMR**		Copper	0.8	04
	66	K7M 702	03/99 → 08/03	**CT6KMR**		Copper	0.8	04
1.6 e (LA0F, LA0S)	66	K7M 790	09/96 → 03/99	**D6KMR**		Copper	0.9	04
	66	K7M 703	09/96 → 03/99	**D6KMR**		Copper	0.9	04
	66	K7M 702	09/96 → 03/99	**D6KMR**		Copper	0.9	04
1.8 16V (BA06, BA12, BA1A, BA1M, BA1R)	85	F4P 722	01/01 → 08/03	**CT6KMR**		Copper	0.8	04
	85	F4P 720	01/01 → 08/03	**CT6KMR**		Copper	0.8	04
	85	F4P 720	01/01 → 08/03	**7LPR**		Nickel	0.8	04
	85	F4P 722	01/01 → 08/03	**7LPR**		Nickel	0.8	04
1.8 16V (KA0S, KA12, KA1A, KA1M, KA1R)	85	F4P 722	01/01 → 08/03	**CT6KMR**		Copper	0.8	04
	85	F4P 720	01/01 → 08/03	**CT6KMR**		Copper	0.8	04
1.8 16V (LA06, LA12, LA1A, LA1M, LA1R)	85	F4P 722	01/01 → 08/03	**CT6KMR**		Copper	0.8	04
	85	F4P 720	01/01 → 08/03	**CT6KMR**		Copper	0.8	04
2.0	85	F3R 752	05/98 → 05/01	**CT5FMR**		Copper	0.8	04
	85	F3R 751	05/98 → 05/01	**CT5FMR**		Copper	0.8	04
	85	F3R 750	05/98 → 05/01	**CT5FMR**		Copper	0.8	04
	85	F3R 798	05/98 → 05/01	**CT5FMR**		Copper	0.8	04
	85	F3R 796	05/98 → 05/01	**CT5FMR**		Copper	0.8	04
	85	F3R 791	05/98 → 05/01	**CT5FMR**		Copper	0.8	04
	85	F3R 797	05/98 → 05/01	**CT5FMR**		Copper	0.8	04
2.0 (EA0G)	84	F3R 798	04/97 → 08/03	**CT6FMR**		Copper	0.8	04
	84	F3R 750	04/97 → 08/03	**CT6FMR**		Copper	0.8	04
2.0 16V	102	F4R 746	01/02 → 08/03	**CT6KMR**		Copper	0.8	04
	102	F4R 770	01/02 → 08/03	**CT6KMR**		Copper	0.8	04

	kW					CORE		QTY
RENAULT								
MEGANE I								
2.0 16V IDE (DA03, DA0P, DA14)	103	F5R 740	11/99 → 08/03	**CT5KHMR11**		Copper	1.1	04
2.0 16V IDE (EA03, EA0P, EA14)	103	F5R 740	11/99 → 08/03	**CT5KHMR11**		Copper	1.1	04
2.0 i	80	F3R 791	03/99 → 08/03	**CT5KHMR11**	→ 10/00	Copper	1.1	04
	80	F3R 796	03/99 → 08/03	**CT5KHMR11**	→ 10/00	Copper	1.1	04
	80	F3R 751	03/99 → 08/03	**CT6FM**		Copper	0.8	04
	80	F3R 750	03/99 → 08/03	**CT6FM**		Copper	0.8	04
	80	F3R 751	03/99 → 08/03	**CW7LP**		Nickel	0.8	04
	80	F3R 750	03/99 → 08/03	**CW7LP**		Nickel	0.8	04
2.0 i (BA0G)	84	F3R 750	01/96 → 08/03	**CT6FM**		Copper	0.8	04
	84	F3R 751	01/96 → 08/03	**CT6FM**		Copper	0.8	04
	84	F3R 750	01/96 → 08/03	**CW7LP**		Nickel	0.8	04
	84	F3R 751	01/96 → 08/03	**CW7LP**		Nickel	0.8	04
2.0 i (DA0G)	84	F3R 798	03/96 → 08/03	**CT6FM**		Copper	0.8	04
	84	F3R 750	03/96 → 08/03	**CT6FM**		Copper	0.8	04
	84	F3R 751	03/96 → 08/03	**CT6FM**		Copper	0.8	04
2.0 i (EA0G)	80	F3R 791	03/99 → 08/03	**CT6FMR**	→ 02/03	Copper	0.8	04
	80	F3R 796	03/99 → 08/03	**CT6FMR**	→ 02/03	Copper	0.8	04
2.0 i (LA07, LA0G)	84	F3R 798	09/96 → 08/03	**CT6FM**		Copper	0.8	04
	84	F3R 797	09/96 → 08/03	**CT6FM**		Copper	0.8	04
	84	F3R 791	09/96 → 08/03	**CT6FM**		Copper	0.8	04
	84	F3R 752	09/96 → 08/03	**CT6FM**		Copper	0.8	04
	84	F3R 796	09/96 → 08/03	**CT6FM**		Copper	0.8	04
	84	F3R 750	09/96 → 08/03	**CT6FM**		Copper	0.8	04
	84	F3R 751	09/96 → 08/03	**CT6FM**		Copper	0.8	04
2.0 i (LA0G)	80	F3R 798	03/99 → 08/03	**CT6KMR**		Copper	0.8	04
	80	F3R 791	03/99 → 08/03	**CT6KMR**		Copper	0.8	04
	80	F3R 752	03/99 → 08/03	**CT6KMR**		Copper	0.8	04
	80	F3R 797	03/99 → 08/03	**CT6KMR**		Copper	0.8	04
	80	F3R 796	03/99 → 08/03	**CT6KMR**		Copper	0.8	04
2.0 RXE	85	F3R 752	05/98 → 05/01	**CT5FMR**		Copper	0.8	04
	85	F3R 751	05/98 → 05/01	**CT5FMR**		Copper	0.8	04
	85	F3R 750	05/98 → 05/01	**CT5FMR**		Copper	0.8	04
	85	F3R 798	05/98 → 05/01	**CT5FMR**		Copper	0.8	04
	85	F3R 796	05/98 → 05/01	**CT5FMR**		Copper	0.8	04
	85	F3R 791	05/98 → 05/01	**CT5FMR**		Copper	0.8	04
	85	F3R 797	05/98 → 05/01	**CT5FMR**		Copper	0.8	04
MEGANE II								
1.4	60	K4J 732	09/03 →	**CT6KMR**	→ 12/05	Copper	0.8	04
	72	K4J 730	08/03 → 07/09	**CT6KMR**	→ 10/08	Copper	0.8	04
	72	K4J 740	08/03 → 07/09	**CT6KMR**	→ 10/08	Copper	0.8	04
1.4 16V	60	K4J 732	10/03 → 02/08	**7LPR**	→ 12/05	Nickel	0.8	04
	60	K4J 732	10/03 → 02/08	**CT6KMR**	→ 12/05	Copper	0.8	04

	kW					CORE		QTY
RENAULT								
MEGANE II								
1.4 16V (BM0B, CM0B)	72	K4J 730	11/02 → 02/08	**CT6KMR**		Copper	0.8	04
	72	K4J 740	11/02 → 02/08	**7LPR**		Nickel	0.8	04
	72	K4J 730	11/02 → 02/08	**7LPR**		Nickel	0.8	04
	72	K4J 740	11/02 → 02/08	**CT6KMR**		Copper	0.8	04
1.6	77	K4M 762	05/05 →	**CT6KMR**		Copper	0.8	04
	83	K4M 760	09/03 → 03/09	**CT6KMR**	→ 09/06	Copper	0.8	04
	83	K4M 761	09/03 → 03/09	**CT6KMR**	→ 09/06	Copper	0.8	04
	77	K4M 788	06/05 → 02/08	**7LPR**		Nickel	0.8	04
	77	K4M 788	06/05 → 02/08	**CT6KMR**		Copper	0.8	04
1.6 16V	82	K4M 761	01/06 → 06/08	**CT6KMR**		Copper	0.8	04
	82	K4M 760	01/06 → 06/08	**7LPR**		Nickel	0.8	04
	82	K4M 813	01/06 → 06/08	**7LPR**		Nickel	0.8	04
	82	K4M 812	01/06 → 06/08	**7LPR**		Nickel	0.8	04
	82	K4M 812	01/06 → 06/08	**CT6KMR**		Copper	0.8	04
	82	K4M 760	01/06 → 06/08	**CT6KMR**		Copper	0.8	04
	82	K4M 813	01/06 → 06/08	**CT6KMR**		Copper	0.8	04
1.6 16V Hi-Flex	77	K4M 856	02/08 → 07/09	**CT6KMR**		Copper	0.8	04
1.6 16V (BM0C, CM0C)	83	K4M 760	11/02 → 02/08	**7LPR**		Nickel	0.8	04
	83	K4M 760	11/02 → 02/08	**CT6KMR**		Copper	0.8	04
2.0	99	F4R 770	09/03 → 12/09	**CT6KMR**	→ 07/09	Copper	0.8	04
	99	F4R 771	09/03 → 12/09	**CT6KMR**	→ 07/09	Copper	0.8	04
2.0 16V (BM0U, CM0U)	99	F4R 770	11/02 → 02/08	**CT6KMR**		Copper	0.8	04
	99	F4R 770	11/02 → 02/08	**7LPR**		Nickel	0.8	04
2.0 Dynamique	99	F4R 770	09/03 → 12/09	**CT6KMR**	→ 07/09	Copper	0.8	04
	99	F4R 771	09/03 → 12/09	**CT6KMR**	→ 07/09	Copper	0.8	04
MEGANE III								
1.6 16V (BZ0H)	74	K4M 848	11/08 →	**7LPR**		Nickel	0.8	04
	74	K4M 848	11/08 →	**CT6KMR**		Copper	0.8	04
1.6 16V (BZ1B, BZ1H)	81	K4M 858	11/08 →	**7LPR**		Nickel	0.8	04
	81	K4M 858	11/08 →	**CT6KMR**		Copper	0.8	04
1.6 16V (DZ0H)	74	K4M 848	11/08 →	**7LPR**		Nickel	0.8	04
	74	K4M 848	11/08 →	**CT6KMR**		Copper	0.8	04
1.6 16V (DZ0U, DZ1B, DZ1H)	81	K4M 858	11/08 →	**7LPR**		Nickel	0.8	04
	81	K4M 858	11/08 →	**CT6KMR**		Copper	0.8	04
1.6 16V (KZ0H)	74	K4M 848	05/09 →	**7LPR**		Nickel	0.8	04
	74	K4M 848	05/09 →	**CT6KMR**		Copper	0.8	04
1.6 16V (KZ0U, KZ1B, KZ1U)	81	K4M 858	05/09 →	**7LPR**		Nickel	0.8	04
	81	K4M 858	05/09 →	**CT6KMR**		Copper	0.8	04
MEGANE Scenic								
1.6 16V (JA0B, JA04, JA11)	79	K4M 700	04/98 → 10/99	**D6KMR**		Copper	0.9	04
	79	K4M 701	04/98 → 10/99	**D6KMR**		Copper	0.9	04
	79	K4M 704	04/98 → 10/99	**D6KMR**		Copper	0.9	04
	79	K4M 708	04/98 → 10/99	**D6KMR**		Copper	0.9	04

	kW					CORE		QTY
RENAULT								
MEGANE Scenic								
2.0 i (JA0G)	80	F3R 796	01/99 → 09/99	**CT6FM**		Copper	0.8	04
	84	F3R 750	01/97 → 09/99	**CT6FM**		Copper	0.8	04
	84	F3R 751	01/97 → 09/99	**CT6FM**		Copper	0.8	04
	80	F3R 796	01/99 → 09/99	**CW7LP**		Nickel	0.8	04
	84	F3R 750	01/97 → 09/99	**CW7LP**		Nickel	0.8	04
	84	F3R 751	01/97 → 09/99	**CW7LP**		Nickel	0.8	04
MODUS / GRAND MODUS								
1.2 (FP0C, FP0K, FP0P)	48	D4F 740	05/05 →	**CT5LDMR9**	→ 12/07	Copper	0.9	04
1.2 (JP0C, JP0K, FP0C, FP0K, FP0P, JP0P, JP0T)	55	D4F 740	12/04 →	**CT5LDMR9**		Copper	0.9	04
1.2 (JP0S)	58	D4F 764	12/04 →	**CT5LDMR9**		Copper	0.9	04
1.2 16V Hi-Flex	55	D4F 740	10/08 →	**CT5LDMR9**		Copper	0.9	04
1.4 (JP01, JP0J)	72	K4J 780	12/04 →	**7LPR**		Nickel	0.8	04
	72	K4J 770	12/04 →	**7LPR**		Nickel	0.8	04
	72	K4J 780	12/04 →	**CT6KMR**		Copper	0.8	04
	72	K4J 770	12/04 →	**CT6KMR**		Copper	0.8	04
1.6 (JP03, JP0B, JP0U, JP0Y, JP1G)	82	K4M 791	12/04 →	**7LPR**		Nickel	0.8	04
	82	K4M 801	12/04 →	**7LPR**		Nickel	0.8	04
	82	K4M 800	12/04 →	**7LPR**		Nickel	0.8	04
	82	K4M 790	12/04 →	**7LPR**		Nickel	0.8	04
	82	K4M 791	12/04 →	**CT6KMR**		Copper	0.8	04
	82	K4M 801	12/04 →	**CT6KMR**		Copper	0.8	04
	82	K4M 800	12/04 →	**CT6KMR**		Copper	0.8	04
	82	K4M 790	12/04 →	**CT6KMR**		Copper	0.8	04
1.6 (JP0L, JP0V)	65	K4M 794	12/04 →	**7LPR**	→ 12/07	Nickel	0.8	04
	65	K4M 794	12/04 →	**CT6KMR**	→ 12/07	Copper	0.8	04
RAPID								
1.4	59	E7J 773	05/95 → 08/97	**7LPR**		Nickel	0.8	04
RAPID Furgonato								
1.1 (F40H)	33	C1E 756	06/87 → 09/91	**CT5FMR**		Copper	0.8	04
1.4	59	E7J 773	05/95 → 08/97	**CT6KMR**		Copper	0.8	04
SAFRANE I								
3.0 V6 (B54B, B544)	123	Z7X 753	12/92 → 07/96	**YJT6KMR**		Copper	1.0	06
	123	Z7X 722	12/92 → 07/96	**YJT6KMR**		Copper	1.0	06
	123	Z7X 721	12/92 → 07/96	**YJT6KMR**		Copper	1.0	06
	123	Z7X 723	12/92 → 07/96	**YJT6KMR**		Copper	1.0	06
SAFRANE II								
2.0 16V (B54L)	100	N7Q 711	07/96 → 12/00	**YJT6KMR**		Copper	1.0	04
	100	N7Q 710	07/96 → 12/00	**YJT6KMR**		Copper	1.0	04
2.5 20V (B54F)	121	N7U 701	07/96 → 12/00	**CT6KMR**		Copper	0.8	05
	121	N7U 700	07/96 → 12/00	**CT6KMR**		Copper	0.8	05

MAGNETI MARELLI

	kW					CORE		QTY
RENAULT								
SCÉNIC I								
1.4 16V (JA0D, JA1H, Ja0W, JA10)	70	K4J 714	09/99 → 08/03	**D6KMR**		Copper	0.9	04
	70	K4J 750	09/99 → 08/03	**D6KMR**		Copper	0.9	04
1.6	75	K4M 708	03/01 → 08/03	**7LPR**		Nickel	0.8	04
	75	K4M 708	03/01 → 08/03	**CT6KMR**		Copper	0.8	04
	75	K4M 709	03/01 → 08/03	**7LPR**		Nickel	0.8	04
	75	K4M 709	03/01 → 08/03	**CT6KMR**		Copper	0.8	04
	79	K4M 700	09/99 → 09/03	**7LPR**		Nickel	0.8	04
	79	K4M 700	09/99 → 09/03	**CT6KMR**		Copper	0.8	04
	79	K4M 706	09/99 → 09/03	**7LPR**		Nickel	0.8	04
	79	K4M 706	09/99 → 09/03	**CT6KMR**		Copper	0.8	04
1.6 RT 16V	79	K4M 700	09/99 → 09/03	**7LPR**		Nickel	0.8	04
	79	K4M 700	09/99 → 09/03	**CT6KMR**		Copper	0.8	04
	79	K4M 706	09/99 → 09/03	**7LPR**		Nickel	0.8	04
	79	K4M 706	09/99 → 09/03	**CT6KMR**		Copper	0.8	04
1.8 16V (JA12, JA1R, JA1M, JA1A)	85	F4P 720	01/01 → 08/03	**7LPR**		Nickel	0.8	04
	85	F4P 720	01/01 → 08/03	**CT6KMR**		Copper	0.8	04
	85	F4P 722	01/01 → 08/03	**7LPR**		Nickel	0.8	04
	85	F4P 722	01/01 → 08/03	**CT6KMR**		Copper	0.8	04
1.8 4x4	85	F4P 722	07/00 → 04/01	**7LPR**		Nickel	0.8	04
	85	F4P 722	07/00 → 04/01	**CT6KMR**		Copper	0.8	04
2.0 16V	103	F4R 740	09/99 → 08/03	**7LPR**		Nickel	0.8	04
	103	F4R 740	09/99 → 08/03	**CT6KMR**		Copper	0.8	04
	103	F4R 741	09/99 → 08/03	**7LPR**		Nickel	0.8	04
	103	F4R 741	09/99 → 08/03	**CT6KMR**		Copper	0.8	04
	103	F4R 744	09/99 → 08/03	**7LPR**		Nickel	0.8	04
	103	F4R 744	09/99 → 08/03	**CT6KMR**		Copper	0.8	04
	103	F4R 747	09/99 → 08/03	**7LPR**		Nickel	0.8	04
	103	F4R 747	09/99 → 08/03	**CT6KMR**		Copper	0.8	04
2.0 16V (JA1B, JA1D)	102	F4R 740	07/00 → 08/03	**7LPR**		Nickel	0.8	04
	102	F4R 740	07/00 → 08/03	**CT6KMR**		Copper	0.8	04
	102	F4R 741	07/00 → 08/03	**7LPR**		Nickel	0.8	04
	102	F4R 741	07/00 → 08/03	**CT6KMR**		Copper	0.8	04
	102	F4R 746	07/00 → 08/03	**7LPR**		Nickel	0.8	04
	102	F4R 746	07/00 → 08/03	**CT6KMR**		Copper	0.8	04
2.0 16V RX4	102	F4R 744	06/00 → 08/03	**7LPR**		Nickel	0.8	04
	102	F4R 744	06/00 → 08/03	**CT6KMR**		Copper	0.8	04
	102	F4R 746	06/00 → 08/03	**7LPR**		Nickel	0.8	04
	102	F4R 746	06/00 → 08/03	**CT6KMR**		Copper	0.8	04

	kW					CORE		QTY
RENAULT								
SCÉNIC II								
1.4 (JM0B, JM0H, JM1A)	72	K4J 770	06/03 →	**7LPR**	→ 09/06	Nickel	0.8	04
	72	K4J 740	06/03 →	**7LPR**	→ 09/06	Nickel	0.8	04
	72	K4J 730	06/03 →	**7LPR**	→ 09/06	Nickel	0.8	04
	72	K4J 770	06/03 →	**CT6KMR**	→ 09/06	Copper	0.8	04
	72	K4J 740	06/03 →	**CT6KMR**	→ 09/06	Copper	0.8	04
	72	K4J 730	06/03 →	**CT6KMR**	→ 09/06	Copper	0.8	04
1.6	77	K4M 788	06/06 →	**7LPR**	→ 07/06	Nickel	0.8	04
	77	K4M 788	06/06 →	**CT6KMR**	→ 07/06	Copper	0.8	04
1.6 (JM0C, JM0J, JM1B)	83	K4M 782	06/03 →	**7LPR**	→ 12/05	Nickel	0.8	04
	83	K4M 761	06/03 →	**7LPR**	→ 12/05	Nickel	0.8	04
	83	K4M 782	06/03 →	**CT6KMR**	→ 12/05	Copper	0.8	04
	83	K4M 761	06/03 →	**CT6KMR**	→ 12/05	Copper	0.8	04
1.6 16V (JM1R)	82	K4M 812	10/05 →	**7LPR**	→ 07/08	Nickel	0.8	04
	82	K4M 766	10/05 →	**7LPR**	→ 07/08	Nickel	0.8	04
	82	K4M 706	10/05 →	**7LPR**	→ 07/08	Nickel	0.8	04
	82	K4M 813	10/05 →	**7LPR**	→ 07/08	Nickel	0.8	04
	82	K4M 812	10/05 →	**CT6KMR**	→ 07/08	Copper	0.8	04
	82	K4M 766	10/05 →	**CT6KMR**	→ 07/08	Copper	0.8	04
	82	K4M 706	10/05 →	**CT6KMR**	→ 07/08	Copper	0.8	04
	82	K4M 813	10/05 →	**CT6KMR**	→ 07/08	Copper	0.8	04
2.0 (JM05, JM0U, JM1N, JM1U, JM2V)	99	F4R 770	06/03 →	**7LPR**	→ 09/06	Nickel	0.8	04
	99	F4R 771	06/03 →	**7LPR**	→ 09/06	Nickel	0.8	04
	99	F4R 770	06/03 →	**CT6KMR**	→ 09/06	Copper	0.8	04
	99	F4R 771	06/03 →	**CT6KMR**	→ 09/06	Copper	0.8	04
2.0 16V Turbo (JM0W)	120	F4R 776	05/04 →	**7LPR**	→ 07/08	Nickel	0.8	04
	120	F4R 776	05/04 →	**CT6KMR**	→ 07/08	Copper	0.8	04
SCÉNIC III								
1.6 16V (JZ0U)	81	K4M 858	02/09 →	**7LPR**		Nickel	0.8	04
	81	K4M R 858	02/09 →	**7LPR**		Nickel	0.8	04
1.6 E85 (JZ03)	81	K4M 866	02/09 →	**7LPR**		Nickel	0.8	04
1.6 16V (JZ0U)	81	K4M 858	02/09 →	**CT6KMR**		Copper	0.8	04
	81	K4M R 858	02/09 →	**CT6KMR**		Copper	0.8	04
1.6 E85 (JZ03)	81	K4M 866	02/09 →	**CT6KMR**		Copper	0.8	04
SUPER 5								
1.2 (B/C40F)	40	C1G 720	01/87 → 08/90	**CW7LPR**	03/90 →	Nickel	0.8	04
	40	C1G 702	01/87 → 08/90	**CW7LPR**	03/90 →	Nickel	0.8	04
	40	C1G 722	01/87 → 08/90	**CW7LPR**	03/90 →	Nickel	0.8	04
	40	C1G 720	01/87 → 08/90	**CT6FMR**	10/87 →	Copper	0.8	04
	40	C1G 702	01/87 → 08/90	**CT6FMR**	03/90 →	Copper	0.8	04
	40	C1G 722	01/87 → 08/90	**CT6FMR**	03/90 →	Copper	0.8	04
1.4 (B/C40J)	49	C2J 782	06/87 → 07/89	**CW7LPR**		Nickel	0.8	04
	49	C2J 782	06/87 → 07/89	**CT6FMR**		Copper	0.8	04
1.4 (B/C40M)	44	C2J 784	06/87 → 08/90	**CW7LPR**		Nickel	0.8	04
	44	C2J 784	06/87 → 08/90	**CT6FMR**		Copper	0.8	04

	kW					CORE		QTY
RENAULT								
SYMBOL I								
1.2	43	D7F 744	02/98 → 10/03	**CT5LDMR9**		Copper	0.9	04
	43	D7F 746	02/98 → 10/03	**CT5LDMR9**		Copper	0.9	04
1.2 16V	55	D4F 712	04/02 →	**CT5LDMR9**		Copper	0.9	04
	55	D4F 706	04/02 →	**CT5LDMR9**		Copper	0.9	04
1.4	55	K7J 700	08/00 →	**D6KMR**		Copper	0.9	04
1.4 16V	72	K4J 712	08/00 →	**D6KMR**		Copper	0.9	04
1.6	66	K7M 746	03/98 →	**D6KMR**		Copper	0.9	04
1.6 16V	79	K4M 740	04/02 →	**7LPR**	→ 09/08	Nickel	0.8	04
	79	K4M 740	04/02 →	**CT6KMR**	→ 09/08	Copper	0.8	04
SYMBOL II								
1.2 16V (LU2V)	55	D4F 728	09/08 →	**CT5LDMR9**		Copper	0.9	04
1.6 16V	77	K4M 743	09/08 →	**CT6KMR**		Copper	0.8	04
	77	K4M 743	09/08 →	**7LPR**		Nickel	0.8	04
THALIA I								
1.2	43	D7F 744	02/98 → 10/03	**CT5LDMR9**		Copper	0.9	04
	43	D7F 746	02/98 → 10/03	**CT5LDMR9**		Copper	0.9	04
1.2 16V	55	D4F 712	04/02 →	**CT5LDMR9**		Copper	0.9	04
	55	D4F 706	04/02 →	**CT5LDMR9**		Copper	0.9	04
1.4	55	K7J 700	08/00 →	**D6KMR**		Copper	0.9	04
1.4 16V	72	K4J 712	08/00 →	**D6KMR**		Copper	0.9	04
1.6	66	K7M 746	03/98 →	**D6KMR**		Copper	0.9	04
1.6 16V	79	K4M 740	04/02 →	**7LPR**	→ 09/08	Nickel	0.8	04
	79	K4M 740	04/02 →	**CT6KMR**	→ 09/08	Copper	0.8	04
THALIA II								
1.2 16V (LU2V)	55	D4F 728	09/08 →	**CT5LDMR9**		Copper	0.9	04
1.6 16V	77	K4M 743	09/08 →	**7LPR**		Nickel	0.8	04
	77	K4M 743	09/08 →	**CT6KMR**		Copper	0.8	04
TRAFIC								
2.0	59	J5R 726	05/89 → 08/90	**CW7LPR**		Nickel	0.8	04
2.0 [RWD]	59	J5R 726	05/89 → 10/97	**CT6FMR**		Copper	0.8	04
TWINGO I								
1.2 16V (C060)	44	D4F 708	08/04 → 06/07	**CT5LDMR9**		Copper	0.9	04
1.2 16V (C06C, C06D, C06K)	55	D4F 702	01/01 →	**CT5LDMR9**		Copper	0.9	04
TWINGO II								
1.2 (CN0D)	43	D7F 800	03/07 →	**D6KMR**		Copper	0.9	04
1.2 16V (CN04, CN0A, CN0B)	55	D4F 764	03/07 →	**CT5LDMR9**		Copper	0.9	04
	55	D4F 772	03/07 →	**CT5LDMR9**		Copper	0.9	04
	55	D4F 770	03/07 →	**CT5LDMR9**		Copper	0.9	04
1.2 16V (CN0K, CN0V)	56	D4F 772	03/07 →	**CT5LDMR9**		Copper	0.9	04

	kW					CORE		QTY
ROVER								
100 / METRO								
114 GTI 16V	69	14 K4C	03/90 → 08/91	**CT6KMR**		Copper	0.8	04
	69	14 K4D	03/90 → 08/91	**7LPR**		Nickel	0.8	04
	69	14 K4C	03/90 → 08/91	**7LPR**		Nickel	0.8	04
	69	14 K4D	03/90 → 08/91	**CT6KMR**		Copper	0.8	04
	76	14 K4F	08/91 → 12/98	**7LPR**	→ 01/95	Nickel	0.8	04
	76	14 K4F	08/91 → 12/98	**CT6KMR**	→ 01/95	Copper	0.8	04
114 GTI/GT 16V Cat	66	14 K4C	03/90 → 12/98	**CT6KMR**	→ 12/92	Copper	0.8	04
	66	14 K4D	03/90 → 12/98	**7LPR**	→ 12/92	Nickel	0.8	04
	66	14 K4C	03/90 → 12/98	**7LPR**	→ 12/92	Nickel	0.8	04
	66	14 K4D	03/90 → 12/98	**CT6KMR**	→ 12/92	Copper	0.8	04
114 S/L/GTA	55	14 K2A	03/90 → 12/98	**CT6KMR**		Copper	0.8	04
	55	14 K2D	03/90 → 12/98	**CT6KMR**		Copper	0.8	04
	55	14 K2D	03/90 → 12/98	**7LPR**		Nickel	0.8	04
	55	14 K2A	03/90 → 12/98	**7LPR**		Nickel	0.8	04
200								
214	55	14 K2D	09/93 → 10/95	**7LPR**		Nickel	0.8	04
	55	14 K2A	09/93 → 10/95	**7LPR**		Nickel	0.8	04
	55	14 K2D	09/93 → 10/95	**CT6KMR**		Copper	0.8	04
	55	14 K2A	09/93 → 10/95	**CT6KMR**		Copper	0.8	04
216	90	D 16 A8	10/92 → 06/99	**CT6KMR**	→ 03/96	Copper	0.8	04
214 1.4	70	14 K4C	04/90 → 09/92	**CT6KMR**	04/92 →	Copper	0.8	04
214 1.4i 16V	76	14 K4F	01/93 → 11/99	**CT6KMR**	→ 03/96	Copper	0.8	04
214 GSi/Si	70	14 K4C	01/90 → 10/95	**7LPR**	→ 09/92	Nickel	0.8	04
	70	14 K4C	01/90 → 10/95	**CT6KMR**	→ 09/92	Copper	0.8	04
	76	14 K4F	12/92 → 10/95	**7LPR**		Nickel	0.8	04
	76	14 K4F	12/92 → 10/95	**CT6KMR**		Copper	0.8	04
214 i	55	14 K2F	11/95 → 03/00	**7LPR**	→ 03/96	Nickel	0.8	04
	55	14 K2F	11/95 → 03/00	**CT6KMR**	→ 03/96	Copper	0.8	04
214 Si	76	14 K4F	11/95 → 03/00	**7LPR**	→ 03/96	Nickel	0.8	04
	76	14 K4F	11/95 → 03/00	**CT6KMR**	→ 03/96	Copper	0.8	04
214 Si/Gsi	66	14 K4C	10/89 → 10/95	**7LPR**	→ 09/92	Nickel	0.8	04
	66	14 K4D	10/89 → 10/95	**7LPR**	→ 09/92	Nickel	0.8	04
	66	14 K4C	10/89 → 10/95	**CT6KMR**	→ 09/92	Copper	0.8	04
	66	14 K4D	10/89 → 10/95	**CT6KMR**	→ 09/92	Copper	0.8	04
216 1.6i	90	D 16 A8	01/92 → 11/99	**CT6KMR**	→ 03/96	Copper	0.8	04
216 1.6i 16V	82	16 K4F	01/96 → 11/99	**CT6KMR**		Copper	0.8	04
216 GSi	82	D 16 Z2	10/89 → 10/95	**7LPR**		Nickel	0.8	04
	82	D 16 Z2	10/89 → 10/95	**CT6KMR**		Copper	0.8	04
	85	D 16 A7	10/89 → 10/95	**7LPR**		Nickel	0.8	04
	85	D 16 A7	10/89 → 10/95	**CT6KMR**		Copper	0.8	04
216 GTi	90	D 16 A8	09/90 → 10/95	**7LPR**		Nickel	0.8	04
	90	D 16 A8	09/90 → 10/95	**CT6KMR**		Copper	0.8	04
	96	D 16 A9	09/90 → 10/95	**7LPR**	→ 11/93	Nickel	0.8	04
	96	D 16 A9	09/90 → 10/95	**CT6KMR**	→ 11/93	Copper	0.8	04

	kW					CORE		QTY
ROVER								
200								
220 GSi	100	20 T4H	05/94 → 06/99	**CT6KMR**	→ 03/96	Copper	0.8	04
220 GTi	100	20 T4H	01/93 → 10/95	**7LPR**		Nickel	0.8	04
	100	20 T4H	01/93 → 10/95	**CT6KMR**		Copper	0.8	04
	103	20 M4F	09/91 → 10/95	**7LPR**	→ 09/92	Nickel	0.8	04
	103	20 M4F	09/91 → 10/95	**CT6KMR**	→ 09/92	Copper	0.8	04
220 Turbo	147	20 T4G	01/93 → 10/95	**7LPR**		Nickel	0.8	04
	147	20 T4G	01/93 → 10/95	**CT6KMR**		Copper	0.8	04
	147	20 T4G	10/92 → 06/99	**CT6KMR**	→ 03/96	Copper	0.8	04
400								
1.6 i	82	D 16 Z2	05/94 → 11/98	**CT6KMR**	→ 04/95	Copper	0.8	04
2.0 i	100	20 T4H	05/94 → 11/98	**CT6KMR**	→ 04/95	Copper	0.8	04
414	70	14 K4C	01/93 → 04/95	**7LPR**		Nickel	0.8	04
	70	14 K4C	01/93 → 04/95	**CT6KMR**		Copper	0.8	04
414 GSI/SI	66	14 K4C	04/90 → 04/95	**7LPR**	→ 09/92	Nickel	0.8	04
	66	14 K4D	04/90 → 04/95	**7LPR**	→ 09/92	Nickel	0.8	04
	66	14 K4C	04/90 → 04/95	**CT6KMR**	→ 09/92	Copper	0.8	04
	66	14 K4D	04/90 → 04/95	**CT6KMR**	→ 09/92	Copper	0.8	04
414 GSI/SI Cat	76	14 K4F	01/93 → 04/95	**7LPR**		Nickel	0.8	04
	76	14 K4F	01/93 → 04/95	**CT6KMR**		Copper	0.8	04
416 GSI	82	D 16 Z2	04/90 → 04/95	**7LPR**		Nickel	0.8	04
	82	D 16 Z2	04/90 → 04/95	**CT6KMR**		Copper	0.8	04
416 GSI/GSE	85	D 16 A7	04/90 → 04/95	**7LPR**		Nickel	0.8	04
	85	D 16 A7	04/90 → 04/95	**CT6KMR**		Copper	0.8	04
416 GTI	90	D 16 A8	04/90 → 04/95	**7LPR**	→ 09/92	Nickel	0.8	04
	90	D 16 A8	04/90 → 04/95	**CT6KMR**	→ 09/92	Copper	0.8	04
416 GTI/GTE	96	D 16 A9	04/90 → 04/95	**7LPR**	→ 09/92	Nickel	0.8	04
	96	D 16 A9	04/90 → 04/95	**CT6KMR**	→ 09/92	Copper	0.8	04
416 Si	83	D 16 Y2	05/95 → 03/00	**CT6KMR11**		Copper	1.1	04
420 GSI/SLI/GTI/ Vite	100	20 T4H	01/93 → 04/95	**7LPR**		Nickel	0.8	04
	100	20 T4H	01/93 → 04/95	**CT6KMR**		Copper	0.8	04
420 GTI/GSI/ Vitesse	103	20 M4F	02/92 → 04/95	**7LPR**	→ 09/92	Nickel	0.8	04
	103	20 M4F	02/92 → 04/95	**CT6KMR**	→ 09/92	Copper	0.8	04
420 Turbo	147	20 T4G	01/93 → 04/95	**7LPR**		Nickel	0.8	04
	147	20 T4G	01/93 → 04/95	**CT6KMR**		Copper	0.8	04
800								
2.5	129	25 K4F	02/96 → 10/98	**CT6KMR**		Copper	0.8	06
2.5 Si	129	25 K4F	02/96 → 10/98	**CT6KMR**		Copper	0.8	06
820 16V Turbo (RS)	132	T 16	01/92 → 02/99	**7LPR**		Nickel	0.8	04
	132	T 16	01/92 → 02/99	**CT6KMR**		Copper	0.8	04
820 I/SI (RS)	100	20 T4H	01/92 → 02/99	**7LPR**		Nickel	0.8	04
	100	20 T4H	01/92 → 02/99	**CT6KMR**		Copper	0.8	04
820 i/Si (XS)	103	20 HD	10/88 → 12/91	**CT6KMR**		Copper	0.8	04
820 Sport	145	20 T4G	04/94 → 03/96	**7LPR**		Nickel	0.8	04
	145	20 T4G	04/94 → 03/96	**CT6KMR**		Copper	0.8	04

	kW					CORE		QTY
ROVER								
800								
825 Si (RS)	129	25 K4F	04/96 → 02/99	**CT6KMR**		Copper	0.8	06
825 Si Lux (RS)	129	25 K4F	04/96 → 02/99	**7LPR**		Nickel	0.8	06
	129	25 K4F	04/96 → 02/99	**CT6KMR**		Copper	0.8	06
825 SI/Sterling (XS)	127	C 25 A2	01/87 → 12/91	**7LPR**	→ 02/88	Nickel	0.8	06
	127	C 25 A2	01/87 → 12/91	**CT6KMR**	→ 02/88	Copper	0.8	06
827 SI/Sterling (XS)	130	C 27 A2	02/88 → 12/91	**7LPR**		Nickel	0.8	06
	130	C 27 A2	02/88 → 12/91	**CT6KMR**		Copper	0.8	06
827 SI/Sterling Catalytic-Conv (XS)	124	C 27 A1	02/88 → 02/99	**7LPR**	→ 09/91	Nickel	0.8	06
	124	C 27 A1	02/88 → 02/99	**CT6KMR**	→ 09/91	Copper	0.8	06
827 Vitesse Catalytic-Conv (XS)	124	C 27 A1	10/88 → 12/91	**CT6KMR**		Copper	0.8	06
827 Vitesse/SLI	130	C 27 A2	10/88 → 12/91	**CT6KMR**		Copper	0.8	06
COUPE								
1.6 16 V	82	16 K4F	03/96 → 11/99	**7LPR**		Nickel	0.8	04
	82	16 K4F	03/96 → 11/99	**CT6KMR**		Copper	0.8	04
MAESTRO								
1.3	49	12 HE	09/90 → 01/95	**CW7LP**		Nickel	0.8	04
	49	12 HE	09/90 → 01/95	**CT6FM**		Copper	0.8	04
	51	12 HE	09/90 → 01/95	**CW7LP**		Nickel	0.8	04
	51	12 HE	09/90 → 01/95	**CT6FM**		Copper	0.8	04
1.6	63	16 H	09/90 → 01/95	**7LPR**	→ 04/92	Nickel	0.8	04
	63	16 H	09/90 → 01/95	**CT6KMR**	→ 04/92	Copper	0.8	04
MINI								
1000	30	99 HD 81	01/92 → 06/93	**CW7LPR**		Nickel	0.8	04
	30	99 HD 81	01/92 → 06/93	**CT6FMR**		Copper	0.8	04
1300	37	12 A2B	10/92 → 11/00	**CW7LPR**		Nickel	0.8	04
	37	12 A2L	04/92 → 10/96	**CW7LPR**		Nickel	0.8	04
	37	12 A2B	04/92 → 10/96	**CW7LPR**		Nickel	0.8	04
	37	12 A2B	10/92 → 11/00	**CT6FMR**		Copper	0.8	04
	37	12 A2L	04/92 → 10/96	**CT6FMR**		Copper	0.8	04
	37	12 A2B	04/92 → 10/96	**CT6FMR**		Copper	0.8	04
	39	12 A2D	01/92 → 04/95	**CW7LPR**		Nickel	0.8	04
	39	12 A2L	05/96 → 10/96	**CW7LPR**		Nickel	0.8	04
	39	12 A2D	01/92 → 04/95	**CT6FMR**		Copper	0.8	04
	39	12 A2L	05/96 → 10/96	**CT6FMR**		Copper	0.8	04
	45	12 A2A	01/91 → 12/91	**CW7LPR**		Nickel	0.8	04
	45	12 A2A	01/91 → 12/91	**CT6FMR**		Copper	0.8	04
	46	12 A2L	01/92 → 11/00	**CW7LPR**		Nickel	0.8	04
	46	12 A2E	01/92 → 11/00	**CW7LPR**		Nickel	0.8	04
	46	12 A2L	01/92 → 11/00	**CT6FMR**		Copper	0.8	04
	46	12 A2E	01/92 → 11/00	**CT6FMR**		Copper	0.8	04
1300 / Cooper	45	12 A2A	06/91 → 02/94	**CW7LPR**		Nickel	0.8	04
	45	12 A2A	06/91 → 02/94	**CT6FMR**		Copper	0.8	04

	kW					CORE		QTY
ROVER								
MONTEGO								
2.0 GTi	86	20 H	10/88 → 10/91	**CW7LPR**		Nickel	0.8	04
	86	20 H	10/88 → 10/91	**CT6FMR**		Copper	0.8	04
2.0 GTI/LXI	75	20 H	12/90 → 12/93	**CT6FM**		Copper	0.8	04
2.0 i Cat	75	20 H	12/90 → 10/94	**CW7LP**	→ 01/92	Nickel	0.8	04
	75	20 H	12/90 → 10/94	**CT6FM**	→ 01/92	Copper	0.8	04
SAAB								
9-3								
1.8 i	90	Z 18 XE	01/04 →	**A5KMR**	01/06 → 01/09	Copper	1.1	04
900 II								
2.5 -24 V6	125	B258I	07/93 → 02/98	**D6KMR**		Copper	0.9	06
9000								
3.0 -24 V6 CD/CDE	155	B308I	07/94 → 12/98	**D6KMR**		Copper	0.9	06
SEAT								
ALHAMBRA								
1.8 T 20V	110	AJH	10/97 → 03/10	**YJT6KMR**	→ 05/00	Copper	1.0	04
	110	AWC	10/97 → 03/10	**YJT6KMR**	→ 05/00	Copper	1.0	04
2.0 i	85	ADY	04/96 → 03/10	**YJT6KMR**		Copper	1.0	04
	85	ATM	04/96 → 03/10	**YJT6KMR**		Copper	1.0	04
ALTEA								
1.6	75	CMXA	03/04 →	**YJT6KMR**		Copper	1.0	04
	75	BSF	03/04 →	**YJT6KMR**		Copper	1.0	04
	75	BSE	03/04 →	**YJT6KMR**		Copper	1.0	04
	75	BGU	03/04 →	**YJT6KMR**		Copper	1.0	04
	75	CCSA	03/04 →	**YJT6KMR**		Copper	1.0	04
1.6 LPG	75	CHGA	09/09 →	**YJT6KMR**		Copper	1.0	04
2.0 FSI	110	BVZ	05/04 → 03/09	**CT6KMR**		Copper	0.8	04
	110	BVY	05/04 → 03/09	**CT6KMR**		Copper	0.8	04
	110	BLY	05/04 → 03/09	**CT6KMR**		Copper	0.8	04
	110	BLR	05/04 → 03/09	**CT6KMR**		Copper	0.8	04
	110	BVZ	05/04 → 03/09	**7LPR**		Nickel	0.8	04
	110	BVY	05/04 → 03/09	**7LPR**		Nickel	0.8	04
	110	BLY	05/04 → 03/09	**7LPR**		Nickel	0.8	04
	110	BLR	05/04 → 03/09	**7LPR**		Nickel	0.8	04
ALTEA XL								
1.6	75	CCSA	10/06 →	**YJT6KMR**		Copper	1.0	04
	75	CMXA	10/06 →	**YJT6KMR**		Copper	1.0	04
	75	BSE	10/06 →	**YJT6KMR**		Copper	1.0	04
	75	BSF	10/06 →	**YJT6KMR**		Copper	1.0	04
1.6 LPG	75	CHGA	09/09 →	**YJT6KMR**		Copper	1.0	04
1.6 Multifuel	75	CCSA	10/06 →	**YJT6KMR**		Copper	1.0	04
2.0 FSI	110	BVY	10/06 → 03/09	**CT6KMR**		Copper	0.8	04
	110	BVZ	10/06 → 03/09	**CT6KMR**		Copper	0.8	04

	kW					CORE		QTY
SEAT								
AROSA								
1.0	37	AHT	10/98 → 01/01	**YJT6KMR**		Copper	1.0	04
	37	AER	05/97 → 06/04	**CJT6FMR**		Copper	0.8	04
	37	AUC	05/97 → 06/04	**CJT6FMR**		Copper	0.8	04
	37	ANV	05/97 → 06/04	**CJT6FMR**		Copper	0.8	04
	37	ALD	05/97 → 06/04	**CJT6FMR**		Copper	0.8	04
	37	ALL	05/97 → 06/04	**CJT6FMR**		Copper	0.8	04
1.4	44	AUD	05/97 → 06/04	**CJT6FMR**		Copper	0.8	04
	44	AKK	05/97 → 06/04	**CJT6FMR**		Copper	0.8	04
	44	AKV	05/97 → 06/04	**CJT6FMR**		Copper	0.8	04
	44	ANW	05/97 → 06/04	**CJT6FMR**		Copper	0.8	04
	44	APQ	05/97 → 06/04	**CJT6FMR**		Copper	0.8	04
	44	AEX	05/97 → 06/04	**CJT6FMR**		Copper	0.8	04
1.4 16V	74	AFK	01/00 → 06/04	**YJT6KMR**		Copper	1.0	04
	74	AQQ	01/00 → 06/04	**YJT6KMR**		Copper	1.0	04
	74	AUB	01/00 → 06/04	**YJT6KMR**		Copper	1.0	04
CORDOBA								
1.0 i	37	AER	09/96 → 06/99	**CJT6FMR**		Copper	0.8	04
1.2	47	AZQ	10/02 → 06/06	**A5KMR**		Copper	1.1	03
	47	BME	10/02 → 06/06	**A5KMR**		Copper	1.1	03
1.4 16V	55	AUA	05/00 → 10/02	**YJT6KMR**		Copper	1.0	04
	55	BKY	09/02 → 12/07	**YJT6KMR**	→ 04/04	Copper	1.0	04
	74	AQQ	02/00 → 10/02	**YJT6KMR**		Copper	1.0	04
	74	BBZ	10/02 → 11/09	**YJT6KMR**		Copper	1.0	04
	74	AUB	02/00 → 10/02	**YJT6KMR**		Copper	1.0	04
	55	APE	05/00 → 10/02	**YJT6KMR**		Copper	1.0	04
	55	BBY	09/02 → 12/07	**YJT6KMR**	→ 04/04	Copper	1.0	04
1.4 i	44	ABD	06/94 → 06/99	**CJT6FMR**		Copper	0.8	04
	44	APQ	06/94 → 06/99	**CJT6FMR**		Copper	0.8	04
	44	AKV	06/94 → 06/99	**CJT6FMR**		Copper	0.8	04
	44	AEX	06/94 → 06/99	**CJT6FMR**		Copper	0.8	04
1.4 i 16V	74	AFH	09/96 → 06/99	**YJT6KMR**		Copper	1.0	04
1.6	55	ABU	06/99 → 12/02	**CJT6FMR**		Copper	0.8	04
	74	AKL	06/99 → 10/02	**YJT6KMR**		Copper	1.0	04
	74	APF	06/99 → 10/02	**YJT6KMR**		Copper	1.0	04
	74	AUR	06/99 → 10/02	**YJT6KMR**		Copper	1.0	04
	74	AEH	06/99 → 10/02	**YJT6KMR**		Copper	1.0	04
	55	ALM	06/99 → 10/02	**CJT6FMR**		Copper	0.8	04
1.6 i	55	1F	05/94 → 06/99	**CJT6FMR**		Copper	0.8	04
	55	AEE	02/93 → 06/99	**CJT6FMR**		Copper	0.8	04
	55	ALM	02/93 → 06/99	**CJT6FMR**		Copper	0.8	04
	55	ABU	02/93 → 06/99	**CJT6FMR**		Copper	0.8	04
	74	AFT	07/96 → 10/99	**YJT6KMR**		Copper	1.0	04
	74	AKL	07/96 → 10/99	**YJT6KMR**		Copper	1.0	04

	kW					CORE		QTY
SEAT								
CORDOBA								
1.8 i	66	ACC	02/93 → 06/99	**CJT6FMR**		Copper	0.8	04
	66	ADZ	02/93 → 06/99	**CJT6FMR**		Copper	0.8	04
	66	ABS	02/93 → 06/99	**CJT6FMR**		Copper	0.8	04
2.0	85	BBX	09/02 → 11/09	**YJT6KMR**		Copper	1.0	04
	85	AZL	09/02 → 11/09	**YJT6KMR**		Copper	1.0	04
EXEO								
1.6	75	ALZ	03/09 → 09/10	**YJT6KMR**		Copper	1.0	04
1.8 T	110	CFMA	12/08 → 05/10	**YJT6KMR**		Copper	1.0	04
IBIZA								
0.9	29	146 A 000	08/90 → 05/93	**CW7LPR**		Nickel	0.8	04
	29	09 NCA	08/90 → 05/93	**CW7LPR**		Nickel	0.8	04
IBIZA II								
1.0	33	AAU	03/93 → 09/96	**CJT6FMR**		Copper	0.8	04
1.0 i	37	AER	09/96 → 08/99	**CJT6FMR**		Copper	0.8	04
1.3 i	40	2G	03/93 → 08/99	**CJT6FMR**		Copper	0.8	04
	40	AAV	03/93 → 08/99	**CJT6FMR**		Copper	0.8	04
1.4 i	44	ABD	09/93 → 08/99	**CJT6FMR**		Copper	0.8	04
	44	AKV	09/93 → 08/99	**CJT6FMR**		Copper	0.8	04
	44	AEX	09/93 → 08/99	**CJT6FMR**		Copper	0.8	04
	44	APQ	09/93 → 08/99	**CJT6FMR**		Copper	0.8	04
1.4 i 16V	74	AFH	06/97 → 08/99	**YJT6KMR**		Copper	1.0	04
1.6 i	55	1F	09/94 → 06/99	**CJT6FMR**		Copper	0.8	04
	55	ABU	03/93 → 08/99	**CJT6FMR**		Copper	0.8	04
	55	AEE	03/93 → 08/99	**CJT6FMR**		Copper	0.8	04
	55	ALM	03/93 → 08/99	**CJT6FMR**		Copper	0.8	04
	74	AFT	04/96 → 08/99	**YJT6KMR**		Copper	1.0	04
1.8 i	66	ACC	03/93 → 08/99	**CJT6FMR**		Copper	0.8	04
	66	ADZ	03/93 → 08/99	**CJT6FMR**		Copper	0.8	04
	66	ABS	03/93 → 08/99	**CJT6FMR**		Copper	0.8	04
2.0 i	85	AGG	03/93 → 08/99	**CJT6FMR**		Copper	0.8	04
	85	2E	03/93 → 08/99	**CJT6FMR**		Copper	0.8	04
IBIZA III								
1.4 16V	55	AUA	05/00 → 02/02	**YJT6KMR**		Copper	1.0	04
	55	APE	05/00 → 02/02	**YJT6KMR**		Copper	1.0	04
	74	AUB	08/99 → 02/02	**YJT6KMR**		Copper	1.0	04
	74	AQQ	08/99 → 02/02	**YJT6KMR**		Copper	1.0	04
1.6	55	ALM	08/99 → 02/02	**CJT6FMR**		Copper	0.8	04
	74	AKL	08/99 → 02/02	**YJT6KMR**		Copper	1.0	04
	74	AUR	08/99 → 02/02	**YJT6KMR**		Copper	1.0	04
	74	AEH	08/99 → 02/02	**YJT6KMR**		Copper	1.0	04
	74	APF	08/99 → 02/02	**YJT6KMR**		Copper	1.0	04
1.8 T 20V Cupra	115	AYP	07/00 → 02/02	**YJT6KMR**		Copper	1.0	04
	115	AQX	07/00 → 02/02	**YJT6KMR**		Copper	1.0	04

	kW					CORE		QTY
SEAT								
IBIZA IV								
1.2	44	BBM	06/07 → 05/08	**A5KMR**		Copper	1.1	03
	47	AZQ	02/02 → 06/06	**A5KMR**		Copper	1.1	03
	47	BME	02/02 → 06/06	**A5KMR**		Copper	1.1	03
1.2 12V	51	BXV	05/06 → 11/09	**A5KMR**		Copper	1.1	03
1.4 16V	55	BKY	02/02 → 12/07	**YJT6KMR**		Copper	1.0	04
	55	BBY	02/02 → 12/07	**YJT6KMR**		Copper	1.0	04
	74	AUB	02/02 → 11/09	**YJT6KMR**		Copper	1.0	04
	74	BBZ	02/02 → 11/09	**YJT6KMR**		Copper	1.0	04
2.0	85	AZL	04/02 → 11/09	**YJT6KMR**	→ 06/07	Copper	1.0	04
	85	BBX	04/02 → 11/09	**YJT6KMR**	→ 06/07	Copper	1.0	04
IBIZA V								
1.2	51	CJLB	03/08 →	**A5KMR**		Copper	1.1	03
	51	CGPA	03/08 →	**A5KMR**		Copper	1.1	03
	51	BZG	03/08 →	**A5KMR**		Copper	1.1	03
2.0	85	CEKA	10/08 →	**YJT6KMR**		Copper	1.0	04
INCA								
1.4 16V	55	AUA	04/00 → 06/03	**YJT6KMR**		Copper	1.0	04
1.6 i	55	AEE	06/97 → 09/00	**CJT6FMR**		Copper	0.8	04
	55	ALM	06/97 → 09/00	**CJT6FMR**		Copper	0.8	04
	55	1F	11/95 → 05/98	**CJT6FMR**		Copper	0.8	04
LEON (1M1)								
1.4 16V	55	BCA	11/99 → 06/06	**YJT6KMR**		Copper	1.0	04
	55	AXP	11/99 → 06/06	**YJT6KMR**		Copper	1.0	04
	55	AHW	11/99 → 06/06	**YJT6KMR**		Copper	1.0	04
	55	APE	11/99 → 06/06	**YJT6KMR**		Copper	1.0	04
	55	AUA	11/99 → 06/06	**YJT6KMR**		Copper	1.0	04
1.6	74	AEH	11/99 → 06/06	**YJT6KMR**		Copper	1.0	04
	74	AKL	11/99 → 06/06	**YJT6KMR**		Copper	1.0	04
	74	APF	11/99 → 06/06	**YJT6KMR**		Copper	1.0	04
	75	BFQ	10/05 → 06/06	**YJT6KMR**		Copper	1.0	04
	75	BGU	10/05 → 06/06	**YJT6KMR**		Copper	1.0	04
1.6 16 V	77	ATN	09/00 → 06/06	**YJT6KMR**		Copper	1.0	04
	77	BCB	09/00 → 06/06	**YJT6KMR**		Copper	1.0	04
	77	AUS	09/00 → 06/06	**YJT6KMR**		Copper	1.0	04
	77	AZD	09/00 → 06/06	**YJT6KMR**		Copper	1.0	04
1.8 20V	92	AGN	11/99 → 06/06	**YJT6KMR**		Copper	1.0	04
	92	APG	11/99 → 06/06	**YJT6KMR**		Copper	1.0	04
1.8 20V T	132	APP	11/99 → 06/06	**YJT6KMR**		Copper	1.0	04
	132	AUQ	11/99 → 06/06	**YJT6KMR**		Copper	1.0	04
LEON (1P1)								
1.6	75	CMXA	07/05 →	**YJT6KMR**		Copper	1.0	04
	75	CCSA	07/05 →	**YJT6KMR**		Copper	1.0	04
	75	BSF	07/05 →	**YJT6KMR**		Copper	1.0	04
	75	BSE	07/05 →	**YJT6KMR**		Copper	1.0	04

	kW					CORE		QTY
SEAT								
LEON (1P1)								
1.6 LPG	75	CHGA	12/09 →	**YJT6KMR**		Copper	1.0	04
1.6 MultiFuel	75	CMXA	11/10 →	**YJT6KMR**		Copper	1.0	04
	75	BSE	11/10 →	**YJT6KMR**		Copper	1.0	04
2.0 FSI	110	BVY	07/05 → 05/10	**CT6KMR**		Copper	0.8	04
	110	BLY	07/05 → 05/10	**CT6KMR**		Copper	0.8	04
	110	BLR	07/05 → 05/10	**CT6KMR**		Copper	0.8	04
	110	BVZ	07/05 → 05/10	**CT6KMR**		Copper	0.8	04
	110	BVY	07/05 → 05/10	**7LPR**		Nickel	0.8	04
	110	BLY	07/05 → 05/10	**7LPR**		Nickel	0.8	04
	110	BLR	07/05 → 05/10	**7LPR**		Nickel	0.8	04
	110	BVZ	07/05 → 05/10	**7LPR**		Nickel	0.8	04
MARBELLA								
0.9	29	09 NCA	01/87 → 12/93	**CW7LPR**		Nickel	0.8	04
	29	100 GL 7000	01/87 → 12/93	**CW7LPR**		Nickel	0.8	04
	29	09 NCA	01/87 → 12/93	**CT6FMR**		Copper	0.8	04
	29	100 GL 7000	01/87 → 12/93	**CT6FMR**		Copper	0.8	04
	32	08 NCB	07/97 → 10/98	**CW7LPR**		Nickel	0.8	04
	32	08 NCB	07/97 → 10/98	**CT6FMR**		Copper	0.8	04
0.9 Cat	29	100 GL 7000	01/90 → 11/96	**CW7LPR**		Nickel	0.8	04
	29	09 NCB	01/90 → 11/96	**CW7LPR**		Nickel	0.8	04
	29	100 GL 7000	01/90 → 11/96	**CT6FMR**		Copper	0.8	04
	29	09 NCB	01/90 → 11/96	**CT6FMR**		Copper	0.8	04
	30	08 NCB	11/96 → 10/98	**CW7LPR**		Nickel	0.8	04
	30	08 NCB	11/96 → 10/98	**CT6FMR**		Copper	0.8	04
TERRA								
0.9	29	09 NCA	02/87 → 12/96	**CT6FMR**		Copper	0.8	04
0.9 Cat	29	09 NCB	02/92 → 12/94	**CT6FMR**		Copper	0.8	04
TOLEDO I								
1.6 i	52	1F	05/91 → 12/93	**CJT6FMR**		Copper	0.8	04
	54	1F	05/91 → 03/99	**YJT6KMR**		Copper	1.0	04
	54	EZ	05/91 → 03/99	**YJT6KMR**		Copper	1.0	04
	54	ABN	05/91 → 03/99	**YJT6KMR**		Copper	1.0	04
	54	1F	05/91 → 03/99	**CJT6FMR**		Copper	0.8	04
	54	EZ	05/91 → 03/99	**CJT6FMR**		Copper	0.8	04
	54	ABN	05/91 → 03/99	**CJT6FMR**		Copper	0.8	04
	55	1F	01/93 → 03/99	**CJT6FMR**		Copper	0.8	04
	74	AFT	11/96 → 03/99	**YJT6KMR**		Copper	1.0	04
1.8 i	66	ACC	11/93 → 12/96	**CJT6FMR**		Copper	0.8	04
	66	ADZ	11/93 → 12/96	**CJT6FMR**		Copper	0.8	04
	66	ABS	11/93 → 12/96	**CJT6FMR**		Copper	0.8	04
2.0 i	85	AGG	05/91 → 03/99	**CJT6FMR**		Copper	0.8	04
	85	2E	05/91 → 03/99	**CJT6FMR**		Copper	0.8	04

	kW					CORE		QTY
SEAT								
TOLEDO II								
1.4 16V	55	AUA	01/00 → 05/02	**YJT6KMR**		Copper	1.0	04
	55	AXP	01/00 → 05/02	**YJT6KMR**		Copper	1.0	04
	55	BCA	01/00 → 05/02	**YJT6KMR**		Copper	1.0	04
	55	AHW	01/00 → 05/02	**YJT6KMR**		Copper	1.0	04
	55	APE	01/00 → 05/02	**YJT6KMR**		Copper	1.0	04
1.6	74	AKL	10/98 → 07/04	**YJT6KMR**		Copper	1.0	04
	74	AEH	10/98 → 07/04	**YJT6KMR**		Copper	1.0	04
	74	APF	10/98 → 07/04	**YJT6KMR**		Copper	1.0	04
1.6 16V	77	BCB	06/00 → 05/06	**YJT6KMR**	→ 07/04	Copper	1.0	04
	77	AUS	06/00 → 05/06	**YJT6KMR**	→ 07/04	Copper	1.0	04
	77	AZD	06/00 → 05/06	**YJT6KMR**	→ 07/04	Copper	1.0	04
1.8 20V	92	AGN	10/98 → 07/04	**YJT6KMR**		Copper	1.0	04
	92	APG	10/98 → 07/04	**YJT6KMR**		Copper	1.0	04
2.3 V5	110	AGZ	10/98 → 11/00	**D6KMR**		Copper	0.9	05
TOLEDO III								
1.6	75	CCSA	10/04 → 05/09	**YJT6KMR**		Copper	1.0	04
	75	BSF	10/04 → 05/09	**YJT6KMR**		Copper	1.0	04
	75	BSE	10/04 → 05/09	**YJT6KMR**		Copper	1.0	04
	75	BGU	10/04 → 05/09	**YJT6KMR**		Copper	1.0	04
2.0 FSI	110	BLY	10/04 → 05/09	**7LPR**		Nickel	0.8	04
	110	BLR	10/04 → 05/09	**7LPR**		Nickel	0.8	04
	110	BVY	10/04 → 05/09	**7LPR**		Nickel	0.8	04
	110	BVZ	10/04 → 05/09	**7LPR**		Nickel	0.8	04
	110	BLY	10/04 → 05/09	**CT6KMR**		Copper	0.8	04
	110	BLR	10/04 → 05/09	**CT6KMR**		Copper	0.8	04
	110	BVY	10/04 → 05/09	**CT6KMR**		Copper	0.8	04
	110	BVZ	10/04 → 05/09	**CT6KMR**		Copper	0.8	04
SKODA								
FABIA (542)								
1.2	44	CHFA	12/07 → 12/14	**A5KMR**	→ 03/10	Copper	1.1	03
	44	BBM	12/07 → 12/14	**A5KMR**	→ 03/10	Copper	1.1	03
	51	CHTA	01/07 → 12/14	**A5KMR**	→ 03/10	Copper	1.1	03
	51	CGPA	01/07 → 12/14	**A5KMR**	→ 03/10	Copper	1.1	03
	51	CEVA	01/07 → 12/14	**A5KMR**	→ 03/10	Copper	1.1	03
	51	BZG	01/07 → 12/14	**A5KMR**	→ 03/10	Copper	1.1	03
FABIA (6Y2)								
1.0	37	ARV	12/99 → 08/02	**YJT6KMR**		Copper	1.0	04
	37	AQV	12/99 → 08/02	**YJT6KMR**		Copper	1.0	04

	kW					CORE		QTY
SKODA								
FABIA (6Y2)								
1.2	40	BMD	08/02 → 03/08	**YJT6KMR**	→ 05/04	Copper	1.0	03
	40	AWY	08/02 → 03/08	**YJT6KMR**	→ 05/04	Copper	1.0	03
	40	BMD	08/02 → 03/08	**A5KMR**	→ 05/04	Copper	1.1	03
	40	AWY	08/02 → 03/08	**A5KMR**	→ 05/04	Copper	1.1	03
	47	BME	01/03 → 03/08	**A5KMR**	→ 11/06	Copper	1.1	03
	47	AZQ	01/03 → 03/08	**A5KMR**	→ 11/06	Copper	1.1	03
1.4 16V	55	BBY	12/99 → 03/08	**YJT6KMR**	08/04 →	Copper	1.0	04
	55	AUA	12/99 → 03/08	**YJT6KMR**	08/04 →	Copper	1.0	04
	55	BKY	12/99 → 03/08	**YJT6KMR**	08/04 →	Copper	1.0	04
	55	BBY	12/99 → 03/08	**A5KMR**	08/04 →	Copper	1.1	04
	55	AUA	12/99 → 03/08	**A5KMR**	08/04 →	Copper	1.1	04
	55	BKY	12/99 → 03/08	**A5KMR**	08/04 →	Copper	1.1	04
	74	BBZ	12/99 → 03/08	**YJT6KMR**		Copper	1.0	04
	74	AUB	12/99 → 03/08	**YJT6KMR**		Copper	1.0	04
2.0	85	AZL	12/99 → 03/08	**YJT6KMR**		Copper	1.0	04
FABIA (6Y3)								
1.2	40	AWY	07/01 → 12/07	**A5KMR**	→ 10/02	Copper	1.1	03
	40	BMD	07/01 → 12/07	**A5KMR**	→ 10/02	Copper	1.1	03
	47	BME	01/03 → 12/07	**A5KMR**		Copper	1.1	03
	47	AZQ	01/03 → 12/07	**A5KMR**		Copper	1.1	03
1.4 16V	55	BKY	10/99 → 12/07	**YJT6KMR**	08/04 →	Copper	1.0	04
	55	BBY	10/99 → 12/07	**YJT6KMR**	08/04 →	Copper	1.0	04
	55	AUA	10/99 → 12/07	**YJT6KMR**	08/04 →	Copper	1.0	04
	55	BKY	10/99 → 12/07	**A5KMR**	08/04 →	Copper	1.1	04
	55	BBY	10/99 → 12/07	**A5KMR**	08/04 →	Copper	1.1	04
	55	AUA	10/99 → 12/07	**A5KMR**	08/04 →	Copper	1.1	04
	74	AUB	12/99 → 12/07	**YJT6KMR**		Copper	1.0	04
	74	BBZ	12/99 → 12/07	**YJT6KMR**		Copper	1.0	04
2.0	85	AZL	12/99 → 12/07	**YJT6KMR**		Copper	1.0	04
FABIA Praktik								
1.2	40	BMD	07/01 → 12/07	**A5KMR**	→ 10/02	Copper	1.1	03
	40	AWY	07/01 → 12/07	**A5KMR**	→ 10/02	Copper	1.1	03
	47	AZQ	01/03 → 12/07	**A5KMR**		Copper	1.1	03
	47	BME	01/03 → 12/07	**A5KMR**		Copper	1.1	03
FAVORIT (781)								
1.3 (781)	50	136B	01/94 → 09/94	**7LPR**		Nickel	0.8	04
	50	136B	01/94 → 09/94	**CT6KMR**		Copper	0.8	04
1.3 135 X,LX,GLX (781)	40	781.135E	01/90 → 09/94	**CT6KMMR**		Copper	0.8	04
FAVORIT Forman (785)								
1.3	50	136B	01/94 → 06/95	**CT6KMR**		Copper	0.8	04
FAVORIT Pick-up (787)								
1.3	50	136B	12/92 → 06/97	**CT6KMR**		Copper	0.8	04

	kW					CORE		QTY
SKODA								
FELICIA								
1.3	50	AMH	10/94 → 03/98	**CT6KMR**		Copper	0.8	04
	50	136B	10/94 → 03/98	**CT6KMR**		Copper	0.8	04
	50	136M	06/97 → 04/02	**CT5KMMR**	→ 03/01	Copper	0.8	04
	50	AMH	10/94 → 03/98	**7LPR**		Nickel	0.8	04
	50	136B	10/94 → 03/98	**7LPR**		Nickel	0.8	04
1.3 LXI	50	AMH	08/95 → 03/98	**CT6KMR**		Copper	0.8	04
1.6	55	AEE	06/97 → 04/02	**CJT6FMR**		Copper	0.8	04
1.6 LX	55	AEE	08/95 → 03/98	**CJT6FMR**		Copper	0.8	04
	55	EA111	08/95 → 03/98	**CJT6FMR**		Copper	0.8	04
FELICIA II								
1.3	43	AMJ	01/98 → 06/01	**CT5KMMR**		Copper	0.8	04
	40	AMG	01/98 → 06/01	**CT5KMMR**		Copper	0.8	04
	50	AMH	01/98 → 06/01	**CT5KMMR**		Copper	0.8	04
1.6	55	AEE	01/98 → 06/01	**CJT6FMR**		Copper	0.8	04
FORMAN								
1.3	50	136B	01/94 → 06/95	**7LPR**		Nickel	0.8	04
	50	136B	01/94 → 06/95	**CT6KMR**		Copper	0.8	04
LAURA								
1.4	55	BCA	05/04 → 05/06	**YJT6KMR**		Copper	1.0	04
1.6	75	CMXA	06/04 → 06/13	**YJT6KMR**		Copper	1.0	04
	75	BSE	06/04 → 06/13	**YJT6KMR**		Copper	1.0	04
	75	BGU	06/04 → 06/13	**YJT6KMR**		Copper	1.0	04
	75	CCSA	06/04 → 06/13	**YJT6KMR**		Copper	1.0	04
	75	BSF	06/04 → 06/13	**YJT6KMR**		Copper	1.0	04
1.6 FSI	85	BLF	02/04 → 10/08	**YJT6KMR**		Copper	1.0	04
1.6 LPG	75	CHGA	08/09 → 11/12	**YJT6KMR**		Copper	1.0	04
1.6 MultiFuel	75	CMXA	01/08 → 06/13	**YJT6KMR**		Copper	1.0	04
	75	CCSA	01/08 → 06/13	**YJT6KMR**		Copper	1.0	04
2.0 FSI	110	BLY	11/04 → 10/08	**CT6KMR**		Copper	0.8	04
	110	BLR	11/04 → 10/08	**CT6KMR**		Copper	0.8	04
	110	BVZ	11/04 → 10/08	**CT6KMR**		Copper	0.8	04
	110	BVY	11/04 → 10/08	**CT6KMR**		Copper	0.8	04
OCTAVIA								
1.4	44	AMD	04/99 → 03/01	**YJT6KMR**		Copper	1.0	04
	55	BCA	05/04 → 05/06	**YJT6KMR**		Copper	1.0	04
1.4 16V	55	BCA	09/00 → 12/10	**YJT6KMR**		Copper	1.0	04
	55	AXP	09/00 → 12/10	**YJT6KMR**		Copper	1.0	04

	kW					CORE		QTY
SKODA								
OCTAVIA								
1.6	55	AEE	09/96 → 09/04	**CJT6FMR**		Copper	0.8	04
	74	AEH	02/97 → 12/07	**YJT6KMR**		Copper	1.0	04
	74	AKL	02/97 → 12/07	**YJT6KMR**		Copper	1.0	04
	75	AVU	11/00 → 12/10	**YJT6KMR**		Copper	1.0	04
	75	BFQ	11/00 → 12/10	**YJT6KMR**		Copper	1.0	04
	75	BGU	06/04 → 06/13	**YJT6KMR**		Copper	1.0	04
	75	BSE	06/04 → 06/13	**YJT6KMR**		Copper	1.0	04
	75	BSF	06/04 → 06/13	**YJT6KMR**		Copper	1.0	04
	75	CCSA	06/04 → 06/13	**YJT6KMR**		Copper	1.0	04
	75	CMXA	06/04 → 06/13	**YJT6KMR**		Copper	1.0	04
1.6 FSI	85	BLF	02/04 → 10/08	**YJT6KMR**		Copper	1.0	04
1.6 LPG	75	CHGA	08/09 → 11/12	**YJT6KMR**		Copper	1.0	04
1.6 MultiFuel	75	CCSA	01/08 → 06/13	**YJT6KMR**		Copper	1.0	04
	75	CMXA	01/08 → 06/13	**YJT6KMR**		Copper	1.0	04
1.8	92	AGN	09/96 → 07/00	**YJT6KMR**		Copper	1.0	04
2.0	85	AEG	04/99 → 05/07	**YJT6KMR**		Copper	1.0	04
	85	APK	04/99 → 05/07	**YJT6KMR**		Copper	1.0	04
	85	AZH	04/99 → 05/07	**YJT6KMR**		Copper	1.0	04
	85	AQY	04/99 → 05/07	**YJT6KMR**		Copper	1.0	04
	85	AZJ	04/99 → 05/07	**YJT6KMR**		Copper	1.0	04
2.0 4x4	85	AZJ	08/00 → 09/04	**YJT6KMR**		Copper	1.0	04
	85	AZH	08/00 → 09/04	**YJT6KMR**		Copper	1.0	04
2.0 FSI	110	BLR	11/04 → 10/08	**CT6KMR**		Copper	0.8	04
	110	BLY	11/04 → 10/08	**7LPR**		Nickel	0.8	04
	110	BLR	11/04 → 10/08	**7LPR**		Nickel	0.8	04
	110	BVZ	11/04 → 10/08	**7LPR**		Nickel	0.8	04
	110	BVY	11/04 → 10/08	**7LPR**		Nickel	0.8	04
	110	BLY	11/04 → 10/08	**CT6KMR**		Copper	0.8	04
	110	BVZ	11/04 → 10/08	**CT6KMR**		Copper	0.8	04
	110	BVY	11/04 → 10/08	**CT6KMR**		Copper	0.8	04
PRAKTIK								
1.2	47	BME	05/06 → 01/07	**A5KMR**		Copper	1.1	03
	51	CGPA	01/07 →	**A5KMR**	→ 03/09	Copper	1.1	03
	51	BZG	01/07 →	**A5KMR**	→ 03/09	Copper	1.1	03
ROOMSTER								
1.2	47	BME	05/06 → 01/07	**A5KMR**		Copper	1.1	03
	51	CGPA	01/07 →	**A5KMR**	→ 03/09	Copper	1.1	03
	51	BZG	01/07 →	**A5KMR**	→ 03/09	Copper	1.1	03
SUPERB								
2.0	85	AZM	12/01 → 03/08	**YJT6KMR**		Copper	1.0	04
2.8 V6	142	AMX	12/01 → 03/08	**D6KMR**		Copper	0.9	06

	kW					CORE		QTY
SMART								
CABRIO (450)								
0.6 (450.432)	52	M 160.920	06/02 → 01/04	**D6KMR**		Copper	0.9	06
0.6 (S1OLA1, 450.441, 450.442, 450.443)	40	M 160.920	03/00 → 01/04	**D6KMR**		Copper	0.9	06
	40	M 160 E6AL B03	03/00 → 01/04	**D6KMR**		Copper	0.9	06
0.6 (S1OLD2, 450.452)	45	M 160 E6AL B05	01/01 → 01/04	**D6KMR**		Copper	0.9	06
	45	M 160.920	01/01 → 01/04	**D6KMR**		Copper	0.9	06
CITY-COUPE (450)								
0.6 (450.330, 450.332)	52	M 160.920	06/02 → 01/04	**D6KMR**		Copper	0.9	06
0.6 (450.352, 450.353)	45	M 160.920	01/01 → 01/04	**D6KMR**		Copper	0.9	06
	45	M 160 E6AL B05	01/01 → 01/04	**D6KMR**		Copper	0.9	06
0.6 (S1CLA1, 450.341)	40	M 160 E6AL B03	07/98 → 01/04	**D6KMR**		Copper	0.9	06
	40	M 160.920	07/98 → 01/04	**D6KMR**		Copper	0.9	06
0.6 (S1CLB1, 450.331, 450.336)	33	M 160 E6AL B04	07/98 → 01/04	**D6KMR**		Copper	0.9	06
	33	M 160.920	07/98 → 01/04	**D6KMR**		Copper	0.9	06
CROSSBLADE (450)								
0.6 (450.418)	52	M 160.920	06/02 → 12/03	**D6KMR**		Copper	0.9	06
FORFOUR (454)								
1.1 (454.030)	55	M 134.910	01/04 → 06/06	**CT6KHMR11**		Copper	1.1	06
1.1 (454.033)	47	M 134.911	02/05 → 06/06	**CT6KHMR11**		Copper	1.1	06
1.3 (454.031)	70	M 135.930	01/04 → 06/06	**CT6KHMR11**		Copper	1.1	06
1.5 (454.032)	80	M 135.950	01/04 → 06/06	**CT6KHMR11**		Copper	1.1	06

SSANGYONG								
CHAIRMAN								
2.3	110	M 111.974	07/97 →	**YJT6KMR**	→ 01/11	Copper	1.0	04
	110	M 111.970	07/97 →	**YJT6KMR**	→ 01/11	Copper	1.0	04
2.8	142	M 104.945	08/99 →	**CT5KMMR**		Copper	0.8	06
	145	M 104.942	07/97 →	**CT5KMMR**		Copper	0.8	06
3.2	162	M 104.992	08/05 → 09/07	**CT5KMMR**		Copper	0.8	06
KORANDO								
2.3	103	M 111.970	05/97 →	**YJT6KMR**	→ 03/99	Copper	1.0	04
	110	M 161.970	01/02 →	**YJT6KMR**	→ 01/11	Copper	1.0	04
3.2	156	M 104.995	01/99 →	**CT5KMMR**	→ 09/05	Copper	0.8	06
	162	M 104.992	06/97 →	**CT5KMMR**		Copper	0.8	06
3.2 (KJ)	154	M 104.995	12/96 →	**CT5KMMR**	→ 09/05	Copper	0.8	06
KYRON								
2.3	110	M 161.970	01/10 →	**YJT6KMR**	→ 01/11	Copper	1.0	04
MUSSO								
2.3	103	M 111.970	10/96 →	**YJT6KMR**		Copper	1.0	04
3.2	162	M 104.992	06/96 →	**CT5KMMR**		Copper	0.8	06

	kW					CORE		QTY
SUBARU								
FORESTER								
2.0 AWD	90	EJ202	08/97 → 09/02	**CT5KMMR11**	→ 06/98	Copper	1.1	04
	92	EJ202	06/98 → 09/02	**CT6KMR11**		Copper	1.1	04
IMPREZA								
1.5	70	EJ15E	11/94 → 08/98	**CT6KMR11**		Copper	1.1	04
1.5 L	66	EJ151	09/98 → 09/00	**CT6KMR11**		Copper	1.1	04
	70	EJ15E	11/95 → 08/98	**CT6KMR11**		Copper	1.1	04
1.6	70	EJ161	09/98 → 09/00	**CT6KMR11**		Copper	1.1	04
1.6 AWD	70	EJ161	12/00 →	**CT6KMR11**	→ 08/05	Copper	1.1	04
	66	EJ161	12/96 → 12/00	**CT6KMR11**		Copper	1.1	04
1.6 i	66	EJ16	08/92 → 12/00	**CT6KMR11**		Copper	1.1	04
	70	EJ161	06/98 → 12/00	**CT6KMR11**		Copper	1.1	04
1.6 i AWD	66	EJ16	08/92 → 12/00	**CT6KMR11**		Copper	1.1	04
	70	EJ161	06/98 → 12/00	**CT6KMR11**		Copper	1.1	04
1.8 AWD	76	EJ18	01/93 → 10/95	**CT6KMR11**		Copper	1.1	04
1.8 i	76	EJ18E	11/95 → 06/96	**CT6KMR11**		Copper	1.1	04
1.8 i AWD	76	EJ18	08/92 → 12/00	**CT6KMR11**		Copper	1.1	04
2.0	85	EJ20E	09/96 → 08/98	**CT6KMR11**		Copper	1.1	04
2.0 AWD	85	EJ20E	12/95 → 12/00	**CT5KMMR11**	→ 09/98	Copper	1.1	04
	85	EJ201	12/95 → 12/00	**CT5KMMR11**	→ 09/98	Copper	1.1	04
2.0 i	85	EJ20E	11/95 → 09/00	**CT6KMR11**	→ 09/98	Copper	1.1	04
2.0 i 16V AWD	92	EJ20E	06/98 → 12/00	**CT5KMMR11**		Copper	1.1	04
2.0 i AWD	85	EJ20E	12/95 → 12/00	**CT5KMMR11**	→ 09/98	Copper	1.1	04
	92	EJ201	06/98 → 12/00	**CT5KMMR11**		Copper	1.1	04
	85	EJ201	12/95 → 12/00	**CT5KMMR11**	→ 09/98	Copper	1.1	04
2.0 SW	85	EJ20E	09/96 → 08/98	**CT6KMR11**		Copper	1.1	04
2.2 GX AWD	97	EJ22	11/95 → 08/98	**CT6KMR11**		Copper	1.1	04
	97	EJ22	01/02 →	**CT6KMR11**		Copper	1.1	04
LEGACY I								
1.6	70	EJ16	05/89 → 12/93	**CT6KMR11**		Copper	1.1	04
1800	76	EJ18 SPI	01/89 → 12/93	**CT6KMR11**		Copper	1.1	04
1800 4WD	76	EJ18 SPI	01/89 → 09/91	**CT6KMR11**		Copper	1.1	04
2.0	85	EJ20E	08/91 → 12/93	**CT6KMR11**		Copper	1.1	04
2.0 CVT	85	EJ20E	08/91 → 12/93	**CT6KMR11**		Copper	1.1	04
2200 4WD	100	EJ22 EMPI	01/89 → 07/94	**CT6KMR11**		Copper	1.1	04
LEGACY II								
2.0 CVT	85	EJ20E	09/94 → 03/99	**CT6KMR11**		Copper	1.1	04
2.0 i	85	EJ20E	09/94 → 03/99	**CT6KMR11**		Copper	1.1	04
2.0 i 4WD	85	EJ20E	09/94 → 03/99	**CT6KMR11**		Copper	1.1	04
	85	EJ201	09/94 → 03/99	**CT6KMR11**		Copper	1.1	04
2.2	94	EJ22	07/94 → 11/98	**CT6KMR11**	→ 06/97	Copper	1.1	04
2.2 i 4WD	94	EJ22 EMPI	09/94 → 03/99	**CT6KMR11**		Copper	1.1	04
	96	EJ22 EMPI	06/96 → 03/99	**CT6KMR11**	→ 06/97	Copper	1.1	04

	kW					CORE		QTY
SUBARU								
LEGACY III								
2.0 AWD	92	EJ201	04/99 → 08/03	**CT5KMMR11**		Copper	1.1	04
2.5 AWD	115	EJ25	10/98 → 08/03	**CT5KMMR11**		Copper	1.1	04
LEONE II								
1800 4WD	72	EA82	01/88 → 12/90	**CW7LPR**		Nickel	0.8	04
	88	EA82T	01/88 → 12/90	**CW7LPR**		Nickel	0.8	04
LIBERTY I								
1.6	70	EJ16	05/89 → 12/93	**CT6KMR11**		Copper	1.1	04
1800	76	EJ18 SPI	01/89 → 12/93	**CT6KMR11**		Copper	1.1	04
1800 4WD	76	EJ18 SPI	01/89 → 09/91	**CT6KMR11**		Copper	1.1	04
2.0	85	EJ20E	08/91 → 12/93	**CT6KMR11**		Copper	1.1	04
2.0 CVT	85	EJ20E	08/91 → 12/93	**CT6KMR11**		Copper	1.1	04
2200 4WD	100	EJ22 EMPI	01/89 → 07/94	**CT6KMR11**		Copper	1.1	04
LIBERTY II								
2.0 CVT	85	EJ20E	09/94 → 03/99	**CT6KMR11**		Copper	1.1	04
2.0 i	85	EJ20E	09/94 → 03/99	**CT6KMR11**		Copper	1.1	04
2.0 i 4WD	85	EJ201	09/94 → 03/99	**CT6KMR11**		Copper	1.1	04
	85	EJ20E	09/94 → 03/99	**CT6KMR11**		Copper	1.1	04
2.2	94	EJ22	07/94 → 11/98	**CT6KMR11**	→ 06/97	Copper	1.1	04
2.2 i 4WD	94	EJ22 EMPI	09/94 → 03/99	**CT6KMR11**		Copper	1.1	04
	96	EJ22 EMPI	06/96 → 03/99	**CT6KMR11**	→ 06/97	Copper	1.1	04
LIBERTY III								
2.0 AWD	92	EJ201	04/99 → 08/03	**CT5KMMR11**		Copper	1.1	04
2.5 AWD	115	EJ25	10/98 → 08/03	**CT5KMMR11**		Copper	1.1	04
LIBERTY OUTBACK								
2.5 AWD	115	EJ25	10/00 → 08/03	**CT5KMMR11**		Copper	1.1	04
MINI JUMBO								
0.7	35	EN07E	07/90 → 03/92	**CT6KMR11**		Copper	1.1	04
	47	EN07Z	07/90 → 02/92	**CT6KMR11**		Copper	1.1	04
0.7 4WD	35	EN07E	07/90 → 03/92	**CT6KMR11**		Copper	1.1	04
0.7 Kompressor 4WD	47	EN07Z	07/90 → 02/92	**CT6KMR11**		Copper	1.1	04
OUTBACK								
2.5 AWD	115	EJ25	10/00 → 08/03	**CT5KMMR11**		Copper	1.1	04
REX								
0.7	35	EN07E	07/90 → 03/92	**CT6KMR11**		Copper	1.1	04
	47	EN07Z	07/90 → 02/92	**CT6KMR11**		Copper	1.1	04
0.7 4WD	35	EN07E	07/90 → 03/92	**CT6KMR11**		Copper	1.1	04
0.7 Kompressor 4WD	47	EN07Z	07/90 → 02/92	**CT6KMR11**		Copper	1.1	04
REX III								
0.7	35	EN07E	07/90 → 03/92	**CT6KMR11**		Copper	1.1	04
	47	EN07Z	07/90 → 02/92	**CT6KMR11**		Copper	1.1	04
0.7 4WD	35	EN07E	07/90 → 03/92	**CT6KMR11**		Copper	1.1	04

	kW					CORE		QTY
SUBARU								
REX III								
0.7 Kompressor 4WD	47	EN07Z	07/90 → 02/92	**CT6KMR11**		Copper	1.1	04
VIVIO								
0.7	32	EN07E	08/92 → 12/98	**CT5KMMR11**	→ 10/95	Copper	1.1	04
	32	EN07E	08/92 → 12/98	**CT6KMR11**	→ 10/95	Copper	1.1	04
660 4WD	32	EN07E	03/92 → 10/95	**CT6KMR11**		Copper	1.1	04
660 i GLI	32	EN07E	08/92 → 12/98	**CT5KMMR11**	→ 10/95	Copper	1.1	04
	32	EN07E	08/92 → 12/98	**CT6KMR11**	→ 10/95	Copper	1.1	04
SUZUKI								
ALTO								
1.0	43	G10BB	01/00 → 06/02	**7LPR**		Nickel	0.8	04
	43	G10BB	01/00 → 06/02	**CT6KMR**		Copper	0.8	04
1.1 (RF410)	46	F10DN	09/04 → 12/08	**CT7DKMR**		Copper	0.8	04
	46	F10D	09/04 → 12/08	**CT7DKMR**		Copper	0.8	04
1.6	71	G16B	10/98 → 09/00	**7LPR**		Nickel	0.8	04
	71	G16B	10/98 → 09/00	**CT6KMR**		Copper	0.8	04
BALENO								
1.3 (SY413)	52	G13BA	09/96 → 05/02	**7LPR**		Nickel	0.8	04
	52	G13BA	09/96 → 05/02	**CT6KMR**		Copper	0.8	04
1.3 16V (SY413)	63	G13BB	03/97 → 05/02	**CT6KMR**		Copper	0.8	04
1.3 i 16V (SY413)	63	G13BB	07/95 → 05/02	**7LPR**		Nickel	0.8	04
	63	G13BB	07/95 → 05/02	**CT6KMR**		Copper	0.8	04
1.6 GS 16V (SY416)	73	G16B	08/96 → 05/02	**CT6KMR**		Copper	0.8	04
1.6 i 16V (SY416)	73	G16B	08/96 → 05/02	**CT6KMR**		Copper	0.8	04
	72	G16B	07/95 → 05/02	**7LPR**		Nickel	0.8	04
	72	G16B	07/95 → 05/02	**CT6KMR**		Copper	0.8	04
1.6 i 16V 4x4 (SY416)	73	G16B	08/96 → 05/02	**CT6KMR**		Copper	0.8	04
	72	G16B	07/95 → 05/02	**7LPR**		Nickel	0.8	04
	72	G16B	07/95 → 05/02	**CT6KMR**		Copper	0.8	04
1.8 GTX (SY418)	89	J18A	03/96 → 05/02	**CT6KMR11**		Copper	1.1	04
1.8 i 16V (SY418)	89	J18A	08/96 → 05/02	**CT6KMR11**		Copper	1.1	04
CARRY								
1.3	58	G13BB	03/99 →	**CW7LPR**		Nickel	0.8	04
	58	G13BB	03/99 →	**CT6FMR**		Copper	0.8	04
1.3 16 V	58	G13BB	03/00 →	**7LPR**	→ 01/04	Nickel	0.8	04
	58	G13BB	03/00 →	**CT6KMR**	→ 01/04	Copper	0.8	04
1.3 4x4	56	G13BB	02/99 → 09/04	**7LPR**		Nickel	0.8	04
	56	G13BB	02/99 → 09/04	**CT6KMR**		Copper	0.8	04
GRAND ESCUDO I								
2.0 (SQ 420)	94	J20A	03/98 → 07/03	**CT6KMR11**		Copper	1.1	04
2.0 4x4 (SQ 420)	94	J20A	03/98 → 07/03	**CT6KMR11**		Copper	1.1	04
2.0 i 16V (SQ 420)	94	J20A	03/98 → 07/03	**CT6KMR11**		Copper	1.1	04
2.5 V6 24V (SQ 625)	116	H 25 A	04/01 → 07/03	**CT6KMR11**		Copper	1.1	06

	kW					CORE		QTY
SUZUKI								
GRAND ESCUDO I								
2.5 V6 24V (TD62, SQ 625)	106	H 25 A	04/98 → 07/03	**CT6KMR11**		Copper	1.1	06
2.5 V6 24V 4x4 (SQ 625)	106	H 25 A	04/98 → 07/03	**CT6KMR11**		Copper	1.1	06
	116	H 25 A	04/01 → 07/03	**CT6KMR11**		Copper	1.1	06
2.7 (JA 627)	135	H 27 A	04/03 → 07/03	**CT6KMR11**		Copper	1.1	06
2.7 (TX92, JA 627)	135	H 27 A	04/03 → 07/03	**CT6KMR11**		Copper	1.1	06
2.7 4x4 (JA 627)	127	H 27 A	09/01 → 07/03	**CT6KMR11**		Copper	1.1	06
	135	H 27 A	04/03 → 07/03	**CT6KMR11**		Copper	1.1	06
GRAND ESCUDO II								
1.6 (TA74, JB416)	73	M16A	09/05 →	**CT6KMR11**		Copper	1.1	04
1.6 Trazione integrale (JB416)	73	M16A	09/05 →	**CT6KMR11**		Copper	1.1	04
	78	M16A	04/05 →	**CT6KMR11**		Copper	1.1	04
2.0 (TD54, JB420)	103	J20A	10/05 →	**CT6KMR11**		Copper	1.1	04
2.0 SZ (JB420)	103	J20A	10/05 →	**CT6KMR11**		Copper	1.1	04
2.0 Trazione integrale (JB420)	103	J20A	10/05 →	**CT6KMR11**		Copper	1.1	04
2.4 (JB424)	122	J24B	01/09 →	**CT5KHMR11**		Copper	1.1	04
2.4 (JT424, JB424)	122	J24B	01/09 →	**CT5KHMR11**		Copper	1.1	04
2.4 Trazione integrale (JB424)	120	J24B	09/13 →	**CT5KHMR11**		Copper	1.1	04
	122	J24B	01/09 →	**CT5KHMR11**		Copper	1.1	04
	124	J24B	01/09 →	**CT5KHMR11**		Copper	1.1	04
GRAND VITARA I								
2.0 (SQ 420)	94	J20A	03/98 → 07/03	**CT6KMR11**		Copper	1.1	04
2.0 4x4 (SQ 420)	94	J20A	03/98 → 07/03	**CT6KMR11**		Copper	1.1	04
2.0 i 16V (SQ 420)	94	J20A	03/98 → 07/03	**CT6KMR11**		Copper	1.1	04
2.5 V6 24V (SQ 625)	116	H 25 A	04/01 → 07/03	**CT6KMR11**		Copper	1.1	06
2.5 V6 24V (TD62, SQ 625)	106	H 25 A	04/98 → 07/03	**CT6KMR11**		Copper	1.1	06
2.5 V6 24V 4x4 (SQ 625)	106	H 25 A	04/98 → 07/03	**CT6KMR11**		Copper	1.1	06
	116	H 25 A	04/01 → 07/03	**CT6KMR11**		Copper	1.1	06
2.7 (JA 627)	135	H 27 A	04/03 → 07/03	**CT6KMR11**		Copper	1.1	06
2.7 (TX92, JA 627)	135	H 27 A	04/03 → 07/03	**CT6KMR11**		Copper	1.1	06
2.7 4x4 (JA 627)	127	H 27 A	09/01 → 07/03	**CT6KMR11**		Copper	1.1	06
	135	H 27 A	04/03 → 07/03	**CT6KMR11**		Copper	1.1	06
GRAND VITARA II								
1.6 (TA74, JB416)	73	M16A	09/05 →	**CT6KMR11**		Copper	1.1	04
1.6 Trazione integrale (JB416)	73	M16A	09/05 →	**CT6KMR11**		Copper	1.1	04
	78	M16A	04/05 →	**CT6KMR11**		Copper	1.1	04
2.0 (TD54, JB420)	103	J20A	10/05 →	**CT6KMR11**		Copper	1.1	04
2.0 SZ (JB420)	103	J20A	10/05 →	**CT6KMR11**		Copper	1.1	04
2.0 Trazione integrale (JB420)	103	J20A	10/05 →	**CT6KMR11**		Copper	1.1	04

	kW					CORE		QTY
SUZUKI								
GRAND VITARA II								
2.4 (JB424)	122	J24B	01/09 →	**CT5KHMR11**		Copper	1.1	04
2.4 (JT424, JB424)	122	J24B	01/09 →	**CT5KHMR11**		Copper	1.1	04
2.4 Trazione integrale (JB424)	120	J24B	09/13 →	**CT5KHMR11**		Copper	1.1	04
	122	J24B	01/09 →	**CT5KHMR11**		Copper	1.1	04
	124	J24B	01/09 →	**CT5KHMR11**		Copper	1.1	04
GRAND VITARA XL-7 I								
2.0 (SQ 420)	94	J20A	03/98 → 07/03	**CT6KMR11**		Copper	1.1	04
2.0 4x4 (SQ 420)	94	J20A	03/98 → 07/03	**CT6KMR11**		Copper	1.1	04
2.0 i 16V (SQ 420)	94	J20A	03/98 → 07/03	**CT6KMR11**		Copper	1.1	04
2.5 V6 24V (SQ 625)	116	H 25 A	04/01 → 07/03	**CT6KMR11**		Copper	1.1	06
2.5 V6 24V (TD62, SQ 625)	106	H 25 A	04/98 → 07/03	**CT6KMR11**		Copper	1.1	06
2.5 V6 24V 4x4 (SQ 625)	106	H 25 A	04/98 → 07/03	**CT6KMR11**		Copper	1.1	06
	116	H 25 A	04/01 → 07/03	**CT6KMR11**		Copper	1.1	06
2.7 (JA 627)	135	H 27 A	04/03 → 07/03	**CT6KMR11**		Copper	1.1	06
2.7 (TX92, JA 627)	135	H 27 A	04/03 → 07/03	**CT6KMR11**		Copper	1.1	06
2.7 4x4 (JA 627)	127	H 27 A	09/01 → 07/03	**CT6KMR11**		Copper	1.1	06
	135	H 27 A	04/03 → 07/03	**CT6KMR11**		Copper	1.1	06
GRAND VITARA XL-7 II								
1.6 (TA74, JB416)	73	M16A	09/05 →	**CT6KMR11**		Copper	1.1	04
1.6 Trazione integrale (JB416)	73	M16A	09/05 →	**CT6KMR11**		Copper	1.1	04
	78	M16A	04/05 →	**CT6KMR11**		Copper	1.1	04
2.0 (TD54, JB420)	103	J20A	10/05 →	**CT6KMR11**		Copper	1.1	04
2.0 SZ (JB420)	103	J20A	10/05 →	**CT6KMR11**		Copper	1.1	04
2.0 Trazione integrale (JB420)	103	J20A	10/05 →	**CT6KMR11**		Copper	1.1	04
2.4 (JB424)	122	J24B	01/09 →	**CT5KHMR11**		Copper	1.1	04
2.4 (JT424, JB424)	122	J24B	01/09 →	**CT5KHMR11**		Copper	1.1	04
2.4 Trazione integrale (JB424)	120	J24B	09/13 →	**CT5KHMR11**		Copper	1.1	04
	122	J24B	01/09 →	**CT5KHMR11**		Copper	1.1	04
	124	J24B	01/09 →	**CT5KHMR11**		Copper	1.1	04
IGNIS								
1.3 (RG413)	61	M13A	10/00 → 09/03	**CT6KMR11**		Copper	1.1	04
1.3 1.3 i 16V (RG413)	61	M13A	10/00 → 09/03	**CT6KMR11**		Copper	1.1	04
1.3 4WD (RG413)	61	M13A	10/00 → 09/03	**CT6KMR11**		Copper	1.1	04
JIMNY								
1.0 (SJ 413)	47	G13A	11/88 → 12/04	**CT5FMR**		Copper	0.8	04
1.0 Trazione integrale (SJ 410)	33	F10A	11/88 → 12/04	**CT5FMR**		Copper	0.8	04
1.3 16V (SN413)	59	G13BB	09/98 →	**7LPR**		Nickel	0.8	04
	59	G13BB	09/98 →	**CT6KMR**		Copper	0.8	04
1.3 16V 4WD (SN413)	59	G13BB	09/98 →	**7LPR**		Nickel	0.8	04
	59	G13BB	09/98 →	**CT6KMR**		Copper	0.8	04

	kW					CORE		QTY
SUZUKI								
JIMNY								
1.3 JX Trazione integrale (SJ 413)	44	G13A	11/88 → 12/04	**CT5FMR**		Copper	0.8	04
1.3 Trazione integrale (SJ 413)	44	G13A	11/88 → 12/04	**CT5FMR**		Copper	0.8	04
1.3 Trazione integrale (SJ 413)	47	G13A	11/88 → 12/04	**CT5FMR**		Copper	0.8	04
1.6 VVT	76	M16A	05/04 →	**CT6KMR11**		Copper	1.1	04
JIMNY SIERRA								
1.3 16V (SN413)	59	G13BB	09/98 →	**CT6KMR**		Copper	0.8	04
1.3 16V 4WD (SN413)	59	G13BB	09/98 →	**CT6KMR**		Copper	0.8	04
1.6 VVT	76	M16A	05/04 →	**CT6KMR11**		Copper	1.1	04
LIANA								
1.6 (RH 416)	76	M16A	03/02 →	**CT6KMR11**		Copper	1.1	04
1.6 4WD (RH 416)	76	M16A	03/02 →	**CT6KMR11**	02/04 →	Copper	1.1	04
	78	M16A	04/02 →	**CT6KMR11**	→ 01/04	Copper	1.1	04
1.6 i	78	M16A	04/02 →	**CT6KMR11**	02/04 →	Copper	1.1	04
SAMURAI								
1.0 (SJ 413)	47	G13A	11/88 → 12/04	**CT5FMR**		Copper	0.8	04
1.0 Trazione integrale (SJ 410)	33	F10A	11/88 → 12/04	**CT5FMR**		Copper	0.8	04
1.3 JX Trazione integrale (SJ 413)	44	G13A	11/88 → 12/04	**CT5FMR**		Copper	0.8	04
1.3 Trazione integrale (SJ 413)	44	G13A	11/88 → 12/04	**CT5FMR**		Copper	0.8	04
	47	G13A	11/88 → 12/04	**CT5FMR**		Copper	0.8	04
SIERRA								
1.0 (SJ 413)	47	G13A	11/88 → 12/04	**CT5FMR**		Copper	0.8	04
1.0 Trazione integrale (SJ 410)	33	F10A	11/88 → 12/04	**CT5FMR**		Copper	0.8	04
1.3 JX Trazione integrale (SJ 413)	44	G13A	11/88 → 12/04	**CT5FMR**		Copper	0.8	04
1.3 Trazione integrale (SJ 413)	44	G13A	11/88 → 12/04	**CT5FMR**		Copper	0.8	04
	47	G13A	11/88 → 12/04	**CT5FMR**		Copper	0.8	04
SWIFT II								
1.0 (SF310, AA44)	37	G10A	03/89 → 05/01	**CW7LPR**	09/96 →	Nickel	0.8	03
	37	G10A	03/89 → 05/01	**CT6FMR**	09/96 →	Copper	0.8	03
1.0 i (SF310, AA44)	39	G10A	01/95 → 12/05	**CW7LPR**	09/96 →	Nickel	0.8	03
	40	G10A	03/89 → 12/91	**CW7LPR**		Nickel	0.8	03
	39	G10A	01/95 → 12/05	**CT6FMR**	09/96 →	Copper	0.8	03
	40	G10A	03/89 → 12/91	**CT6FMR**		Copper	0.8	03
1.3 (SF 413)	51	G13BA	03/89 → 10/96	**CW7LPR**	09/96 →	Nickel	0.8	04
	63	G13BB	06/01 → 12/03	**CW7LPR**		Nickel	0.8	04
	51	G13BA	03/89 → 10/96	**CT6FMR**	09/96 →	Copper	0.8	04
	63	G13BB	06/01 → 12/03	**CT6FMR**		Copper	0.8	04

	kW					CORE		QTY
SUZUKI								
SWIFT II								
1.3 (SF413, AB35)	50	G13A	03/89 → 05/01	**CW7LPR**	→ 08/96	Nickel	0.8	04
	50	G13A	03/89 → 05/01	**CT6FMR**	→ 08/96	Copper	0.8	04
1.3 4WD (SF413, AF35)	52	G13A	10/89 → 12/91	**CW7LPR**		Nickel	0.8	04
	52	G13A	10/89 → 12/91	**CT6FMR**		Copper	0.8	04
1.3 CINO (SF413, AB35)	50	G13A	03/89 → 05/01	**CW7LPR**	→ 08/96	Nickel	0.8	04
	50	G13A	03/89 → 05/01	**CT6FMR**	→ 08/96	Copper	0.8	04
1.3 GTi (SF413, AA34)	74	G13B	03/89 → 05/01	**CW7LPR**	→ 08/96	Nickel	0.8	04
	74	G13B	03/89 → 05/01	**CT6FMR**	→ 08/96	Copper	0.8	04
SX4								
1.6 (RW 416)	74	M16A	06/06 →	**CT5KHMR11**		Copper	1.1	04
1.6 VVT (RW 416)	79	M16A	06/06 →	**CT5KHMR11**		Copper	1.1	04
1.6 VVT 4x4 (RW 416)	79	M16A	06/06 →	**CT5KHMR11**		Copper	1.1	04
2.0	107	J20A	06/06 →	**CT5KHMR11**		Copper	1.1	04
2.0 4x4	107	J20A	06/06 →	**CT5KHMR11**		Copper	1.1	04
VITARA								
1.6 (SE 416)	60	G16A (8V)	07/88 → 12/91	**CT5FMR**		Copper	0.8	04
	70	G16B	02/91 → 03/98	**7LPR**		Nickel	0.8	04
	70	G16B	02/91 → 03/98	**CT6KMR**		Copper	0.8	04
1.6 (TA, TA01, SE416)	59	G16A (8V)	07/88 → 03/98	**CT5FMR**		Copper	0.8	04
1.6 i 16V (ET, TA02, SE416)	71	G16B	07/90 → 03/98	**7LPR**		Nickel	0.8	04
	71	G16B	07/90 → 03/98	**CT6KMR**		Copper	0.8	04
1.6 i 16V Trazione integrale (ET, TA02)	71	G16B	07/90 → 03/98	**7LPR**		Nickel	0.8	04
	71	G16B	07/90 → 03/98	**CT6KMR**		Copper	0.8	04
1.6 i 4x4 (SE 416)	60	G16A (8V)	07/88 → 12/91	**CT5FMR**		Copper	0.8	04
1.6 i JLX (SE 416)	70	G16B	02/91 → 03/98	**7LPR**		Nickel	0.8	04
	70	G16B	02/91 → 03/98	**CT6KMR**		Copper	0.8	04
1.6 Trazione integrale (SE 416)	54	G16A (8V)	10/88 →	**CT5FMR**		Copper	0.8	04
	60	G16A (8V)	07/88 → 12/91	**CT5FMR**		Copper	0.8	04
1.6 Trazione integrale (TA, TA01)	59	G16A (8V)	07/88 → 03/98	**CT5FMR**		Copper	0.8	04
2.0 16V (SV420)	97	J20A	12/96 → 03/98	**7LPR**		Nickel	0.8	04
	97	J20A	12/96 → 03/98	**CT6KMR**		Copper	0.8	04
2.0 16V Trazione integrale (SV420)	97	J20A	12/96 → 03/98	**7LPR**		Nickel	0.8	04
	97	J20A	12/96 → 03/98	**CT6KMR**		Copper	0.8	04
2.0 V6 24V (SV620)	100	H 20 A	12/94 → 03/98	**7LPR**		Nickel	0.8	06
	100	H 20 A	12/94 → 03/98	**CT6KMR**		Copper	0.8	06
2.0 V6 24V Trazione integrale (SV620)	100	H 20 A	12/94 → 03/98	**7LPR**		Nickel	0.8	06
	100	H 20 A	12/94 → 03/98	**CT6KMR**		Copper	0.8	06
2.5 V6 24V Trazione integrale (FT)	118	H 25 A	12/95 → 03/98	**7LPR**		Nickel	0.8	06
	118	H 25 A	12/95 → 03/98	**CT6KMR**		Copper	0.8	06

	kW					CORE		QTY
SUZUKI								
VITARA								
V6 24V (SV620)	100	H 20 A	12/94 → 03/98	**7LPR**		Nickel	0.8	06
	100	H 20 A	12/94 → 03/98	**CT6KMR**		Copper	0.8	06
WAGON R								
1.2	59	Z 12 XEP	06/04 → 08/05	**A5KMR**		Copper	1.1	04
WAGON R+								
1.0 (SR410)	48	K10A	02/98 → 05/00	**CT7DKMR**		Copper	0.8	04
1.2 (SR412)	51	K12A	02/98 → 05/00	**CT7DKMR**		Copper	0.8	04
1.2 4WD (SR412)	51	K12A	02/98 → 05/00	**CT7DKMR**		Copper	0.8	04
1.3 (RB 413)	56	G13BB	05/00 → 12/04	**CT6KMR11**		Copper	1.1	04
	69	M13A	09/03 →	**CT6KMR11**	→ 01/08	Copper	1.1	04
1.3 4WD (RB 413)	56	G13BB	10/01 →	**CT6KMR11**	→ 01/08	Copper	1.1	04
X-90								
1.6 i 16V (SZ 416)	71	G16B	09/95 → 12/97	**7LPR**		Nickel	0.8	04
1.6 i 16V 4x4	71	G16B	09/95 → 12/97	**7LPR**		Nickel	0.8	04
1.6 i 16V (SZ 416)	71	G16B	09/95 →	**CT6KMR**		Copper	0.8	04
1.6 i 16V 4x4	71	G16B	09/95 → 12/97	**CT6KMR**		Copper	0.8	04

TOYOTA								
4 RUNNER								
2.7	112	3RZ-FE	11/95 → 07/02	**CT5KMR**		Copper	0.8	04
2.7 4WD	112	3RZ-FE	11/95 → 08/02	**CT5KMR**		Copper	0.8	04
3.0 (VZN130_, VZN131_)	105	3VZ-E	07/90 → 11/95	**CT5KMR**		Copper	0.8	06
4.0 VVTi	183	1GR-FE	08/02 → 11/02	**CT6KHMR11**		Copper	1.1	06
ALLION I								
1.5	80	1NZ-FE	06/01 → 04/05	**CT5KMR11**		Copper	1.1	04
1.8	97	1ZZ-FE	06/01 → 04/05	**CT5KMR11**		Copper	1.1	04
ALTIS								
1.3 (NZE120_)	64	2NZ-FE	11/01 → 05/04	**CT5KMR11**		Copper	1.1	04
1.3 VVT-i	63	2NZ-FE	03/08 →	**CT5KMR11**		Copper	1.1	04
1.4 VVT-i	71	4ZZ-FE	01/07 →	**CT5KMR11**		Copper	1.1	04
1.4 VVT-i (ZZE120_)	71	4ZZ-FE	08/02 → 07/07	**CT5KMR11**		Copper	1.1	04
1.5	81	1NZ-FE	06/07 → 07/07	**CT5KMR11**		Copper	1.1	04
1.5 (ZZA120_, ZZE123_)	80	1NZ-FE	11/01 → 07/07	**CT5KMR11**		Copper	1.1	04
1.5 G 4WD	80	1NZ-FE	11/01 → 05/04	**CT5KMR11**		Copper	1.1	04
1.6 VVT-i (ZZE121_)	81	3ZZ-FE	08/02 → 07/07	**CT5KMR11**		Copper	1.1	04
1.6 XLI S/D (ZZE121_)	81	3ZZ-FE	08/02 → 07/07	**CT5KMR11**		Copper	1.1	04
1.8	92	1ZZ-FE	05/02 → 05/04	**CT5KMR11**		Copper	1.1	04
	96	1ZZ-FE	03/01 → 07/05	**CT5KMR11**		Copper	1.1	04
	100	1ZZ-FE	11/01 → 07/07	**CT5KMR11**		Copper	1.1	04

	kW					CORE		QTY
TOYOTA								
ALTIS								
1.8 SE-G	100	1ZZ-FE	11/01 → 07/07	**CT5KMR11**		Copper	1.1	04
AURIS								
1.4 (ZZE150_)	71	4ZZ-FE	03/07 →	**CT5KMR11**		Copper	1.1	04
AVENSIS								
1.6 (ZZT220_)	81	3ZZ-FE	10/00 → 02/03	**CT5KMR11**		Copper	1.1	04
	81	3ZZ-FE	10/00 → 02/03	**CT5KMR11**		Copper	1.1	04
1.6 VVT-i (ZZT220_)	81	3ZZ-FE	10/00 → 02/03	**CT5KMR11**		Copper	1.1	04
1.6 VVT-i (ZZT250_)	81	3ZZ-FE	04/03 → 11/08	**CT5KMR11**		Copper	1.1	04
1.8 (ZZT221_)	95	1ZZ-FE	10/00 → 02/03	**CT5KMR11**		Copper	1.1	04
1.8 (ZZT251_)	95	1ZZ-FE	04/03 → 11/08	**CT5KMR11**		Copper	1.1	04
1.8 VVT-i (ZZT221_)	95	1ZZ-FE	10/00 → 02/03	**CT5KMR11**		Copper	1.1	04
BLADE								
1.4 (ZZE150_)	71	4ZZ-FE	03/07 →	**CT5KMR11**		Copper	1.1	04
CARINA E								
1.5 SG	77	5A-FE	04/92 → 09/97	**CT5KMR11**		Copper	1.1	04
1.6 GLI (AT190_)	79	4A-FE	01/93 → 09/97	**CT5KMR11**		Copper	1.1	04
CELICA								
1.8 16V VT-i (ZZT230_)	105	1ZZ-FE	08/99 → 07/05	**CT5KMR11**		Copper	1.1	04
COROLLA								
1.3 (NZE120_)	64	2NZ-FE	11/01 → 05/04	**CT5KMR11**		Copper	1.1	04
1.3 VVT-i	63	2NZ-FE	03/08 →	**CT5KMR11**		Copper	1.1	04
1.4 (ZZE111_)	71	4ZZ-FE	02/00 → 01/02	**CT5KMR11**		Copper	1.1	04
1.4 (ZZE150_)	71	4ZZ-FE	03/07 →	**CT5KMR11**		Copper	1.1	04
1.4 16V (ZZE111_)	71	4ZZ-FE	02/00 → 11/01	**CT5KMR11**		Copper	1.1	04
1.4 VVT-i	71	4ZZ-FE	01/07 →	**CT5KMR11**		Copper	1.1	04
1.4 VVT-i (ZZE120_)	71	4ZZ-FE	01/02 → 12/06	**CT5KMR11**		Copper	1.1	04
1.5	81	1NZ-FE	06/07 → 07/07	**CT5KMR11**		Copper	1.1	04
	78	1NZ-FE	09/99 → 10/01	**CT5KMR11**		Copper	1.1	04
1.5 (ZZA120_, ZZE123_)	80	1NZ-FE	11/01 → 07/07	**CT5KMR11**		Copper	1.1	04
1.5 G 4WD	80	1NZ-FE	11/01 → 05/04	**CT5KMR11**		Copper	1.1	04
1.6	76	4A-FE	07/92 → 07/95	**CT5KMR11**		Copper	1.1	04
	85	4A-FE	05/92 → 07/95	**CT5KMR11**		Copper	1.1	04
1.6 (AE101_)	78	4A-F	09/94 → 12/97	**CT5KMR11**		Copper	1.1	04
	78	4A-FE	09/94 → 12/97	**CT5KMR11**		Copper	1.1	04
1.6 (ZZE112_)	81	3ZZ-FE	02/00 → 01/02	**CT5KMR11**		Copper	1.1	04
1.6 16V (ZZE112_)	81	3ZZ-FE	02/00 → 11/01	**CT5KMR11**		Copper	1.1	04
1.6 DX (AE101_)	84	4A-FE	09/95 → 04/97	**CT5KMR11**		Copper	1.1	04
1.6 GLI (AE101_)	84	4A-FE	07/94 → 04/97	**CT5KMR11**		Copper	1.1	04

	kW					CORE		QTY
TOYOTA								
COROLLA								
1.6 i (AE101)	78	4A-FE	09/94 → 11/99	**CT5KMR11**		Copper	1.1	04
1.6 Si (AE101_)	84	4A-FE	09/95 → 04/97	**CT5KMR11**		Copper	1.1	04
1.6 VVT-i (ZZE121_)	81	3ZZ-FE	01/02 → 12/06	**CT5KMR11**		Copper	1.1	04
1.6 XLI S/D (ZZE121_)	81	3ZZ-FE	08/02 → 07/07	**CT5KMR11**		Copper	1.1	04
1.8	92	1ZZ-FE	05/02 → 05/04	**CT5KMR11**		Copper	1.1	04
	96	1ZZ-FE	03/01 → 07/05	**CT5KMR11**		Copper	1.1	04
	100	1ZZ-FE	06/04 → 02/07	**CT5KMR11**		Copper	1.1	04
1.8 4WD	100	1ZZ-FE	12/01 → 02/07	**CT5KMR11**		Copper	1.1	04
1.8 Fielder XEI	100	1ZZ-FE	06/04 → 02/07	**CT5KMR11**		Copper	1.1	04
1.8 SE-G	100	1ZZ-FE	11/01 → 07/07	**CT5KMR11**		Copper	1.1	04
1.8 VVTi	100	1ZZ-FE	06/04 → 02/07	**CT5KMR11**		Copper	1.1	04
COROLLA ALTIS								
1.3 (NZE120_)	64	2NZ-FE	11/01 → 05/04	**CT5KMR11**		Copper	1.1	04
1.3 VVT-i	63	2NZ-FE	03/08 →	**CT5KMR11**		Copper	1.1	04
1.4 VVT-i	71	4ZZ-FE	01/07 →	**CT5KMR11**		Copper	1.1	04
1.4 VVT-i (ZZE120_)	71	4ZZ-FE	08/02 → 07/07	**CT5KMR11**		Copper	1.1	04
1.5	81	1NZ-FE	06/07 → 07/07	**CT5KMR11**		Copper	1.1	04
1.5 (ZZA120_, ZZE123_)	80	1NZ-FE	11/01 → 07/07	**CT5KMR11**		Copper	1.1	04
1.5 G 4WD	80	1NZ-FE	11/01 → 05/04	**CT5KMR11**		Copper	1.1	04
1.6 VVT-i (ZZE121_)	81	3ZZ-FE	08/02 → 07/07	**CT5KMR11**		Copper	1.1	04
1.6 XLI S/D (ZZE121_)	81	3ZZ-FE	08/02 → 07/07	**CT5KMR11**		Copper	1.1	04
1.8	96	1ZZ-FE	03/01 → 07/05	**CT5KMR11**		Copper	1.1	04
	100	1ZZ-FE	11/01 → 07/07	**CT5KMR11**		Copper	1.1	04
	92	1ZZ-FE	05/02 → 05/04	**CT5KMR11**		Copper	1.1	04
1.8 SE-G	100	1ZZ-FE	11/01 → 07/07	**CT5KMR11**		Copper	1.1	04
COROLLA Verso								
1.6 (ZNR10_)	81	3ZZ-FE	04/04 → 03/09	**CT5KMR11**		Copper	1.1	04
1.8 (ZNR11_)	95	1ZZ-FE	09/05 → 03/09	**CT5KMR11**		Copper	1.1	04
1.8 VVT-i (ZZE122_)	99	1ZZ-FE	01/02 → 05/04	**CT5KMR11**		Copper	1.1	04
1.8 VVTi 4WD	99	1ZZ-FE	10/01 →	**CT5KMR11**		Copper	1.1	04
CRESTA								
2.0 VVTi 24V	118	1G-FE	10/96 → 09/01	**CT5KMR11**		Copper	1.1	06
DYNA 300								
2.4	103	2RZ-FE	06/98 → 07/01	**CT5KMR**		Copper	0.8	04

	kW					CORE		QTY
TOYOTA								
FORTUNER								
4.0 4WD (GGN50_, GGN60_)	175	1GR-FE	03/09 → 05/15	**CT6KHMR11**		Copper	1.1	06
4.0 (GGN50_, GGN60_)	175	1GR-FE	07/05 → 05/15	**CT6KHMR11**		Copper	1.1	06
HILUX								
4.0	175	1GR-FE	02/05 → 07/97	**CT6KHMR11**		Copper	1.1	06
4.0 4WD	175	1GR-FE	02/05 → 11/10	**CT6KHMR11**		Copper	1.1	06
HILUX (VIGO) VII								
4.0 4WD	175	1GR-FE	08/05 →	**CT6KHMR11**		Copper	1.1	06
HILUX SURF								
3.0 (VZN130_, VZN131_)	105	3VZ-E	07/90 → 11/95	**CT5KMR**		Copper	0.8	06
HILUX SW4								
4.0 (GGN50_, GGN60_)	175	1GR-FE	07/05 → 05/15	**CT6KHMR11**		Copper	1.1	06
4.0 4WD (GGN50_, GGN60_)	175	1GR-FE	03/09 → 05/15	**CT6KHMR11**		Copper	1.1	06
HILUX VI								
2.4	107	2RZ-FE	08/97 → 07/05	**CT5KMR**		Copper	0.8	04
2.4 i 4WD (RZN14_, RZN16_, RZN19_)	103	2RZ-FE	08/97 → 07/05	**CT5KMR**		Copper	0.8	04
HILUX VII								
4.0 4WD	175	1GR-FE	08/05 →	**CT6KHMR11**		Copper	1.1	06
LAND CRUISER								
2.7 (RZJ12)	112	3RZ-FE	09/02 → 08/04	**CT5KMR11**		Copper	1.1	04
4.0	179	1GR-FE	09/02 → 08/04	**CT6KHMR11**		Copper	1.1	06
4.0 (GRJ125_)	183	1GR-FE	01/03 →	**CT6KHMR11**		Copper	1.1	06
4.0 (GRJ200_)	176	1GR-FE	01/10 →	**CT6KHMR11**		Copper	1.1	06
4.0 4x4	170	1GR-FE	07/92 → 10/97	**CT6KHMR11**		Copper	1.1	06
4.0 V6 WTi (GRJ12)	179	1GR-FE	09/02 → 08/04	**CT6KHMR11**		Copper	1.1	06
LAND CRUISER 150								
4.0 V6 Dual VVTi	205	1GR-FE	01/10 →	**CT6KHMR11**	→ 10/11	Copper	1.1	06
4.0 V6 VVTi	203	1GR-FE	01/10 →	**CT6KHMR11**	→ 10/11	Copper	1.1	06
	183	1GR-FE	01/10 →	**CT6KHMR11**	→ 10/11	Copper	1.1	06
4.0 V6 VVT-i (GRJ150_)	207	1GR-FE	01/10 →	**CT6KHMR11**	→ 10/11	Copper	1.1	06
LAND CRUISER 200								
4.0 (GRJ200_)	176	1GR-FE	01/10 →	**CT6KHMR11**		Copper	1.1	06
LITEACE								
1.8	96	1ZZ-FE	10/97 →	**CT5KMR11**		Copper	1.1	04
MR 2 III								
1.8 16V VT-i (ZZW30)	103	1ZZ-FE	10/99 → 06/07	**CT5KMR11**		Copper	1.1	04

	kW					CORE		QTY
TOYOTA								
MR III								
1.8 16V VT-i (ZZW30)	103	1ZZ-FE	10/99 → 06/07	**CT5KMR11**		Copper	1.1	04
PICKUP								
3.0 (VZN130_, VZN131_)	105	3VZ-E	07/90 → 11/95	**CT5KMR**		Copper	0.8	06
PREVIA								
2.4	97	2TZ-FE	05/90 → 08/00	**CT5KMR**		Copper	0.8	04
2.4 4WD	97	2TZ-FE	05/90 → 08/00	**CT5KMR**		Copper	0.8	04
	110	2TZ-FZE	05/90 → 12/99	**CT5KMR**		Copper	0.8	04
	118	2TZ-FZE	09/93 → 12/97	**CT5KMR**		Copper	0.8	04
2.4 LE/DLX 16V	97	2TZ-FE	05/90 → 08/00	**CT5KMR**		Copper	0.8	04
RAV 4 II								
1.8 VVTi (ZCA25_, ZCA26_)	92	1ZZ-FE	08/00 → 11/05	**CT5KMR11**		Copper	1.1	04
RAV 4 Mk II								
1.8 VVTi (ZCA25_, ZCA26_)	92	1ZZ-FE	08/00 → 11/05	**CT5KMR11**		Copper	1.1	04
SW4								
4.0 4WD (GGN50_, GGN60_)	175	1GR-FE	03/09 → 05/15	**CT6KHMR11**		Copper	1.1	06
4.0 (GGN50_, GGN60_)	175	1GR-FE	07/05 → 05/15	**CT6KHMR11**		Copper	1.1	06
URBAN CRUISER								
1.5 VVTi (NCP110_)	80	1NZ-FE	07/07 →	**CT5KMR11**		Copper	1.1	04
1.5 VVTi 4WD (NCP115_)	76	1NZ-FE	04/09 →	**CT5KMR11**		Copper	1.1	04
YARIS								
1.0 (SCP10_)	50	1SZ-FE	04/99 → 09/05	**CT5KMR**	→ 12/02	Copper	0.8	04
1.0 (SCP11_)	50	1SZ-FE	04/99 → 08/05	**CT5KMR**		Copper	0.8	04
1.3 (NCP10_, SCP12_)	63	2NZ-FE	11/99 → 09/05	**CT5KMR11**		Copper	1.1	04
	63	2SZ-FE	11/99 → 09/05	**CT5KMR11**		Copper	1.1	04
1.3 (NCP130_)	63	2NZ-FE	12/10 →	**CT5KMR11**		Copper	1.1	04
1.3 (NCP16_)	63	2NZ-FE	08/99 → 08/05	**CT5KMR11**		Copper	1.1	04
1.3 (NCP92_)	64	2SZ-FE	08/07 →	**CT5KMR11**		Copper	1.1	04
	64	2NZ-FE	08/07 →	**CT5KMR11**		Copper	1.1	04
1.3 (SCP12_)	64	2SZ-FE	04/02 → 09/05	**CT5KMR11**		Copper	1.1	04
1.3 4WD (NCP16_)	63	2NZ-FE	08/99 →	**CT5KMR11**		Copper	1.1	04
1.3 4WD (NCP92_)	64	2SZ-FE	08/07 →	**CT5KMR11**		Copper	1.1	04
	64	2NZ-FE	08/07 →	**CT5KMR11**		Copper	1.1	04
1.3 VVT-i (NCP90_, SCP90_)	63	2SZ-FE	11/05 →	**CT5KMR11**		Copper	1.1	04
	63	2NZ-FE	11/05 →	**CT5KMR11**		Copper	1.1	04
	64	2SZ-FE	08/05 →	**CT5KMR11**		Copper	1.1	04
	64	2NZ-FE	08/05 →	**CT5KMR11**		Copper	1.1	04

	kW					CORE		QTY
TOYOTA								
YARIS								
1.5 (NCP12_)	78	1NZ-FE	04/99 → 08/05	**CT5KMR11**		Copper	1.1	04
1.5 (NCP13_)	77	1NZ-FE	01/03 → 09/05	**CT5KMR11**		Copper	1.1	04
	110	1NZ-FE	03/03 → 07/05	**CT5KMR11**		Copper	1.1	04
	78	1NZ-FE	04/01 → 09/05	**CT5KMR11**		Copper	1.1	04
1.5 (NCP91_)	80	1NZ-FE	11/05 →	**CT5KMR11**		Copper	1.1	04
1.5 (NCP93)	80	1NZ-FE	08/07 →	**CT5KMR11**		Copper	1.1	04
1.5 (NCP93_)	81	1NZ-FE	08/07 →	**CT5KMR11**		Copper	1.1	04
1.5 4WD (NCP13_)	78	1NZ-FE	09/02 → 08/05	**CT5KMR11**		Copper	1.1	04
1.8 VVTi	97	1ZZ-FE	11/05 → 12/10	**CT5KMR11**		Copper	1.1	04
YARIS VERSO								
1.3 (NCP20_, NCP22_)	62	2NZ-FE	11/02 → 09/05	**CT5KMR11**		Copper	1.1	04
	63	2NZ-FE	08/99 → 10/02	**CT5KMR11**		Copper	1.1	04
1.5 (NCP21_)	78	1NZ-FE	03/00 → 09/05	**CT5KMR11**		Copper	1.1	04
	77	1NZ-FE	05/03 → 09/05	**CT5KMR11**		Copper	1.1	04
1.5 4WD (NCP21_)	78	1NZ-FE	03/00 → 09/05	**CT5KMR11**		Copper	1.1	04
VAUXHALL								
AGILA Mk I (A)								
1.0 12V	43	Z 10 XE	09/00 → 08/05	**D6KMR**		Copper	0.9	03
	44	Z 10 XEP	02/00 → 11/06	**D6KMR**		Copper	0.9	03
1.2 16V	55	Z 12 XE	09/00 → 03/08	**D6KMR**		Copper	0.9	04
1.2 16V Twinport	59	Z 12 XEP	07/04 → 11/06	**A5KMR**		Copper	1.1	04
ANTARA								
2.4	103	Z 24 XED	08/06 →	**D6KMR**		Copper	0.9	04
ASTRA Mk II								
1.4 i	44	C 14 NZ	01/90 → 08/91	**CW7LPR**		Nickel	0.8	04
	44	C 14 NZ	01/90 → 08/91	**CT6FMR**		Copper	0.8	04
1.4 S	55	14 NV	01/90 → 08/91	**CW7LPR**		Nickel	0.8	04
	55	14 NV	01/90 → 08/91	**CT6FMR**		Copper	0.8	04
1.6 i	60	16 SV	01/87 → 12/91	**CT6FMR**		Copper	0.8	04
1.6 S	60	16 SV	01/89 → 12/91	**CT6FMR**		Copper	0.8	04
1.8 i	83	18 E	01/90 → 08/91	**CT6FMR**		Copper	0.8	04
2.0 GTE 16V	115	20 XE	05/88 → 08/91	**7LPR**		Nickel	0.8	04
	115	20 XE	05/88 → 08/91	**CT6KMR**		Copper	0.8	04
ASTRA Mk III (F)								
1.4 i	44	C 14 NZ	04/92 → 09/98	**D6KMR**		Copper	0.9	04
	60	C 14 SE	04/92 → 09/98	**D6KMR**		Copper	0.9	04
1.4 i 16V	66	X 14 XE	02/96 → 09/98	**D6KMR**		Copper	0.9	04
1.4 S	55	14 NV	09/91 → 02/98	**D6KMR**		Copper	0.9	04
1.6	74	C 16 SE	03/94 → 08/95	**D6KMR**		Copper	0.9	04

	kW					CORE		QTY
VAUXHALL								
ASTRA Mk III (F)								
1.6 i	55	E 16 NZ	09/91 → 02/98	**D6KMR**		Copper	0.9	04
	52	X 16 SZ	08/94 → 07/96	**D6KMR**		Copper	0.9	04
	55	C 16 NZ	03/92 → 09/98	**D6KMR**		Copper	0.9	04
	55	X 16 SZR	03/92 → 09/98	**D6KMR**		Copper	0.9	04
	74	C 16 SE	05/92 → 12/94	**D6KMR**		Copper	0.9	04
1.6 i 16V	74	X 16 XEL	08/94 → 09/98	**D6KMR**		Copper	0.9	04
1.8	92	C 18 XE	09/94 → 08/96	**D6KMR**		Copper	0.9	04
1.8 16V	85	X 18 XE	11/94 → 03/01	**D6KMR**		Copper	0.9	04
1.8 i	66	C 18 NZ	03/92 → 09/98	**D6KMR**		Copper	0.9	04
1.8 i 16V	85	X 18 XE	09/94 → 02/98	**D6KMR**		Copper	0.9	04
	82	18 SE	09/95 → 02/98	**D6KMR**		Copper	0.9	04
	85	C 18 XEL	01/94 → 12/96	**D6KMR**		Copper	0.9	04
	92	C 18 XE	06/93 → 10/94	**D6KMR**		Copper	0.9	04
2.0 i	85	C 20 NE	03/92 → 09/98	**D6KMR**		Copper	0.9	04
2.0 i 16V	110	C 20 XE	09/91 → 02/98	**D6KMR**		Copper	0.9	04
	100	X 20 XEV	02/95 → 09/98	**D6KMR**		Copper	0.9	04
ASTRA Mk IV (G)								
1.2 16V	48	X 12 XE	02/98 → 09/00	**D6KMR**		Copper	0.9	04
	55	Z 12 XE	09/00 → 05/05	**D6KMR**		Copper	0.9	04
1.4 16V	66	X 14 XE	02/98 → 05/05	**D6KMR**		Copper	0.9	04
	66	Z 14 XE	02/98 → 05/05	**D6KMR**		Copper	0.9	04
	66	Z 14 XE	02/98 → 05/05	**A5KMR**		Copper	1.1	04
	66	X 14 XE	02/98 → 05/05	**A5KMR**		Copper	1.1	04
1.6	55	X 16 SZR	02/98 → 09/00	**D6KMR**		Copper	0.9	04
	62	Z 16 SE	09/00 → 05/05	**D6KMR**		Copper	0.9	04
	76	Z 16 XEP	12/02 → 05/05	**D6KMR**		Copper	0.9	04
	76	Z 16 XEP	12/02 → 05/05	**A5KMR**		Copper	1.1	04
1.6 16V	74	Z 16 XE	02/98 → 05/05	**D6KMR**		Copper	0.9	04
	74	X 16 XEL	02/98 → 05/05	**D6KMR**		Copper	0.9	04
	74	C 16 SEL	09/98 → 05/05	**D6KMR**		Copper	0.9	04
	74	Z 16 XEP	09/98 → 05/05	**D6KMR**		Copper	0.9	04
	76	Z 16 XEP	03/00 → 08/05	**D6KMR**		Copper	0.9	04
	76	Z 16 XEP	03/00 → 08/05	**A5KMR**		Copper	1.1	04
1.6 Dualfuel	62	Z 16 SE	07/00 → 05/05	**D6KMR**		Copper	0.9	04
	63	Z 16 XE	09/02 → 05/05	**D6KMR**		Copper	0.9	04
1.8 16V	85	X 18 XE1	02/98 → 09/00	**D6KMR**		Copper	0.9	04
	85	Z 18 XEL	03/00 → 08/05	**D6KMR**		Copper	0.9	04
	92	Z 18 XE	09/00 → 05/05	**D6KMR**		Copper	0.9	04
1.8 16V Dualfuel	87	Z 18 XE	09/02 → 05/05	**D6KMR**		Copper	0.9	04
2.0	118	X 20 XER	10/99 → 08/00	**D6KMR**		Copper	0.9	04
	147	Z 20 LET	09/02 → 10/05	**D6KMR**		Copper	0.9	04
2.0 16V	100	X 20 XEV	02/98 → 05/05	**D6KMR**		Copper	0.9	04
	118	X 20 XER	10/99 → 05/05	**D6KMR**		Copper	0.9	04
2.0 16V Turbo	140	Z 20 LET	09/00 → 08/05	**D6KMR**		Copper	0.9	04

	kW					CORE		QTY
VAUXHALL								
ASTRA Mk IV (G)								
2.0 SRI Turbo	141	Z 20 LET	11/01 → 05/05	**D6KMR**		Copper	0.9	04
2.0 Turbo	141	Z 20 LET	03/02 → 10/05	**D6KMR**		Copper	0.9	04
ASTRA Mk V (H)								
1.4	66	Z 14 XEP	01/04 → 05/09	**A5KMR**		Copper	1.1	04
1.4 i 16V	66	Z 14 XEP	03/05 → 11/10	**A5KMR**		Copper	1.1	04
1.6	77	Z 16 XEP	01/04 → 05/09	**D6KMR**		Copper	0.9	04
	77	Z 16 XEP	01/04 → 05/09	**A5KMR**		Copper	1.1	04
	85	Z 16 XER	01/04 → 05/09	**A5KMR**		Copper	1.1	04
	85	A 16 XER	08/04 → 03/09	**A5KMR**		Copper	1.1	04
	132	Z 16 LET	10/06 → 11/10	**A5KMR**		Copper	1.1	04
1.6 i 16V	85	Z 16 XER	12/07 → 11/10	**A5KMR**		Copper	1.1	04
1.8	103	A 18 XER	01/04 → 05/09	**A5KMR**		Copper	1.1	04
	92	Z 18 XE	01/04 → 05/09	**A5KMR**		Copper	1.1	04
1.8 i 16V	103	A 18 XER	03/07 → 11/10	**A5KMR**		Copper	1.1	04
	103	Z 18 XER	03/07 → 11/10	**A5KMR**		Copper	1.1	04
2.0 Turbo	125	Z 20 LEL	01/04 → 05/09	**A5KMR**		Copper	1.1	04
	147	Z 20 LER	01/04 → 05/09	**A5KMR**		Copper	1.1	04
ASTRA TwinTop Mk V (H)								
1.6	132	Z 16 LET	10/06 → 11/10	**A5KMR**		Copper	1.1	04
1.6 i 16V	85	Z 16 XER	10/06 → 11/10	**A5KMR**		Copper	1.1	04
1.8	103	Z 18 XER	05/08 → 11/10	**A5KMR**		Copper	1.1	04
2.0	125	Z 20 LEL	02/06 → 11/10	**A5KMR**		Copper	1.1	04
2.0 Turbo	147	Z 20 LER	01/06 → 11/10	**A5KMR**		Copper	1.1	04
ASTRAVAN Mk III (F)								
1.4 i	44	C 14 NZ	01/91 → 10/94	**D6KMR**		Copper	0.9	04
	44	C 14 NZ	01/91 → 10/94	**CT6FMR**		Copper	0.8	04
1.6 i	52	X 16 SZ	02/94 → 10/96	**D6KMR**		Copper	0.9	04
	52	X 16 SZ	02/94 → 10/96	**CT6FMR**		Copper	0.8	04
	55	C 16 NZ	01/91 → 08/98	**D6KMR**		Copper	0.9	04
	55	C 16 NZ	01/91 → 08/98	**CT6FMR**		Copper	0.8	04
ASTRAVAN Mk IV (G)								
1.6 i	55	X 16 SZR	08/98 → 09/00	**D6KMR**		Copper	0.9	04
	55	X 16 SZR	08/98 → 09/00	**A5KMR**		Copper	1.1	04
	62	Z 16 SE	09/00 → 08/06	**D6KMR**		Copper	0.9	04
	62	Z 16 SE	09/00 → 08/06	**A5KMR**		Copper	1.1	04
ASTRAVAN Mk V (H)								
1.4 i	66	Z 14 XEP	03/05 →	**A5KMR**		Copper	1.1	04
BRAVA Pick-up								
2.3 (TFR16)	69	4 ZD1	08/91 → 08/94	**CW7LPR**		Nickel	0.8	04
	69	4 ZD1	08/91 → 08/94	**CT6FMR**		Copper	0.8	04
	72	23 P	08/94 → 09/96	**CW7LPR**		Nickel	0.8	04
	72	23 P	08/94 → 09/96	**CT6FMR**		Copper	0.8	04

	kW					CORE		QTY
VAUXHALL								
BRAVA Pick-up								
2.3 4x4 (TFS16)	69	4 ZD1	06/90 → 08/94	**CW7LPR**		Nickel	0.8	04
	69	4 ZD1	06/90 → 08/94	**CT6FMR**		Copper	0.8	04
	72	23 P	08/94 → 09/96	**CW7LPR**		Nickel	0.8	04
	72	23 P	08/94 → 09/96	**CT6FMR**		Copper	0.8	04
CALIBRA								
2.0 i	85	C 20 NE	06/90 → 07/97	**D6KMR**	07/93 →	Copper	0.9	04
	85	C 20 NE	06/90 → 07/97	**CT5FMR**	07/93 →	Copper	0.8	04
2.0 i 16V	100	X 20 XEV	06/90 → 07/97	**D6KMR**		Copper	0.9	04
	110	C 20 XE	06/90 → 02/94	**D6KMR**		Copper	0.9	04
2.0 i 16V 4x4	100	X 20 XEV	02/94 → 07/97	**D6KMR**		Copper	0.9	04
	110	C 20 XE	06/90 → 02/94	**D6KMR**		Copper	0.9	04
2.0 i 4x4	85	C 20 NE	06/90 → 07/97	**D6KMR**	07/93 →	Copper	0.9	04
	85	C 20 NE	06/90 → 07/97	**CT5FMR**	07/93 →	Copper	0.8	04
2.5 i V6	125	C 25 XE	04/93 → 07/97	**D6KMR**		Copper	0.9	06
	125	X 25 XE	04/93 → 07/97	**D6KMR**		Copper	0.9	06
CARLTON Mk III								
1.8	65	E 18 NVR	09/87 → 03/94	**CW7LPR**		Nickel	0.8	04
	65	E 18 NVR	09/87 → 03/94	**CT6FMR**		Copper	0.8	04
2.0	73	C 20 NEJ	09/90 → 03/94	**D6KMR**		Copper	0.9	04
	74	C 20 NEF	09/90 → 03/94	**CT5FMR**		Copper	0.8	04
2.4 i	92	C 24 NE	09/88 → 03/94	**D6KMR**		Copper	0.9	04
2.6 i	110	C 26 NE	09/90 → 03/94	**CW6NP**		Nickel	0.8	06
	110	C 26 NE	09/90 → 03/94	**CW6NP**		Copper	0.8	06
3.0 3000	130	30 NE	03/87 → 09/90	**CW6NP**		Nickel	0.8	06
	130	30 NE	03/87 → 09/90	**CW6NP**		Copper	0.8	06
3.0 3000 24V	150	C 30 SE	09/89 → 03/94	**D6KMR**		Copper	0.9	06
3000	115	C 30 LE	03/87 → 12/87	**D6KMR**		Copper	0.9	06
3000 24V	147	C 30 SEJ	09/89 → 03/94	**D6KMR**		Copper	0.9	06
3000 Cat	130	C 30 NE	03/88 → 03/94	**D6KMR**		Copper	0.9	06
CAVALIER Mk II								
2.0 SRi 130	95	20 SEH	03/87 → 08/88	**CW7LPR**		Nickel	0.8	04
2.0 SRi 130	95	20 SEH	03/87 → 08/88	**CT6FMR**		Copper	0.8	04
CAVALIER Mk III								
1.4 S	55	14 NV	09/88 → 11/95	**CW7LPR**		Nickel	0.8	04
	55	14 NV	09/88 → 11/95	**CT6FMR**		Copper	0.8	04
1.6	60	16 SV	09/88 → 05/93	**CW7LPR**		Nickel	0.8	04
	60	16 SV	09/88 → 05/93	**CT6FMR**		Copper	0.8	04
1.8	66	18 SV	09/88 → 08/95	**CW7LPR**		Nickel	0.8	04
	66	C 18 NZ	09/88 → 08/95	**CW7LPR**		Nickel	0.8	04
	66	18 SV	09/88 → 08/95	**CT6FMR**		Copper	0.8	04
	66	C 18 NZ	09/88 → 08/95	**CT6FMR**		Copper	0.8	04
1.8 i Cat	66	C 18 NZ	03/90 → 11/95	**CT5FMR**		Copper	0.8	04
2.0 i 16V	110	C 20 XE	09/88 → 11/95	**D6KMR**		Copper	0.9	04
2.0 i 16V 4x4	110	C 20 XE	09/88 → 11/95	**D6KMR**		Copper	0.9	04

	kW					CORE		QTY
VAUXHALL								
CAVALIER Mk III								
2.0 i 4x4	95	20 SEH	09/88 → 09/92	**CW7LPR**		Nickel	0.8	04
	85	20 NE	01/91 → 10/92	**CT5FMR**		Copper	0.8	04
	95	20 SEH	09/88 → 09/92	**CT6FMR**		Copper	0.8	04
2.0 i Cat	85	C 20 NE	09/90 → 11/95	**D6KMR**		Copper	0.9	04
2.0 SRi	95	20 SEH	09/88 → 09/92	**CW7LPR**		Nickel	0.8	04
	95	20 SEH	09/88 → 09/92	**CT6FMR**		Copper	0.8	04
2.0 SRi 16V	100	X 20 XEV	09/93 → 11/95	**D6KMR**		Copper	0.9	04
2.5 V6	125	C 25 XE	08/88 → 06/94	**D6KMR**		Copper	0.9	06
COMBO Mk I (B)								
1.4	44	C 14 NZ	07/94 → 10/01	**D6KMR**		Copper	0.9	04
	60	C 14 SE	07/94 → 10/01	**D6KMR**		Copper	0.9	04
COMBO Mk II (C)								
1.4 16V	66	Z 14 XE	10/01 → 05/07	**A5KMR**		Copper	1.1	04
1.4 i 16V	66	Z 14 XEP	01/04 → 11/11	**A5KMR**		Copper	1.1	04
1.6	62	Z 16 SE	09/01 → 10/04	**D6KMR**		Copper	0.9	04
	64	Z 16 SE	10/01 → 11/11	**D6KMR**		Copper	0.9	04
CORSA Mk I (B)								
1.0 i 12V	40	X 10 XE	11/96 → 09/00	**D6KMR**		Copper	0.9	03
1.2 i	33	X 12 SZ	03/93 → 09/00	**D6KMR**		Copper	0.9	04
	33	C 12 NZ	03/93 → 09/00	**D6KMR**		Copper	0.9	04
	33	C 12 NZ	03/93 → 09/00	**CT5FMR**		Copper	0.8	04
	33	X 12 SZ	03/93 → 09/00	**CT5FMR**		Copper	0.8	04
1.2 i 16V	48	X 12 XE	03/98 → 09/00	**D6KMR**		Copper	0.9	04
1.4 i	44	X 14 SZ	03/93 → 09/00	**D6KMR**	08/95 →	Copper	0.9	04
	44	C 14 NZ	03/93 → 09/00	**D6KMR**	08/95 →	Copper	0.9	04
	44	C 14 NZ	03/93 → 09/00	**CT5FMR**	08/95 →	Copper	0.8	04
	44	X 14 SZ	03/93 → 09/00	**CT5FMR**	08/95 →	Copper	0.8	04
1.4 i 16V	66	X 14 XE	09/94 → 09/00	**D6KMR**		Copper	0.9	04
1.6 i 16V	78	C 16 XE	09/94 → 09/00	**D6KMR**		Copper	0.9	04
	78	X 16 XE	09/94 → 09/00	**D6KMR**		Copper	0.9	04
CORSA Mk II (C)								
1.0 12V	43	Z 10 XE	09/00 → 10/03	**D6KMR**		Copper	0.9	03
	44	Z 10 XEP	11/03 → 10/06	**A5KMR**		Copper	1.1	03
1.2 16V	55	Z 12 XE	09/00 → 10/06	**D6KMR**		Copper	0.9	04
1.2 16V Dualfuel	55	Z 12 XE	08/10 → 10/06	**D6KMR**		Copper	0.9	04
1.2 Twinport	59	Z 12 XEP	07/04 → 10/06	**A5KMR**		Copper	1.1	04
1.4 16V	66	Z 14 XE	09/00 → 10/06	**D6KMR**		Copper	0.9	04
1.4 Twinport	66	Z 14 XEP	06/03 → 10/06	**A5KMR**		Copper	1.1	04
1.8 16V	92	Z 18 XE	08/00 → 09/06	**D6KMR**		Copper	0.9	04
CORSA Mk III (D)								
1.0 i 12V	48	A 10 XEP	06/10 →	**A5KMR**		Copper	1.1	03
1.2	59	Z 12 XEP	11/06 →	**A5KMR**		Copper	1.1	04
1.4	66	Z 14 XEP	07/06 →	**A5KMR**		Copper	1.1	04

	kW					CORE		QTY
VAUXHALL								
CORSAVAN Mk I (B)								
1.4 i	44	C 14 NZ	01/94 → 09/00	**D6KMR**	08/95 →	Copper	0.9	04
	44	C 14 NZ	01/94 → 09/00	**CT5FMR**	08/95 →	Copper	0.8	04
CORSAVAN Mk II (C)								
1.2 16V	55	Z 12 XE	09/00 → 06/06	**D6KMR**		Copper	0.9	04
1.4	66	Z 14 XEP	11/03 → 06/06	**A5KMR**		Copper	1.1	04
CORSAVAN Mk III (D)								
1.2	59	Z 12 XEP	07/09 →	**A5KMR**		Copper	1.1	04
FRONTERA Mk I (A)								
2.0	85	X 20 SE	04/95 → 08/98	**D6KMR**		Copper	0.9	04
	85	C 20 NE	04/95 → 08/98	**D6KMR**		Copper	0.9	04
2.2 i	100	X 22 XE	03/95 → 10/98	**D6KMR**		Copper	0.9	04
2.4 i	92	C 24 NE	03/92 → 10/98	**CW6NP**		Nickel	0.8	04
	92	C 24 NE	03/92 → 10/98	**CW6NP**		Copper	0.8	04
FRONTERA Mk II (B)								
2.2 i	100	Y 22 SE	10/98 → 10/04	**CT5KMMR11**		Copper	1.1	04
	100	X 22 SE	10/98 → 10/04	**CT5KMMR11**		Copper	1.1	04
INSIGNIA								
1.6	85	A 16 XER	07/08 →	**A5KMR**		Copper	1.1	04
MERIVA Mk I (A)								
1.4 16V Twinport	66	Z 14 XEP	01/03 → 10/09	**A5KMR**		Copper	1.1	04
1.6 i	64	Z 16 SE	01/03 → 06/10	**D6KMR**		Copper	0.9	04
1.6 i 16V	74	Z 16 XE	01/03 → 09/05	**D6KMR**		Copper	0.9	04
1.6 i 16V Twinport	77	Z 16 XEP	05/03 → 06/10	**A5KMR**		Copper	1.1	04
1.8 i 16V	92	Z 18 XE	05/03 → 08/05	**D6KMR**		Copper	0.9	04
MIDI II								
2.0	62	4ZC1	06/88 → 08/97	**CW7LPR**	01/93 →	Nickel	0.8	04
MIDI II Autobus								
2.0	62	4ZC1	06/88 → 08/97	**CT6FMR**	01/93 →	Copper	0.8	04
MOKKA								
1.6	85	B 16 XER	06/12 →	**A5KMR**		Copper	1.1	04
	85	A 16 XER	06/12 →	**A5KMR**		Copper	1.1	04
MONTEREY								
3.2	130	6 VD1	06/92 → 07/98	**CT6KMR11**	05/94 →	Copper	1.1	06
NOVA								
1.4	44	C 14 NZ	10/90 → 08/92	**CW7LPR**		Nickel	0.8	04
	44	C 14 NZ	10/90 → 08/92	**CT6FMR**		Copper	0.8	04
1.4 S	55	14 NV	01/90 → 02/93	**CW7LPR**		Nickel	0.8	04
	55	14 NV	01/90 → 02/93	**CT6FMR**		Copper	0.8	04
NOVAVAN								
1.2	38	12 NV	01/90 → 10/94	**CW7LPR**	→ 03/93	Nickel	0.8	04

	kW					CORE		QTY
VAUXHALL								
OMEGA (B)								
2.0	85	20 SE	09/95 → 09/96	**D6KMR**		Copper	0.9	04
	85	X 20 SE	03/94 → 09/99	**D6KMR**		Copper	0.9	04
2.0 16V	100	X 20 XEV	03/94 → 09/99	**D6KMR**		Copper	0.9	04
	106	Y 22 XE	01/94 → 06/03	**D6KMR**		Copper	0.9	04
	106	Z 22 XE	01/94 → 06/03	**D6KMR**		Copper	0.9	04
SENATOR Mk II (B)								
2.5 i	103	25 E	09/87 → 10/90	**CW6NP**		Nickel	0.8	06
	103	25 E	09/87 → 10/90	**CW6NP**		Copper	0.8	06
2.6 i	110	C 26 NE	09/90 → 09/93	**CW6NP**		Nickel	0.8	06
	110	C 26 NE	09/90 → 09/93	**CW6NP**		Copper	0.8	06
3.0	130	30 NE	01/88 → 09/90	**CW6NP**		Nickel	0.8	06
	130	30 NE	01/88 → 09/90	**CW6NP**		Copper	0.8	06
3.0 24V	150	C 30 SE	09/89 → 09/93	**D6KMR**		Copper	0.9	06
3.0 i Cat	130	C 30 NE	01/88 → 09/93	**CW6NP**	→ 08/92	Nickel	0.8	06
	130	C 30 NE	01/88 → 09/93	**CW6NP**	→ 08/92	Copper	0.8	06
SIGNUM								
1.8	90	Z 18 XE	06/03 → 07/05	**D6KMR**		Copper	0.9	04
	90	Z 18 XE	06/03 → 07/05	**A5KMR**		Copper	1.1	04
	103	Z 18 XER	08/05 → 05/08	**A5KMR**		Copper	1.1	04
SINTRA								
2.2 i 16 V	104	X 22 XE	11/96 → 04/99	**D6KMR**		Copper	0.9	04
3.0 i 24V	148	X 30 XE	11/96 → 04/99	**D6KMR**		Copper	0.9	06
TIGRA Mk I (F07)								
1.4 16V	66	X 14 XE	07/94 → 12/00	**D6KMR**		Copper	0.9	04
1.6 16V	78	X 16 XE	07/94 → 12/00	**D6KMR**		Copper	0.9	04
TIGRA TwinTop								
1.4	66	Z 14 XEP	06/04 → 08/09	**A5KMR**		Copper	1.1	04
1.8	92	Z 18 XE	06/04 → 08/09	**A5KMR**		Copper	1.1	04
VECTRA (B)								
1.6 i	55	X 16 SZR	08/95 → 10/01	**D6KMR**		Copper	0.9	04
1.6 i 16V	74	X 16 XEL	08/95 → 10/01	**D6KMR**		Copper	0.9	04
	74	Y 16 XE	08/95 → 10/01	**D6KMR**		Copper	0.9	04
	74	Z 16 XE	08/95 → 10/01	**D6KMR**		Copper	0.9	04
1.8 i 16V	85	X 18 XE	10/95 → 09/00	**D6KMR**		Copper	0.9	04
	92	Z 18 XE	09/00 → 03/02	**D6KMR**		Copper	0.9	04
2.0 i 16V	100	X 20 XEV	10/95 → 01/01	**D6KMR**		Copper	0.9	04
2.5 i GSi	143	X 25 XE	03/98 → 07/00	**D6KMR**		Copper	0.9	06
2.5 i V6	125	X 25 XE	09/95 → 08/00	**D6KMR**		Copper	0.9	06
2.6 i V6	125	Y 26 SE	09/00 → 03/02	**D6KMR**		Copper	0.9	06
VECTRA Mk II (C)								
1.8	103	Z 18 XER	01/06 → 07/08	**A5KMR**		Copper	1.1	04
1.8 16V	90	Z 18 XE	04/02 → 07/08	**A5KMR**	10/05 →	Copper	1.1	04

	kW					CORE		QTY
VAUXHALL								
ZAFIRA Mk I (A)								
1.6 16V	74	X 16 XEL	04/99 → 08/05	**D6KMR**		Copper	0.9	04
	74	Z 16 XE	04/99 → 08/05	**D6KMR**		Copper	0.9	04
1.8 16V	85	X 18 XE1	05/99 → 08/00	**D6KMR**		Copper	0.9	04
	92	Z 18 XE	09/00 → 08/05	**D6KMR**		Copper	0.9	04
1.8 Dualfuel	92	Z 18 XE	09/00 → 08/05	**D6KMR**		Copper	0.9	04
2.0	147	Z 20 LET	06/02 → 06/05	**D6KMR**		Copper	0.9	04
2.0 GSI Turbo	141	Z 20 LET	09/01 → 06/05	**D6KMR**		Copper	0.9	04
ZAFIRA Mk II (B)								
1.6	77	Z 16 XE1	07/05 →	**A5KMR**	→ 02/09	Copper	1.1	04
	77	Z 16 XEP	07/05 →	**A5KMR**	→ 02/09	Copper	1.1	04
	85	Z 16 XER	12/07 →	**A5KMR**		Copper	1.1	04
	85	A 16 XER	12/07 →	**A5KMR**		Copper	1.1	04
1.8	103	Z 18 XER	04/05 →	**A5KMR**		Copper	1.1	04
	103	A 18 XER	04/05 →	**A5KMR**		Copper	1.1	04
2.0	147	Z 20 LER	07/05 →	**A5KMR**		Copper	1.1	04
ZAFIRA Mk III								
1.8	85	A 18 XEL	10/11 →	**A5KMR**		Copper	1.1	04
	88	A 18 XEL	10/11 →	**A5KMR**		Copper	1.1	04
VOLKSWAGEN								
BEETLE								
1.6	74	AWH	10/99 → 09/00	**YJT6KMR**		Copper	1.0	04
	75	AYD	06/00 → 09/10	**YJT6KMR**	→ 05/01	Copper	1.0	04
	75	BFS	06/00 → 09/10	**YJT6KMR**	→ 05/01	Copper	1.0	04
2.0	85	BDC	09/02 → 10/10	**YJT6KMR**		Copper	1.0	04
	85	BGD	09/02 → 10/10	**YJT6KMR**		Copper	1.0	04
	85	BDC	09/02 → 10/10	**A5KMR**		Copper	1.1	04
	85	BGD	09/02 → 10/10	**A5KMR**		Copper	1.1	04
	85	AQY	01/98 → 09/10	**YJT6KMR**		Copper	1.0	04
	85	APK	01/98 → 09/10	**YJT6KMR**		Copper	1.0	04
	85	AEG	01/98 → 09/10	**YJT6KMR**		Copper	1.0	04
	85	CBPA	01/98 → 09/10	**YJT6KMR**		Copper	1.0	04
	85	BHP	01/98 → 09/10	**YJT6KMR**		Copper	1.0	04
	85	BEJ	01/98 → 09/10	**YJT6KMR**		Copper	1.0	04
	85	BER	01/98 → 09/10	**YJT6KMR**		Copper	1.0	04
	85	AZJ	01/98 → 09/10	**YJT6KMR**		Copper	1.0	04
	85	AVH	01/98 → 09/10	**YJT6KMR**		Copper	1.0	04
	85	BEV	01/98 → 09/10	**YJT6KMR**		Copper	1.0	04
	85	AZG	01/98 → 09/10	**YJT6KMR**		Copper	1.0	04
	85	AQY	01/98 → 09/10	**A5KMR**		Copper	1.1	04
	85	APK	01/98 → 09/10	**A5KMR**		Copper	1.1	04
	85	AEG	01/98 → 09/10	**A5KMR**		Copper	1.1	04
	85	CBPA	01/98 → 09/10	**A5KMR**		Copper	1.1	04
	85	BHP	01/98 → 09/10	**A5KMR**		Copper	1.1	04

	kW					CORE		QTY
VOLKSWAGEN								
BEETLE								
2.0	85	BEJ	01/98 → 09/10	**A5KMR**		Copper	1.1	04
	85	BER	01/98 → 09/10	**A5KMR**		Copper	1.1	04
	85	AZJ	01/98 → 09/10	**A5KMR**		Copper	1.1	04
	85	AVH	01/98 → 09/10	**A5KMR**		Copper	1.1	04
	85	BEV	01/98 → 09/10	**A5KMR**		Copper	1.1	04
	85	AZG	01/98 → 09/10	**A5KMR**		Copper	1.1	04
BORA								
1.4 16V	55	BCA	03/00 → 05/05	**YJT6KMR**		Copper	1.0	04
	55	APE	03/00 → 05/05	**YJT6KMR**		Copper	1.0	04
	55	AXP	03/00 → 05/05	**YJT6KMR**		Copper	1.0	04
	55	AHW	03/00 → 05/05	**YJT6KMR**		Copper	1.0	04
	55	AKQ	03/00 → 05/05	**YJT6KMR**		Copper	1.0	04
1.6	74	APF	10/98 → 05/05	**YJT6KMR**		Copper	1.0	04
	74	AKL	10/98 → 05/05	**YJT6KMR**		Copper	1.0	04
	74	AEH	10/98 → 05/05	**YJT6KMR**		Copper	1.0	04
	75	AVU	08/00 → 05/05	**YJT6KMR**		Copper	1.0	04
	75	BJH	08/00 → 05/05	**YJT6KMR**		Copper	1.0	04
	75	BFQ	08/00 → 05/05	**YJT6KMR**		Copper	1.0	04
1.6 16V	77	AUS	05/00 → 05/05	**YJT6KMR**		Copper	1.0	04
	77	ATN	05/00 → 05/05	**YJT6KMR**		Copper	1.0	04
	77	AZD	05/00 → 05/05	**YJT6KMR**		Copper	1.0	04
	77	BCB	05/00 → 05/05	**YJT6KMR**		Copper	1.0	04
1.6 FSI	81	BAD	01/02 → 05/05	**YJT6KMR**		Copper	1.0	04
1.8	92	AGN	10/98 → 05/05	**YJT6KMR**		Copper	1.0	04
	92	BAF	10/98 → 05/05	**YJT6KMR**		Copper	1.0	04
1.8 4motion	92	AGN	02/99 → 05/05	**YJT6KMR**		Copper	1.0	04
2.0	85	BBW	10/98 → 05/05	**YJT6KMR**		Copper	1.0	04
	85	AQY	10/98 → 05/05	**YJT6KMR**		Copper	1.0	04
	85	AZG	10/98 → 05/05	**YJT6KMR**		Copper	1.0	04
	85	AZJ	10/98 → 05/05	**YJT6KMR**		Copper	1.0	04
	85	APK	10/98 → 05/05	**YJT6KMR**		Copper	1.0	04
	85	AZH	10/98 → 05/05	**YJT6KMR**		Copper	1.0	04
2.0 4motion	85	AZJ	04/00 → 05/05	**YJT6KMR**		Copper	1.0	04
	85	AZH	04/00 → 05/05	**YJT6KMR**		Copper	1.0	04
2.3 V5	110	AGZ	10/98 → 10/00	**D6KMR**		Copper	0.9	05
2.3 V5 4motion	110	AGZ	12/98 → 10/00	**D6KMR**		Copper	0.9	05
BORA III								
1.6	75	BSF	10/05 → 10/10	**YJT6KMR**		Copper	1.0	04
	75	BSE	10/05 → 10/10	**YJT6KMR**		Copper	1.0	04
	75	BGU	10/05 → 10/10	**YJT6KMR**		Copper	1.0	04
	75	CCSA	10/05 → 10/10	**YJT6KMR**		Copper	1.0	04
1.6 FSI	85	BLF	09/05 → 10/10	**YJT6KMR**	→ 06/08	Copper	1.0	04
1.6 MultiFuel	75	CCSA	01/08 → 10/10	**YJT6KMR**		Copper	1.0	04

	kW					CORE		QTY
VOLKSWAGEN								
BORA III								
2.0 FSI	110	BVZ	08/05 → 10/10	**CT6KMR**		Copper	0.8	04
	110	BLX	08/05 → 10/10	**7LPR**		Nickel	0.8	04
	110	BVY	08/05 → 10/10	**7LPR**		Nickel	0.8	04
	110	BVZ	08/05 → 10/10	**7LPR**		Nickel	0.8	04
	110	BLY	08/05 → 10/10	**7LPR**		Nickel	0.8	04
	110	BLR	08/05 → 10/10	**7LPR**		Nickel	0.8	04
	110	BLX	08/05 → 10/10	**CT6KMR**		Copper	0.8	04
	110	BLY	08/05 → 10/10	**CT6KMR**		Copper	0.8	04
	110	BLR	08/05 → 10/10	**CT6KMR**		Copper	0.8	04
	110	BVY	08/05 → 10/10	**CT6KMR**		Copper	0.8	04
CABRIO III								
1.6	74	AKS	10/94 → 05/98	**YJT6KMR**		Copper	1.0	04
	74	AFT	10/94 → 05/98	**YJT6KMR**		Copper	1.0	04
	74	AEK	10/94 → 05/98	**YJT6KMR**		Copper	1.0	04
1.8	66	ABS	07/93 → 05/98	**CJT6FMR**		Copper	0.8	04
	66	ADZ	07/93 → 05/98	**CJT6FMR**		Copper	0.8	04
2.0	85	AKR	07/93 → 05/98	**CJT6FMR**		Copper	0.8	04
	85	2E	07/93 → 05/98	**CJT6FMR**		Copper	0.8	04
	85	AGG	07/93 → 05/98	**CJT6FMR**		Copper	0.8	04
	85	ADY	07/93 → 05/98	**CJT6FMR**		Copper	0.8	04
CABRIO IV								
1.6	74	AKS	06/98 → 06/02	**YJT6KMR**		Copper	1.0	04
	74	AFT	06/98 → 06/02	**YJT6KMR**		Copper	1.0	04
1.8	66	ANP	06/98 → 06/02	**CJT6FMR**		Copper	0.8	04
	66	ADZ	06/98 → 06/02	**CJT6FMR**		Copper	0.8	04
2.0	85	ATU	06/98 → 06/02	**CJT6FMR**		Copper	0.8	04
	85	AWG	06/98 → 06/02	**CJT6FMR**		Copper	0.8	04
	85	AWF	06/98 → 06/02	**CJT6FMR**		Copper	0.8	04
	85	AKR	06/98 → 06/02	**CJT6FMR**		Copper	0.8	04
	85	AGG	06/98 → 06/02	**CJT6FMR**		Copper	0.8	04
CADDY II								
1.4	55	AUA	08/00 → 01/04	**YJT6KMR**		Copper	1.0	04
60 1.4	44	AEX	11/95 → 01/04	**CJT6FMR**		Copper	0.8	04
	44	AUD	11/95 → 01/04	**CJT6FMR**		Copper	0.8	04
	44	APQ	11/95 → 01/04	**CJT6FMR**		Copper	0.8	04
75 1.6	55	1F	11/95 → 05/97	**CJT6FMR**		Copper	0.8	04
	55	AEE	11/95 → 09/00	**CJT6FMR**		Copper	0.8	04
CADDY III								
1.4	55	BCA	03/04 → 05/06	**YJT6KMR**		Copper	1.0	04
1.6	75	BGU	04/04 →	**YJT6KMR**		Copper	1.0	04
	75	BSE	04/04 →	**YJT6KMR**		Copper	1.0	04
	75	BSF	04/04 →	**YJT6KMR**		Copper	1.0	04
1.6 BiFuel	75	CHGA	05/11 →	**YJT6KMR**		Copper	1.0	04

	kW					CORE		QTY
VOLKSWAGEN								
CARAVELLE IV								
2.5	81	ACU	11/90 → 04/03	**CJT6FMR**		Copper	0.8	05
	81	AAF	11/90 → 04/03	**CJT6FMR**		Copper	0.8	05
	81	AEU	11/90 → 04/03	**CJT6FMR**		Copper	0.8	05
	81	AEN	11/90 → 04/03	**CJT6FMR**		Copper	0.8	05
2.5 Syncro	85	AET	07/96 → 04/03	**CJT6FMR**		Copper	0.8	05
	85	APL	07/96 → 04/03	**CJT6FMR**		Copper	0.8	05
	85	AVT	07/96 → 04/03	**CJT6FMR**		Copper	0.8	05
2.8 VR 6	103	AES	11/95 → 04/00	**D6KMR**		Copper	0.9	06
2.8 VR6 Syncro	103	AES	01/96 → 04/96	**D6KMR**		Copper	0.9	06
CORRADO								
2.0 i	85	ADY	04/93 → 12/95	**CJT6FMR**		Copper	0.8	04
	85	2E	04/93 → 12/95	**CJT6FMR**		Copper	0.8	04
2.9 VR6	140	ABV	08/91 → 12/95	**D6KMR**		Copper	0.9	06
DERBY								
54 1.4	40	ANX	01/98 → 08/99	**CJT6FMR**		Copper	0.8	04
60 1.4	44	AKK	12/95 → 09/01	**CJT6FMR**		Copper	0.8	04
	44	AKV	12/95 → 09/01	**CJT6FMR**		Copper	0.8	04
	44	AUD	12/95 → 09/01	**CJT6FMR**		Copper	0.8	04
	44	AEX	12/95 → 09/01	**CJT6FMR**		Copper	0.8	04
	44	APQ	12/95 → 09/01	**CJT6FMR**		Copper	0.8	04
	44	ANW	12/95 → 09/01	**CJT6FMR**		Copper	0.8	04
75 1.4 16V	55	APE	10/99 → 09/01	**YJT6KMR**		Copper	1.0	04
	55	AUA	10/99 → 09/01	**YJT6KMR**		Copper	1.0	04
75 1.6	55	1F	11/95 → 09/97	**CJT6FMR**		Copper	0.8	04
	55	AEE	11/95 → 09/01	**CJT6FMR**		Copper	0.8	04
	55	ALM	11/95 → 09/01	**CJT6FMR**		Copper	0.8	04
90	66	ABS	01/97 → 09/01	**CJT6FMR**	08/98 →	Copper	0.8	04
	66	ADD	01/97 → 09/01	**CJT6FMR**	08/98 →	Copper	0.8	04
	66	ADZ	01/97 → 09/01	**CJT6FMR**	08/98 →	Copper	0.8	04
90 1.8	66	ABS	01/97 → 09/01	**CJT6FMR**	08/98 →	Copper	0.8	04
	66	ADD	01/97 → 09/01	**CJT6FMR**	08/98 →	Copper	0.8	04
	66	ADZ	01/97 → 09/01	**CJT6FMR**	08/98 →	Copper	0.8	04
100	74	APF	12/95 → 09/01	**YJT6KMR**		Copper	1.0	04
	74	AEH	12/95 → 09/01	**YJT6KMR**		Copper	1.0	04
	74	AKL	12/95 → 09/01	**YJT6KMR**		Copper	1.0	04
	74	AFT	12/95 → 09/01	**YJT6KMR**		Copper	1.0	04
	74	AUR	12/95 → 09/01	**YJT6KMR**		Copper	1.0	04
100 1.6	74	APF	12/95 → 09/01	**YJT6KMR**		Copper	1.0	04
	74	AEH	12/95 → 09/01	**YJT6KMR**		Copper	1.0	04
	74	AKL	12/95 → 09/01	**YJT6KMR**		Copper	1.0	04
	74	AFT	12/95 → 09/01	**YJT6KMR**		Copper	1.0	04
	74	AUR	12/95 → 09/01	**YJT6KMR**		Copper	1.0	04

	kW					CORE		QTY
VOLKSWAGEN								
DERBY								
1.4	55	BBY	07/03 →	**YJT6KMR**	→ 06/05	Copper	1.0	04
	55	BKY	07/03 →	**YJT6KMR**	→ 06/05	Copper	1.0	04
	74	BBZ	11/03 →	**YJT6KMR**		Copper	1.0	04
EOS								
1.6 FSI	85	BLF	06/06 → 05/08	**CT6KMR**		Copper	0.8	04
	85	BLF	06/06 → 05/08	**7LPR**		Nickel	0.8	04
2.0 FSI	110	BVZ	03/06 → 05/08	**CT6KMR**		Copper	0.8	04
	110	BVY	03/06 → 05/08	**CT6KMR**		Copper	0.8	04
	110	BVZ	03/06 → 05/08	**7LPR**		Nickel	0.8	04
	110	BVY	03/06 → 05/08	**7LPR**		Nickel	0.8	04
FOX								
1.2	40	CHFB	04/05 →	**A5KMR**		Copper	1.1	03
	40	BMD	04/05 →	**A5KMR**		Copper	1.1	03
GOLF II								
1.8 i Cat Syncro	66	RP	08/87 → 10/91	**CJT6FMR**		Copper	0.8	04
1.8 Syncro	72	1P	08/88 → 07/91	**CW7LP**		Nickel	0.8	04
1.8 Syncro	72	1P	08/88 → 07/91	**CT6FM**		Copper	0.8	04
GOLF III								
1.4	40	ABD	07/93 → 04/99	**CJT6FMR**		Copper	0.8	04
	44	AEX	10/91 → 08/97	**CJT6FMR**		Copper	0.8	04
	44	ABD	10/91 → 08/97	**CJT6FMR**		Copper	0.8	04
	44	APQ	07/93 → 04/99	**CJT6FMR**		Copper	0.8	04
1.6	55	AEA	09/92 → 08/97	**CJT6FMR**		Copper	0.8	04
	55	ABU	09/92 → 08/97	**CJT6FMR**		Copper	0.8	04
	55	AEE	09/92 → 08/97	**CJT6FMR**		Copper	0.8	04
	74	AEK	07/95 → 08/97	**YJT6KMR**		Copper	1.0	04
	74	AFT	07/95 → 08/97	**YJT6KMR**		Copper	1.0	04
	74	AKS	07/95 → 08/97	**YJT6KMR**		Copper	1.0	04
1.6 1.6 MI	74	AEK	07/95 → 08/97	**YJT6KMR**		Copper	1.0	04
	74	AFT	07/95 → 08/97	**YJT6KMR**		Copper	1.0	04
	74	AKS	07/95 → 08/97	**YJT6KMR**		Copper	1.0	04
1.8	55	AAM	11/91 → 08/97	**CJT6FMR**		Copper	0.8	04
	66	ANP	07/93 → 04/99	**CJT6FMR**		Copper	0.8	04
	66	ABS	11/91 → 08/97	**CJT6FMR**		Copper	0.8	04
	66	ACC	11/91 → 08/97	**CJT6FMR**		Copper	0.8	04
	66	ADZ	11/91 → 08/97	**CJT6FMR**		Copper	0.8	04
1.8 Syncro (1HX1)	66	ABS	01/93 → 08/97	**CJT6FMR**		Copper	0.8	04
	66	ADZ	01/93 → 08/97	**CJT6FMR**		Copper	0.8	04
2.0	85	ADY	11/91 → 08/97	**CJT6FMR**		Copper	0.8	04
	85	AKR	11/91 → 08/97	**CJT6FMR**		Copper	0.8	04
	85	ABA	11/91 → 08/97	**CJT6FMR**		Copper	0.8	04
	85	2E	11/91 → 08/97	**CJT6FMR**		Copper	0.8	04
	85	AGG	11/91 → 08/97	**CJT6FMR**		Copper	0.8	04
2.0 GL	79	AEP	08/95 → 09/97	**CJT6FMR**		Copper	0.8	04

	kW					CORE		QTY
VOLKSWAGEN								
GOLF III								
2.0 Syncro (1HX1)	85	AGG	08/95 → 08/97	**CJT6FMR**		Copper	0.8	04
2.8 VR6	120	AAA	08/95 → 09/97	**D6KMR**		Copper	0.9	06
	128	AAA	01/92 → 08/97	**D6KMR**		Copper	0.9	06
2.9 VR6 Syncro	140	ABV	10/94 → 04/99	**D6KMR**		Copper	0.9	06
2.9 VR6 Syncro (1HX1)	140	ABV	10/94 → 08/97	**D6KMR**		Copper	0.9	06
GOLF IV								
1.4 16V	55	BCA	08/97 → 06/05	**YJT6KMR**	02/01 →	Copper	1.0	04
	55	AKQ	08/97 → 06/05	**YJT6KMR**	02/01 →	Copper	1.0	04
	55	APE	08/97 → 06/05	**YJT6KMR**	02/01 →	Copper	1.0	04
	55	AXP	08/97 → 06/05	**YJT6KMR**	02/01 →	Copper	1.0	04
	55	AHW	08/97 → 06/05	**YJT6KMR**	02/01 →	Copper	1.0	04
1.6	74	AFT	06/98 → 06/02	**YJT6KMR**		Copper	1.0	04
	74	AKS	06/98 → 06/02	**YJT6KMR**		Copper	1.0	04
	74	BAH	02/01 → 06/01	**YJT6KMR**		Copper	1.0	04
	74	APF	08/97 → 05/04	**YJT6KMR**		Copper	1.0	04
	74	AEH	08/97 → 05/04	**YJT6KMR**		Copper	1.0	04
	74	AKL	08/97 → 05/04	**YJT6KMR**		Copper	1.0	04
	75	AVU	08/00 → 06/05	**YJT6KMR**		Copper	1.0	04
	75	BJH	08/00 → 06/05	**YJT6KMR**		Copper	1.0	04
	75	BFQ	08/00 → 06/05	**YJT6KMR**		Copper	1.0	04
	78	AWB	08/03 → 06/05	**YJT6KMR**		Copper	1.0	04
1.6 16V	77	ATN	02/00 → 06/05	**YJT6KMR**		Copper	1.0	04
	77	AUS	02/00 → 06/05	**YJT6KMR**		Copper	1.0	04
	77	AZD	02/00 → 06/05	**YJT6KMR**		Copper	1.0	04
	77	BCB	02/00 → 06/05	**YJT6KMR**		Copper	1.0	04
1.6 FSI	81	BAD	01/02 → 06/05	**YJT6KMR**		Copper	1.0	04
1.6 Trip	74	BAH	02/01 → 06/01	**YJT6KMR**		Copper	1.0	04
1.8	66	ANP	06/98 → 06/02	**CJT6FMR**		Copper	0.8	04
	66	ADZ	06/98 → 06/02	**CJT6FMR**		Copper	0.8	04
	92	BAF	08/97 → 06/05	**YJT6KMR**		Copper	1.0	04
	92	AGN	08/97 → 06/05	**YJT6KMR**		Copper	1.0	04
1.8 4motion	92	AGN	05/98 → 06/05	**YJT6KMR**		Copper	1.0	04
2.0	85	AWF	06/98 → 06/02	**CJT6FMR**		Copper	0.8	04
	85	AKR	06/98 → 06/02	**CJT6FMR**		Copper	0.8	04
	85	AWG	06/98 → 06/02	**CJT6FMR**		Copper	0.8	04
	85	AGG	06/98 → 06/02	**CJT6FMR**		Copper	0.8	04
	85	ATU	06/98 → 06/02	**CJT6FMR**		Copper	0.8	04
	85	APK	07/98 → 05/04	**YJT6KMR**		Copper	1.0	04
	85	AQY	07/98 → 05/04	**YJT6KMR**		Copper	1.0	04
	85	AZG	07/98 → 05/04	**YJT6KMR**		Copper	1.0	04
	85	BER	07/98 → 05/04	**YJT6KMR**		Copper	1.0	04
	85	AZJ	07/98 → 05/04	**YJT6KMR**		Copper	1.0	04

	kW					CORE		QTY
VOLKSWAGEN								
GOLF IV								
2.0 4motion	85	AZH	10/00 → 06/05	**YJT6KMR**		Copper	1.0	04
	85	AZJ	10/00 → 06/05	**YJT6KMR**		Copper	1.0	04
2.3 V5	110	AGZ	08/97 → 10/00	**D6KMR**		Copper	0.9	05
2.3 V5 4motion	110	AGZ	12/98 → 10/00	**D6KMR**		Copper	0.9	05
GOLF PLUS								
1.4 16V	55	BCA	01/05 → 11/06	**YJT6KMR**	→ 05/06	Copper	1.0	04
1.4 FSI	66	BLN	07/05 → 11/06	**YJT6KMR**	→ 05/06	Copper	1.0	04
1.6	75	CMXA	05/05 → 12/13	**YJT6KMR**		Copper	1.0	04
	75	CCSA	05/05 → 12/13	**YJT6KMR**		Copper	1.0	04
	75	BSF	05/05 → 12/13	**YJT6KMR**		Copper	1.0	04
	75	BSE	05/05 → 12/13	**YJT6KMR**		Copper	1.0	04
1.6 BiFuel	75	CHGA	05/09 → 12/13	**YJT6KMR**		Copper	1.0	04
1.6 FSI	85	BLF	01/05 → 05/08	**YJT6KMR**		Copper	1.0	04
1.6 MultiFuel	75	CMXA	11/07 → 12/13	**YJT6KMR**	05/09 →	Copper	1.0	04
	75	CCSA	11/07 → 12/13	**YJT6KMR**	05/09 →	Copper	1.0	04
2.0 FSI	110	BVZ	05/05 → 06/08	**7LPR**		Nickel	0.8	04
	110	BVY	05/05 → 06/08	**7LPR**		Nickel	0.8	04
	110	BLY	05/05 → 06/08	**7LPR**		Nickel	0.8	04
	110	BLR	05/05 → 06/08	**7LPR**		Nickel	0.8	04
	110	BVZ	05/05 → 06/08	**CT6KMR**		Copper	0.8	04
	110	BVY	05/05 → 06/08	**CT6KMR**		Copper	0.8	04
	110	BLY	05/05 → 06/08	**CT6KMR**		Copper	0.8	04
	110	BLR	05/05 → 06/08	**CT6KMR**		Copper	0.8	04
GOLF V								
1.4 16V	55	BCA	10/03 → 05/06	**YJT6KMR**		Copper	1.0	04
1.4 FSI	66	BKG	10/03 → 07/06	**YJT6KMR**	→ 05/05	Copper	1.0	04
	66	BLN	10/03 → 07/06	**YJT6KMR**	→ 05/05	Copper	1.0	04
1.6	75	BSF	01/04 → 11/08	**YJT6KMR**		Copper	1.0	04
	75	BSE	01/04 → 11/08	**YJT6KMR**		Copper	1.0	04
	75	BGU	01/04 → 11/08	**YJT6KMR**		Copper	1.0	04
1.6 FSI	85	BAG	10/03 → 07/08	**YJT6KMR**		Copper	1.0	04
	85	BLP	10/03 → 07/08	**YJT6KMR**		Copper	1.0	04
	85	BLF	10/03 → 07/08	**YJT6KMR**		Copper	1.0	04
1.6 GL MultiFuel	75	CCSA	10/07 → 11/08	**YJT6KMR**		Copper	1.0	04
1.6 MultiFuel	75	CCSA	10/07 → 11/08	**YJT6KMR**		Copper	1.0	04

	kW					CORE		QTY
VOLKSWAGEN								
GOLF V								
2.0 FSI	110	AXW	01/04 → 11/08	**CT6KMR**		Copper	0.8	04
	110	BVZ	01/04 → 11/08	**CT6KMR**		Copper	0.8	04
	110	BVY	01/04 → 11/08	**CT6KMR**		Copper	0.8	04
	110	BVX	01/04 → 11/08	**CT6KMR**		Copper	0.8	04
	110	BLY	01/04 → 11/08	**CT6KMR**		Copper	0.8	04
	110	BLX	01/04 → 11/08	**CT6KMR**		Copper	0.8	04
	110	BLR	01/04 → 11/08	**CT6KMR**		Copper	0.8	04
	110	AXW	01/04 → 11/08	**7LPR**		Nickel	0.8	04
	110	BVZ	01/04 → 11/08	**7LPR**		Nickel	0.8	04
	110	BVY	01/04 → 11/08	**7LPR**		Nickel	0.8	04
	110	BVX	01/04 → 11/08	**7LPR**		Nickel	0.8	04
	110	BLY	01/04 → 11/08	**7LPR**		Nickel	0.8	04
	110	BLX	01/04 → 11/08	**7LPR**		Nickel	0.8	04
	110	BLR	01/04 → 11/08	**7LPR**		Nickel	0.8	04
	169	BYD	09/06 → 12/08	**CT6KMR**		Copper	0.8	04
	169	BYD	09/06 → 12/08	**7LPR**		Nickel	0.8	04
GOLF VI								
1.6	75	CMXA	10/08 → 11/12	**YJT6KMR**		Copper	1.0	04
	75	BSF	10/08 → 11/12	**YJT6KMR**		Copper	1.0	04
	75	BSE	10/08 → 11/12	**YJT6KMR**		Copper	1.0	04
	75	CCSA	10/08 → 11/12	**YJT6KMR**		Copper	1.0	04
1.6 BiFuel	75	CHGA	03/09 → 11/12	**YJT6KMR**		Copper	1.0	04
1.6 GLX Total Flex	75	CMXA	10/08 → 11/12	**YJT6KMR**		Copper	1.0	04
	75	CCSA	10/08 → 11/12	**YJT6KMR**		Copper	1.0	04
1.6 MultiFuel	75	CMXA	10/08 → 11/12	**YJT6KMR**		Copper	1.0	04
	75	CCSA	10/08 → 11/12	**YJT6KMR**		Copper	1.0	04
JETTA I								
1.6	75	BGU	10/05 → 10/10	**YJT6KMR**		Copper	1.0	04
	75	CCSA	10/05 → 10/10	**YJT6KMR**		Copper	1.0	04
	75	BSF	10/05 → 10/10	**YJT6KMR**		Copper	1.0	04
	75	BSE	10/05 → 10/10	**YJT6KMR**		Copper	1.0	04
1.6 FSI	85	BLF	09/05 → 10/10	**YJT6KMR**	→ 06/08	Copper	1.0	04
1.6 MultiFuel	75	CCSA	01/08 → 10/10	**YJT6KMR**		Copper	1.0	04
2.0 FSI	110	BLR	08/05 → 10/10	**CT6KMR**		Copper	0.8	04
	110	BVZ	08/05 → 10/10	**CT6KMR**		Copper	0.8	04
	110	BLY	08/05 → 10/10	**CT6KMR**		Copper	0.8	04
	110	BLX	08/05 → 10/10	**CT6KMR**		Copper	0.8	04
	110	BVY	08/05 → 10/10	**CT6KMR**		Copper	0.8	04

	kW					CORE		QTY
VOLKSWAGEN								
JETTA II								
1.3 Cat	40	2G	06/87 → 12/91	**CW7LP**		Nickel	0.8	04
	40	NZ	06/87 → 12/91	**CW7LP**		Nickel	0.8	04
	40	MH	06/87 → 12/91	**CW7LP**		Nickel	0.8	04
	40	2G	06/87 → 12/91	**CT6FM**		Copper	0.8	04
	40	NZ	06/87 → 12/91	**CT6FM**		Copper	0.8	04
	40	MH	06/87 → 12/91	**CT6FM**		Copper	0.8	04
JETTA III								
2.0 FSI	110	BLY	08/05 → 10/10	**7LPR**		Nickel	0.8	04
	110	BLR	08/05 → 10/10	**7LPR**		Nickel	0.8	04
	110	BLX	08/05 → 10/10	**7LPR**		Nickel	0.8	04
	110	BVY	08/05 → 10/10	**7LPR**		Nickel	0.8	04
	110	BVZ	08/05 → 10/10	**7LPR**		Nickel	0.8	04
JETTA III (1H2)								
1.4	44	ABD	11/91 → 09/98	**CJT6FMR**	→ 07/95	Copper	0.8	04
	44	AEX	11/91 → 09/98	**CJT6FMR**	→ 07/95	Copper	0.8	04
1.6	55	AEE	09/92 → 09/98	**CJT6FMR**	→ 09/94	Copper	0.8	04
	55	ABU	09/92 → 09/98	**CJT6FMR**	→ 09/94	Copper	0.8	04
	55	AEA	09/92 → 09/98	**CJT6FMR**	→ 09/94	Copper	0.8	04
	74	AEK	10/94 → 09/98	**YJT6KMR**	12/95 →	Copper	1.0	04
	74	AFT	10/94 → 09/98	**YJT6KMR**	12/95 →	Copper	1.0	04
1.8	55	AAM	11/91 → 09/98	**CJT6FMR**		Copper	0.8	04
	66	ABS	11/91 → 09/98	**CJT6FMR**		Copper	0.8	04
	66	ACC	11/91 → 09/98	**CJT6FMR**		Copper	0.8	04
	66	ADZ	11/91 → 09/98	**CJT6FMR**		Copper	0.8	04
	66	ADD	11/91 → 09/98	**CJT6FMR**		Copper	0.8	04
2.0	85	2E	11/91 → 09/98	**CJT6FMR**		Copper	0.8	04
	85	AGG	11/91 → 09/98	**CJT6FMR**		Copper	0.8	04
	85	ADY	11/91 → 09/98	**CJT6FMR**		Copper	0.8	04
	85	AKR	11/91 → 09/98	**CJT6FMR**		Copper	0.8	04
2.8 VR6	120	AAA	08/95 → 04/96	**D6KMR**		Copper	0.9	06
	128	AAA	01/92 → 09/98	**D6KMR**		Copper	0.9	06
JETTA III (1K2)								
1.6	75	BGU	10/05 → 10/10	**YJT6KMR**		Copper	1.0	04
	75	CCSA	10/05 → 10/10	**YJT6KMR**		Copper	1.0	04
	75	BSF	10/05 → 10/10	**YJT6KMR**		Copper	1.0	04
	75	BSE	10/05 → 10/10	**YJT6KMR**		Copper	1.0	04
1.6 FSI	85	BLF	09/05 → 10/10	**YJT6KMR**	→ 06/08	Copper	1.0	04
1.6 MultiFuel	75	CCSA	01/08 → 10/10	**YJT6KMR**		Copper	1.0	04
2.0 FSI	110	BLY	08/05 → 10/10	**CT6KMR**		Copper	0.8	04
	110	BLR	08/05 → 10/10	**CT6KMR**		Copper	0.8	04
	110	BLX	08/05 → 10/10	**CT6KMR**		Copper	0.8	04
	110	BVY	08/05 → 10/10	**CT6KMR**		Copper	0.8	04
	110	BVZ	08/05 → 10/10	**CT6KMR**		Copper	0.8	04

	kW					CORE		QTY
VOLKSWAGEN								
JETTA IV								
1.4 16V	55	AHW	03/00 → 05/05	**YJT6KMR**		Copper	1.0	04
	55	BCA	03/00 → 05/05	**YJT6KMR**		Copper	1.0	04
	55	AXP	03/00 → 05/05	**YJT6KMR**		Copper	1.0	04
	55	APE	03/00 → 05/05	**YJT6KMR**		Copper	1.0	04
	55	AKQ	03/00 → 05/05	**YJT6KMR**		Copper	1.0	04
1.6	74	APF	10/98 → 05/05	**YJT6KMR**		Copper	1.0	04
	74	AKL	10/98 → 05/05	**YJT6KMR**		Copper	1.0	04
	74	AEH	10/98 → 05/05	**YJT6KMR**		Copper	1.0	04
	75	AVU	08/00 → 05/05	**YJT6KMR**		Copper	1.0	04
	75	BJH	08/00 → 05/05	**YJT6KMR**		Copper	1.0	04
	75	BFQ	08/00 → 05/05	**YJT6KMR**		Copper	1.0	04
1.6 16V	77	AUS	05/00 → 05/05	**YJT6KMR**		Copper	1.0	04
	77	AZD	05/00 → 05/05	**YJT6KMR**		Copper	1.0	04
	77	ATN	05/00 → 05/05	**YJT6KMR**		Copper	1.0	04
	77	BCB	05/00 → 05/05	**YJT6KMR**		Copper	1.0	04
1.6 FSI	81	BAD	01/02 → 05/05	**YJT6KMR**		Copper	1.0	04
1.8	92	AGN	10/98 → 05/05	**YJT6KMR**		Copper	1.0	04
	92	BAF	10/98 → 05/05	**YJT6KMR**		Copper	1.0	04
1.8 4motion	92	AGN	02/99 → 05/05	**YJT6KMR**		Copper	1.0	04
2.0	85	APK	10/98 → 05/05	**YJT6KMR**		Copper	1.0	04
	85	AQY	10/98 → 05/05	**YJT6KMR**		Copper	1.0	04
	85	AZG	10/98 → 05/05	**YJT6KMR**		Copper	1.0	04
	85	AZH	10/98 → 05/05	**YJT6KMR**		Copper	1.0	04
	85	AZJ	10/98 → 05/05	**YJT6KMR**		Copper	1.0	04
	85	BBW	10/98 → 05/05	**YJT6KMR**		Copper	1.0	04
2.0 4motion	85	AZH	04/00 → 05/05	**YJT6KMR**		Copper	1.0	04
2.0 4motion	85	AZJ	04/00 → 05/05	**YJT6KMR**		Copper	1.0	04
2.3 V5	110	AGZ	10/98 → 10/00	**D6KMR**		Copper	0.9	05
2.3 V5 4motion	110	AGZ	12/98 → 10/00	**D6KMR**		Copper	0.9	05
JETTA V								
1.6	75	BGU	10/05 → 10/10	**YJT6KMR**		Copper	1.0	04
	75	CCSA	10/05 → 10/10	**YJT6KMR**		Copper	1.0	04
	75	BSF	10/05 → 10/10	**YJT6KMR**		Copper	1.0	04
	75	BSE	10/05 → 10/10	**YJT6KMR**		Copper	1.0	04
1.6 FSI	85	BLF	09/05 → 10/10	**YJT6KMR**	→ 06/08	Copper	1.0	04
1.6 MultiFuel	75	CCSA	01/08 → 10/10	**YJT6KMR**		Copper	1.0	04

	kW					CORE		QTY
VOLKSWAGEN								
JETTA V								
2.0 FSI	110	BLR	08/05 → 10/10	**7LPR**		Nickel	0.8	04
	110	BLX	08/05 → 10/10	**7LPR**		Nickel	0.8	04
	110	BVY	08/05 → 10/10	**7LPR**		Nickel	0.8	04
	110	BVZ	08/05 → 10/10	**7LPR**		Nickel	0.8	04
	110	BLY	08/05 → 10/10	**7LPR**		Nickel	0.8	04
	110	BLR	08/05 → 10/10	**CT6KMR**		Copper	0.8	04
	110	BLX	08/05 → 10/10	**CT6KMR**		Copper	0.8	04
	110	BVY	08/05 → 10/10	**CT6KMR**		Copper	0.8	04
	110	BVZ	08/05 → 10/10	**CT6KMR**		Copper	0.8	04
	110	BLY	08/05 → 10/10	**CT6KMR**		Copper	0.8	04
KOMBI V								
2.0	85	AXA	11/03 →	**YJT6KMR**		Copper	1.0	04
LT 28-35 I								
2.0	55	CH	04/97 → 09/83	**CW7LP**		Nickel	0.8	04
2.4 i	69	1E	08/89 → 06/96	**CW7LP**		Nickel	0.8	06
LT 28-50								
2.4 i	69	1E	08/89 → 06/96	**CT6FM**		Copper	0.8	06
	69	1E	08/89 → 06/96	**CW7LP**		Nickel	0.8	06
2.4 Syncro	66	DL	08/91 → 07/92	**CT6FM**		Copper	0.8	06
LT 40-55 I								
2.4 i	69	1E	01/93 → 06/96	**CT6FM**		Copper	0.8	06
	69	1E	01/93 → 06/96	**CW7LP**		Nickel	0.8	06
LUPO								
1.0	37	AHT	10/98 → 05/00	**YJT6KMR**		Copper	1.0	04
	37	ANV	09/98 → 07/05	**CJT6FMR**	→ 05/03	Copper	0.8	04
	37	AUC	09/98 → 07/05	**CJT6FMR**	→ 05/03	Copper	0.8	04
	37	ALL	09/98 → 07/05	**CJT6FMR**	→ 05/03	Copper	0.8	04
	37	AER	09/98 → 07/05	**CJT6FMR**	→ 05/03	Copper	0.8	04
	37	ALD	09/98 → 07/05	**CJT6FMR**	→ 05/03	Copper	0.8	04
1.4 16V	55	AHW	09/98 → 07/05	**YJT6KMR**		Copper	1.0	04
	55	BBY	09/98 → 07/05	**YJT6KMR**		Copper	1.0	04
	55	APE	09/98 → 07/05	**YJT6KMR**		Copper	1.0	04
	55	AKQ	09/98 → 07/05	**YJT6KMR**		Copper	1.0	04
	55	AUA	09/98 → 07/05	**YJT6KMR**		Copper	1.0	04
	74	AQQ	08/99 → 07/05	**YJT6KMR**	→ 05/03	Copper	1.0	04
	74	AUB	08/99 → 07/05	**YJT6KMR**	→ 05/03	Copper	1.0	04
	74	AFK	08/99 → 07/05	**YJT6KMR**	→ 05/03	Copper	1.0	04
1.4 FSI	77	ARR	02/01 → 07/05	**YJT6KMR**	→ 05/03	Copper	1.0	04
1.6 GTI	92	AVY	09/00 → 07/05	**YJT6KMR**	→ 03/03	Copper	1.0	04
MULTIVAN IV								
2.5	81	ACU	11/90 → 04/03	**CJT6FMR**		Copper	0.8	05
	81	AAF	11/90 → 04/03	**CJT6FMR**		Copper	0.8	05
	81	AEU	11/90 → 04/03	**CJT6FMR**		Copper	0.8	05
	81	AEN	11/90 → 04/03	**CJT6FMR**		Copper	0.8	05

	kW					CORE		QTY
VOLKSWAGEN								
MULTIVAN IV								
2.5 Syncro	85	AVT	07/96 → 04/03	**CJT6FMR**		Copper	0.8	05
	85	AET	07/96 → 04/03	**CJT6FMR**		Copper	0.8	05
	85	APL	07/96 → 04/03	**CJT6FMR**		Copper	0.8	05
2.8 VR 6	103	AES	11/95 → 04/00	**D6KMR**		Copper	0.9	06
2.8 VR6 Syncro	103	AES	01/96 → 04/96	**D6KMR**		Copper	0.9	06
MULTIVAN V								
2.0	85	AXA	11/03 →	**YJT6KMR**		Copper	1.0	04
PASSAT (32B)								
1.6	51	PP	08/87 → 03/88	**CT6FMR**		Copper	0.8	04
PASSAT (3A2, 35I)								
1.6	53	1F	02/88 → 09/91	**CJT6FMR**		Copper	0.8	04
	53	EZ	02/88 → 09/91	**CJT6FMR**		Copper	0.8	04
	55	EZ	02/88 → 12/88	**CT5FMR**		Copper	0.8	04
	55	ABN	02/88 → 12/88	**CT5FMR**		Copper	0.8	04
	74	AFT	10/94 → 08/96	**YJT6KMR**		Copper	1.0	04
	74	AEK	10/94 → 08/96	**YJT6KMR**		Copper	1.0	04
1.8	55	AAM	08/90 → 05/97	**CJT6FMR**		Copper	0.8	04
	66	ADZ	02/88 → 05/97	**CJT6FMR**		Copper	0.8	04
	66	RP	02/88 → 05/97	**CJT6FMR**		Copper	0.8	04
	66	ABS	02/88 → 05/97	**CJT6FMR**		Copper	0.8	04
2.0	79	AEP	03/95 → 08/96	**CJT6FMR**		Copper	0.8	04
	85	ABA	02/90 → 08/96	**CJT6FMR**		Copper	0.8	04
	85	2E	02/90 → 08/96	**CJT6FMR**		Copper	0.8	04
	85	AGG	02/90 → 08/96	**CJT6FMR**		Copper	0.8	04
	85	ADY	02/90 → 08/96	**CJT6FMR**		Copper	0.8	04
2.0 Syncro	85	2E	10/90 → 08/96	**CJT6FMR**		Copper	0.8	04
	85	ADY	10/90 → 08/96	**CJT6FMR**		Copper	0.8	04
	85	AGG	10/90 → 08/96	**CJT6FMR**		Copper	0.8	04
2.8 VR6	128	AAA	06/91 → 08/96	**D6KMR**		Copper	0.9	06
2.9 VR6 Syncro	135	ABV	01/94 → 05/97	**D6KMR**		Copper	0.9	06
PASSAT (3B2)								
1.6	74	ADP	10/96 → 11/00	**YJT6KMR**		Copper	1.0	04
	74	ARM	10/96 → 11/00	**YJT6KMR**		Copper	1.0	04
	74	ANA	10/96 → 11/00	**YJT6KMR**		Copper	1.0	04
	74	AHL	10/96 → 11/00	**YJT6KMR**		Copper	1.0	04
1.8	85	AFY	01/97 → 11/00	**YJT6KMR**		Copper	1.0	04
	92	ARG	10/96 → 11/00	**YJT6KMR**		Copper	1.0	04
	92	APT	10/96 → 11/00	**YJT6KMR**		Copper	1.0	04
	92	ADR	10/96 → 11/00	**YJT6KMR**		Copper	1.0	04
1.8 20V1.8 20V	92	APT	10/96 → 11/00	**YJT6KMR**		Copper	1.0	04
	92	ADR	10/96 → 11/00	**YJT6KMR**		Copper	1.0	04
	92	ARG	10/96 → 11/00	**YJT6KMR**		Copper	1.0	04

	kW					CORE		QTY
VOLKSWAGEN								
PASSAT (3B2)								
1.8 Syncro/4motion	92	ARG	10/96 → 11/00	**YJT6KMR**		Copper	1.0	04
	92	APT	10/96 → 11/00	**YJT6KMR**		Copper	1.0	04
	92	ADR	10/96 → 11/00	**YJT6KMR**		Copper	1.0	04
2.3 VR5	110	AGZ	10/96 → 11/00	**D6KMR**		Copper	0.9	05
2.3 VR5 Syncro/4motion	110	AGZ	10/97 → 11/00	**D6KMR**		Copper	0.9	05
2.8 Protect	142	ACK	08/96 → 11/00	**D6KMR**		Copper	0.9	06
	142	APR	08/96 → 11/00	**D6KMR**		Copper	0.9	06
	142	AQD	08/96 → 11/00	**D6KMR**		Copper	0.9	06
	142	AHA	08/96 → 11/00	**D6KMR**		Copper	0.9	06
2.8 V6	132	AGE	05/97 → 09/99	**D6KMR**		Copper	0.9	06
	140	ATX	09/99 → 11/00	**D6KMR**		Copper	0.9	06
	140	BBG	09/99 → 11/00	**D6KMR**		Copper	0.9	06
	142	ACK	08/96 → 11/00	**D6KMR**		Copper	0.9	06
	142	APR	08/96 → 11/00	**D6KMR**		Copper	0.9	06
	142	AQD	08/96 → 11/00	**D6KMR**		Copper	0.9	06
	142	AHA	08/96 → 11/00	**D6KMR**		Copper	0.9	06
2.8 V6 Syncro/4motion	142	ACK	10/96 → 11/00	**D6KMR**		Copper	0.9	06
	142	ALG	10/96 → 11/00	**D6KMR**		Copper	0.9	06
	142	AHA	10/96 → 11/00	**D6KMR**		Copper	0.9	06
	142	APR	10/96 → 11/00	**D6KMR**		Copper	0.9	06
	142	AQD	10/96 → 11/00	**D6KMR**		Copper	0.9	06
PASSAT (3B3)								
1.6	75	ALZ	11/00 → 05/05	**YJT6KMR**		Copper	1.0	04
2.0	85	BFF	11/00 → 05/05	**YJT6KMR**		Copper	1.0	04
	85	AZM	11/00 → 05/05	**YJT6KMR**		Copper	1.0	04
	96	ALT	11/01 → 05/05	**YJT6KMR**		Copper	1.0	04
2.0 4motion	85	AZM	11/00 → 05/05	**YJT6KMR**		Copper	1.0	04
	142	ATQ	11/00 → 05/05	**D6KMR**		Copper	0.9	06
	142	AMX	11/00 → 05/05	**D6KMR**		Copper	0.9	06
4.0 W8 4motion	202	BDP	09/01 → 09/04	**D6KMR**		Copper	0.9	08
	202	BDN	09/01 → 09/04	**D6KMR**		Copper	0.9	08
PASSAT (3C2)								
1.6	75	BSF	05/05 → 07/10	**YJT6KMR**	→ 05/07	Copper	1.0	04
	75	BSE	05/05 → 07/10	**YJT6KMR**	→ 05/07	Copper	1.0	04
1.6 FSI	85	BLF	03/05 → 06/08	**YJT6KMR**	→ 05/07	Copper	1.0	04
2.0 FSI	110	BVZ	03/05 → 07/10	**7LPR**	→ 05/07	Nickel	0.8	04
	110	BVY	03/05 → 07/10	**7LPR**	→ 05/07	Nickel	0.8	04
	110	BLY	03/05 → 07/10	**7LPR**	→ 05/07	Nickel	0.8	04
	110	BLR	03/05 → 07/10	**7LPR**	→ 05/07	Nickel	0.8	04
	110	BVZ	03/05 → 07/10	**CT6KMR**	→ 05/07	Copper	0.8	04
	110	BVY	03/05 → 07/10	**CT6KMR**	→ 05/07	Copper	0.8	04
	110	BLY	03/05 → 07/10	**CT6KMR**	→ 05/07	Copper	0.8	04
	110	BLR	03/05 → 07/10	**CT6KMR**	→ 05/07	Copper	0.8	04

	kW					CORE		QTY
VOLKSWAGEN								
PASSAT (3C2)								
2.0 FSI 4motion	110	BVX	09/05 → 07/10	**7LPR**	→ 11/05	Nickel	0.8	04
	110	BLY	09/05 → 07/10	**7LPR**	→ 11/05	Nickel	0.8	04
	110	BLX	09/05 → 07/10	**7LPR**	→ 11/05	Nickel	0.8	04
	110	BVX	09/05 → 07/10	**CT6KMR**	→ 11/05	Copper	0.8	04
	110	BLY	09/05 → 07/10	**CT6KMR**	→ 11/05	Copper	0.8	04
	110	BLX	09/05 → 07/10	**CT6KMR**	→ 11/05	Copper	0.8	04
2.0 FSI Confortline	110	BVZ	03/05 → 07/10	**7LPR**	→ 05/07	Nickel	0.8	04
	110	BVY	03/05 → 07/10	**7LPR**	→ 05/07	Nickel	0.8	04
	110	BLY	03/05 → 07/10	**7LPR**	→ 05/07	Nickel	0.8	04
	110	BLR	03/05 → 07/10	**7LPR**	→ 05/07	Nickel	0.8	04
	110	BVZ	03/05 → 07/10	**CT6KMR**	→ 05/07	Copper	0.8	04
	110	BVY	03/05 → 07/10	**CT6KMR**	→ 05/07	Copper	0.8	04
	110	BLY	03/05 → 07/10	**CT6KMR**	→ 05/07	Copper	0.8	04
	110	BLR	03/05 → 07/10	**CT6KMR**	→ 05/07	Copper	0.8	04
PHAETON								
4.2 V8 4motion	246	BGJ	05/03 →	**YJT6KMR**		Copper	1.0	08
	246	BGH	05/03 →	**YJT6KMR**		Copper	1.0	08
POLO (6KV2)								
54 1.4	40	ANX	01/98 → 08/99	**CJT6FMR**		Copper	0.8	04
60 1.4	44	AUD	12/95 → 09/01	**CJT6FMR**		Copper	0.8	04
	44	AKK	12/95 → 09/01	**CJT6FMR**		Copper	0.8	04
	44	ANW	12/95 → 09/01	**CJT6FMR**		Copper	0.8	04
75 1.4 16V	55	APE	10/99 → 09/01	**YJT6KMR**		Copper	1.0	04
	55	AUA	10/99 → 09/01	**YJT6KMR**		Copper	1.0	04
75 1.6	55	1F	11/95 → 09/97	**CJT6FMR**		Copper	0.8	04
	55	ALM	11/95 → 09/01	**CJT6FMR**		Copper	0.8	04
90	66	ADD	01/97 → 09/01	**CJT6FMR**	08/98 →	Copper	0.8	04
	66	ADZ	01/97 → 09/01	**CJT6FMR**	08/98 →	Copper	0.8	04
	66	ABS	01/97 → 09/01	**CJT6FMR**	08/98 →	Copper	0.8	04
90 1.8	66	ADD	01/97 → 09/01	**CJT6FMR**	08/98 →	Copper	0.8	04
	66	ADZ	01/97 → 09/01	**CJT6FMR**	08/98 →	Copper	0.8	04
	66	ABS	01/97 → 09/01	**CJT6FMR**	08/98 →	Copper	0.8	04
100	74	AKL	12/95 → 09/01	**YJT6KMR**		Copper	1.0	04
	74	APF	12/95 → 09/01	**YJT6KMR**		Copper	1.0	04
	74	AEH	12/95 → 09/01	**YJT6KMR**		Copper	1.0	04
	74	AUR	12/95 → 09/01	**YJT6KMR**		Copper	1.0	04
	74	AFT	12/95 → 09/01	**YJT6KMR**		Copper	1.0	04
100 1.6	74	APF	12/95 → 09/01	**YJT6KMR**		Copper	1.0	04
	74	AEH	12/95 → 09/01	**YJT6KMR**		Copper	1.0	04
	74	AUR	12/95 → 09/01	**YJT6KMR**		Copper	1.0	04
	74	AFT	12/95 → 09/01	**YJT6KMR**		Copper	1.0	04
	74	AKL	12/95 → 09/01	**YJT6KMR**		Copper	1.0	04

	kW					CORE		QTY
VOLKSWAGEN								
POLO (6KV5)								
1.4	44	AUD	05/97 → 09/01	**CJT6FMR**		Copper	0.8	04
	44	AKK	05/97 → 09/01	**CJT6FMR**		Copper	0.8	04
	44	AKV	05/97 → 09/01	**CJT6FMR**		Copper	0.8	04
	44	ANW	05/97 → 09/01	**CJT6FMR**		Copper	0.8	04
1.6	55	ALM	05/97 → 09/01	**CJT6FMR**		Copper	0.8	04
	55	AEE	05/97 → 09/01	**CJT6FMR**		Copper	0.8	04
	74	AFT	05/97 → 09/01	**YJT6KMR**		Copper	1.0	04
	74	AUR	05/97 → 09/01	**YJT6KMR**		Copper	1.0	04
	74	AKL	05/97 → 09/01	**YJT6KMR**		Copper	1.0	04
	74	APF	05/97 → 09/01	**YJT6KMR**		Copper	1.0	04
POLO (6N1)								
45 1.0	33	AEV	10/94 → 09/96	**CJT6FMR**		Copper	0.8	04
50 1.0	37	AER	09/96 → 10/99	**CJT6FMR**		Copper	0.8	04
	37	ALL	09/96 → 10/99	**CJT6FMR**		Copper	0.8	04
55 1.3	40	ADX	10/94 → 07/95	**CJT6FMR**		Copper	0.8	04
55 1.4	40	AEX	08/95 → 10/99	**YJT6KMR**		Copper	1.0	04
60 1.4	44	AEX	07/95 → 10/99	**CJT6FMR**		Copper	0.8	04
	44	AKV	07/95 → 10/99	**CJT6FMR**		Copper	0.8	04
	44	APQ	07/95 → 10/99	**CJT6FMR**		Copper	0.8	04
75 1.6	55	AHS	10/94 → 10/99	**CJT6FMR**		Copper	0.8	04
	55	AEE	10/94 → 10/99	**CJT6FMR**		Copper	0.8	04
	55	AEA	10/94 → 10/99	**CJT6FMR**		Copper	0.8	04
100 1.4 16V	74	AFH	04/96 → 10/99	**YJT6KMR**		Copper	1.0	04
120 1.6 16V GTI	88	AJV	09/98 → 10/99	**YJT6KMR**		Copper	1.0	04
POLO (6N2)								
1.4	40	AKP	10/99 → 09/01	**YJT6KMR**		Copper	1.0	04
	40	ANX	10/99 → 09/01	**YJT6KMR**		Copper	1.0	04
1.4 16V	55	APE	10/99 → 09/01	**YJT6KMR**		Copper	1.0	04
	55	AUA	10/99 → 09/01	**YJT6KMR**		Copper	1.0	04
	55	AHW	10/99 → 09/01	**YJT6KMR**		Copper	1.0	04
	74	AFK	10/99 → 09/01	**YJT6KMR**		Copper	1.0	04
	74	AUB	10/99 → 09/01	**YJT6KMR**		Copper	1.0	04
	74	AQQ	10/99 → 09/01	**YJT6KMR**		Copper	1.0	04
1.6 16V GTI	92	AVY	10/99 → 09/01	**YJT6KMR**		Copper	1.0	04
	92	ARC	10/99 → 09/01	**YJT6KMR**		Copper	1.0	04
POLO (6NF)								
1.4	44	AEX	05/98 → 12/99	**CJT6FMR**		Copper	0.8	04
	44	APQ	05/98 → 12/99	**CJT6FMR**		Copper	0.8	04

	kW					CORE		QTY
VOLKSWAGEN								
POLO (86C, 80)								
1.0 Cat	33	ACM	08/89 → 09/94	**CW7LP**		Nickel	0.8	04
	33	AAU	08/89 → 09/94	**CW7LP**		Nickel	0.8	04
	33	AAK	08/89 → 09/94	**CW7LP**		Nickel	0.8	04
	33	ACM	08/89 → 09/94	**CT6FM**		Copper	0.8	04
	33	AAU	08/89 → 09/94	**CT6FM**		Copper	0.8	04
	33	AAK	08/89 → 09/94	**CT6FM**		Copper	0.8	04
1.3 Cat	40	NZ	07/87 → 09/94	**CT6FM**		Copper	0.8	04
	40	MH	07/87 → 09/94	**CT6FM**		Copper	0.8	04
POLO (9A4)								
1.4	55	BBY	07/03 →	**YJT6KMR**	→ 06/05	Copper	1.0	04
	55	BKY	07/03 →	**YJT6KMR**	→ 06/05	Copper	1.0	04
	74	BBZ	11/03 →	**YJT6KMR**		Copper	1.0	04
POLO (9N_)								
1.2	40	AWY	01/02 → 05/07	**A5KMR**	→ 07/04	Copper	1.1	03
	40	BMD	01/02 → 05/07	**A5KMR**	→ 07/04	Copper	1.1	03
	44	BBM	05/07 → 11/09	**A5KMR**		Copper	1.1	03
1.2 12V	47	AZQ	10/01 → 07/07	**A5KMR**		Copper	1.1	03
	47	BME	10/01 → 07/07	**A5KMR**		Copper	1.1	03
	51	BZG	05/07 → 11/09	**A5KMR**		Copper	1.1	03
1.4 16V	55	BKY	10/01 → 05/08	**YJT6KMR**		Copper	1.0	04
	55	BBY	10/01 → 05/08	**YJT6KMR**		Copper	1.0	04
	55	AUA	10/01 → 05/08	**A5KMR**		Copper	1.1	04
	74	BBZ	10/01 → 05/08	**YJT6KMR**		Copper	1.0	04
	74	AUB	10/01 → 05/08	**YJT6KMR**		Copper	1.0	04
1.4 FSI	63	AXU	02/02 → 07/06	**YJT6KMR**		Copper	1.0	04
SHARAN								
2.0	85	ATM	09/95 → 03/10	**CJT6FMR**		Copper	0.8	04
	85	ADY	09/95 → 03/10	**CJT6FMR**		Copper	0.8	04
2.0 LPG	85	ATM	04/06 → 03/10	**YJT6KMR**	05/08 →	Copper	1.0	04
2.8 VR6	128	AAA	09/95 → 04/00	**D6KMR**		Copper	0.9	06
	128	AMY	09/95 → 04/00	**D6KMR**		Copper	0.9	06
2.8 VR6 Syncro	128	AAA	11/96 → 04/00	**D6KMR**		Copper	0.9	06
	128	AMY	11/96 → 04/00	**D6KMR**		Copper	0.9	06
TOUAREG								
4.2 V8	228	BHX	12/02 → 11/06	**YJT6KMR**		Copper	1.0	08
	228	AXQ	12/02 → 11/06	**YJT6KMR**		Copper	1.0	08
TOURAN								
1.6	75	BSF	07/03 → 05/10	**YJT6KMR**		Copper	1.0	04
	75	BSE	07/03 → 05/10	**YJT6KMR**		Copper	1.0	04
	75	BGU	07/03 → 05/10	**YJT6KMR**		Copper	1.0	04
1.6 FSI	85	BLF	02/03 → 01/07	**YJT6KMR**		Copper	1.0	04
	85	BAG	02/03 → 01/07	**YJT6KMR**		Copper	1.0	04
	85	BLP	02/03 → 01/07	**YJT6KMR**		Copper	1.0	04

	kW					CORE		QTY
VOLKSWAGEN								
TOURAN								
2.0 FSI	110	BVZ	10/03 → 11/05	**CT6KMR**		Copper	0.8	04
	110	BVY	10/03 → 11/05	**CT6KMR**		Copper	0.8	04
	110	BLR	10/03 → 11/05	**CT6KMR**		Copper	0.8	04
	110	AXW	10/03 → 11/05	**CT6KMR**		Copper	0.8	04
	110	BLY	10/03 → 11/05	**CT6KMR**		Copper	0.8	04
	110	BLX	10/03 → 11/05	**CT6KMR**		Copper	0.8	04
	110	BVZ	10/03 → 11/05	**7LPR**		Nickel	0.8	04
	110	BVY	10/03 → 11/05	**7LPR**		Nickel	0.8	04
	110	BLR	10/03 → 11/05	**7LPR**		Nickel	0.8	04
	110	AXW	10/03 → 11/05	**7LPR**		Nickel	0.8	04
	110	BLY	10/03 → 11/05	**7LPR**		Nickel	0.8	04
	110	BLX	10/03 → 11/05	**7LPR**		Nickel	0.8	04
TRANSPORTER IV								
2.0	62	AAC	07/90 → 04/03	**CJT6FMR**		Copper	0.8	04
2.5	81	AAF	11/90 → 04/03	**CJT6FMR**		Copper	0.8	05
	81	AEN	11/90 → 04/03	**CJT6FMR**		Copper	0.8	05
	81	ACU	11/90 → 04/03	**CJT6FMR**		Copper	0.8	05
	81	AEU	11/90 → 04/03	**CJT6FMR**		Copper	0.8	05
	85	AET	08/96 → 04/03	**CJT6FMR**	05/99 →	Copper	0.8	05
	85	AVT	08/96 → 04/03	**CJT6FMR**	05/99 →	Copper	0.8	05
	85	APL	08/96 → 04/03	**CJT6FMR**	05/99 →	Copper	0.8	05
2.5 Syncro	85	APL	08/96 → 04/03	**CJT6FMR**		Copper	0.8	05
	85	AVT	08/96 → 04/03	**CJT6FMR**		Copper	0.8	05
	85	AET	08/96 → 04/03	**CJT6FMR**		Copper	0.8	05
2.8 VR6	103	AES	05/96 → 05/00	**D6KMR**		Copper	0.9	06
TRANSPORTER T4								
2.0	62	AAC	07/90 → 04/03	**CJT6FMR**		Copper	0.8	04
2.5	81	AAF	11/90 → 04/03	**CJT6FMR**		Copper	0.8	05
	81	AEN	11/90 → 04/03	**CJT6FMR**		Copper	0.8	05
	81	ACU	11/90 → 04/03	**CJT6FMR**		Copper	0.8	05
	81	AEU	11/90 → 04/03	**CJT6FMR**		Copper	0.8	05
	85	AET	08/96 → 04/03	**CJT6FMR**	05/99 →	Copper	0.8	05
	85	AVT	08/96 → 04/03	**CJT6FMR**	05/99 →	Copper	0.8	05
	85	APL	08/96 → 04/03	**CJT6FMR**	05/99 →	Copper	0.8	05
2.5 Syncro	85	AVT	08/96 → 04/03	**CJT6FMR**		Copper	0.8	05
	85	AET	08/96 → 04/03	**CJT6FMR**		Copper	0.8	05
	85	APL	08/96 → 04/03	**CJT6FMR**		Copper	0.8	05
2.8 VR6	103	AES	05/96 → 05/00	**D6KMR**		Copper	0.9	06
TRANSPORTER T5								
2.0	85	AXA	11/03 →	**YJT6KMR**		Copper	1.0	04

	kW					CORE		QTY
VOLKSWAGEN								
VAN II								
1.4	55	AUA	08/00 → 01/04	**YJT6KMR**		Copper	1.0	04
60 1.4	44	APQ	11/95 → 01/04	**CJT6FMR**		Copper	0.8	04
	44	AEX	11/95 → 01/04	**CJT6FMR**		Copper	0.8	04
	44	AUD	11/95 → 01/04	**CJT6FMR**		Copper	0.8	04
75 1.6	55	1F	11/95 → 05/97	**CJT6FMR**		Copper	0.8	04
	55	AEE	11/95 → 09/00	**CJT6FMR**		Copper	0.8	04
VENTO								
1.4	44	ABD	11/91 → 09/98	**CJT6FMR**	→ 07/95	Copper	0.8	04
	44	AEX	11/91 → 09/98	**CJT6FMR**	→ 07/95	Copper	0.8	04
1.6	55	ABU	09/92 → 09/98	**CJT6FMR**	→ 09/94	Copper	0.8	04
	55	AEA	09/92 → 09/98	**CJT6FMR**	→ 09/94	Copper	0.8	04
	55	AEE	09/92 → 09/98	**CJT6FMR**	→ 09/94	Copper	0.8	04
	74	AEK	10/94 → 09/98	**YJT6KMR**	12/95 →	Copper	1.0	04
	74	AFT	10/94 → 09/98	**YJT6KMR**	12/95 →	Copper	1.0	04
1.8	55	AAM	11/91 → 09/98	**CJT6FMR**		Copper	0.8	04
	66	ABS	11/91 → 09/98	**CJT6FMR**		Copper	0.8	04
	66	ACC	11/91 → 09/98	**CJT6FMR**		Copper	0.8	04
	66	ADZ	11/91 → 09/98	**CJT6FMR**		Copper	0.8	04
	66	ADD	11/91 → 09/98	**CJT6FMR**		Copper	0.8	04
2.0	85	2E	11/91 → 09/98	**CJT6FMR**		Copper	0.8	04
	85	AGG	11/91 → 09/98	**CJT6FMR**		Copper	0.8	04
	85	ADY	11/91 → 09/98	**CJT6FMR**		Copper	0.8	04
	85	AKR	11/91 → 09/98	**CJT6FMR**		Copper	0.8	04
2.8 VR6	128	AAA	01/92 → 09/98	**D6KMR**		Copper	0.9	06
	120	AAA	08/95 → 04/96	**D6KMR**		Copper	0.9	06
VENTO III								
1.6	75	BGU	10/05 → 10/10	**YJT6KMR**		Copper	1.0	04
	75	CCSA	10/05 → 10/10	**YJT6KMR**		Copper	1.0	04
	75	BSF	10/05 → 10/10	**YJT6KMR**		Copper	1.0	04
	75	BSE	10/05 → 10/10	**YJT6KMR**		Copper	1.0	04
1.6 FSI	85	BLF	09/05 → 10/10	**YJT6KMR**	→ 06/08	Copper	1.0	04
1.6 MultiFuel	75	CCSA	01/08 → 10/10	**YJT6KMR**		Copper	1.0	04
2.0 FSI	110	BVY	08/05 → 10/10	**CT6KMR**		Copper	0.8	04
	110	BVZ	08/05 → 10/10	**CT6KMR**		Copper	0.8	04
	110	BLY	08/05 → 10/10	**CT6KMR**		Copper	0.8	04
	110	BLR	08/05 → 10/10	**CT6KMR**		Copper	0.8	04
	110	BLX	08/05 → 10/10	**CT6KMR**		Copper	0.8	04
	110	BVY	08/05 → 10/10	**7LPR**		Nickel	0.8	04
	110	BVZ	08/05 → 10/10	**7LPR**		Nickel	0.8	04
	110	BLY	08/05 → 10/10	**7LPR**		Nickel	0.8	04
	110	BLR	08/05 → 10/10	**7LPR**		Nickel	0.8	04
	110	BLX	08/05 → 10/10	**7LPR**		Nickel	0.8	04

	kW					CORE		QTY
VOLVO								
340-360								
1.4	51	B 14.4 S	08/87 → 07/88	**CT5FMR**		Copper	0.8	04
2.0	80	B 200 F	08/88 → 07/89	**CT6FMR**		Copper	0.8	04
	80	B 200 F	08/88 → 07/89	**CW7LPR**		Nickel	0.8	04
	81	B 200 F	08/87 → 07/88	**CW7LPR**		Nickel	0.8	04
	81	B 200 F	08/87 → 07/88	**CT6FMR**		Copper	0.8	04
440 K								
1.7	58	B 18 KD	09/88 → 08/92	**CW7LPR**		Nickel	0.8	04
	58	B 18 KD	09/88 → 08/92	**CT6FMR**		Copper	0.8	04
	60	B 18 KP	09/88 → 08/89	**CW7LPR**		Nickel	0.8	04
	60	B 18 K	09/88 → 08/89	**CW7LPR**		Nickel	0.8	04
	60	B 18 KP	09/88 → 08/89	**CT6FMR**		Copper	0.8	04
	60	B 18 K	09/88 → 08/89	**CT6FMR**		Copper	0.8	04
	64	B 18 KP	09/88 → 12/96	**CW7LPR**		Nickel	0.8	04
	64	B 18 KP	09/88 → 12/96	**CT6FMR**		Copper	0.8	04
	70	B 18 F	08/88 → 07/89	**CW7LPR**		Nickel	0.8	04
	70	B 18 F	08/88 → 07/89	**CT6FMR**		Copper	0.8	04
	75	B 18 FP	08/89 → 12/96	**CW7LPR**		Nickel	0.8	04
	75	B 18 FP	08/89 → 12/96	**CT6FMR**		Copper	0.8	04
	78	B 18 EP	09/88 → 12/96	**CW7LPR**		Nickel	0.8	04
	78	B 18 EP	09/88 → 12/96	**CT6FMR**		Copper	0.8	04
1.8	66	B 18 U	08/91 → 07/96	**CW7LPR**		Nickel	0.8	04
	66	B 18 U	09/95 → 12/96	**CW7LPR**		Nickel	0.8	04
	66	B 18 U	08/91 → 07/96	**CT6FMR**		Copper	0.8	04
	66	B 18 U	09/95 → 12/96	**CT6FMR**		Copper	0.8	04
460 L								
1.7	58	B 18 KD	09/89 → 08/91	**CT6FMR**		Copper	0.8	04
	64	B 18 KP	09/88 → 07/96	**CT6FMR**		Copper	0.8	04
	66	B 18 KP	09/90 → 07/96	**CT6FMR**		Copper	0.8	04
	75	B 18 EP	08/89 → 07/92	**CT6FMR**		Copper	0.8	04
	80	B 18 E	08/89 → 07/92	**CT6FMR**		Copper	0.8	04
	58	B 18 KD	09/89 → 08/91	**CW7LPR**		Nickel	0.8	04
	64	B 18 KP	09/88 → 07/96	**CW7LPR**		Nickel	0.8	04
	66	B 18 KP	09/90 → 07/96	**CW7LPR**		Nickel	0.8	04
	75	B 18 EP	08/89 → 07/92	**CW7LPR**		Nickel	0.8	04
	80	B 18 E	08/89 → 07/92	**CW7LPR**		Nickel	0.8	04
1.8	66	B 18 U	08/91 → 07/96	**CT6FMR**		Copper	0.8	04
	66	B 18 U	08/91 → 07/96	**CW7LPR**		Nickel	0.8	04
740								
2.0	76	B 200 K	09/88 → 08/90	**CW7LPR**		Nickel	0.8	04
	76	B 200 K	09/88 → 08/90	**CT6FMR**		Copper	0.8	04
	82	B 200 F	08/89 → 07/91	**CW7LPR**		Nickel	0.8	04
	82	B 200 F	08/89 → 07/91	**CT6FMR**		Copper	0.8	04
	86	B 200 E	01/87 → 08/88	**CW7LP**		Nickel	0.8	04
	86	B 200 E	01/87 → 08/88	**CT6FM**		Copper	0.8	04

	kW					CORE		QTY
VOLVO								
740								
2.0 Turbo	114	B 200 FT	09/90 → 08/91	**CW7LPR**		Nickel	0.8	04
	114	B 200 FT	09/90 → 08/91	**CT6FMR**		Copper	0.8	04
2.3	85	B 230 F	08/87 → 07/92	**CW7LPR**		Nickel	0.8	04
	85	B 230 F	08/87 → 07/92	**CT6FMR**		Copper	0.8	04
	100	B 230 FB	08/89 → 07/90	**CW7LPR**		Nickel	0.8	04
	100	B 230 FB	08/89 → 07/90	**CT6FMR**		Copper	0.8	04
	111	B 234 F	08/88 → 08/92	**CW7LPR**		Nickel	0.8	04
	111	B 234 F	08/88 → 08/92	**CT6FMR**		Copper	0.8	04
	114	B 234 F	08/88 → 07/91	**CW7LPR**		Nickel	0.8	04
	114	B 234 F	08/88 → 07/90	**CW7LPR**		Nickel	0.8	04
	114	B 234 F	08/88 → 07/91	**CT6FMR**		Copper	0.8	04
	117	B 234 F	08/87 → 07/89	**CW7LPR**		Nickel	0.8	04
	117	B 234 F	08/87 → 07/89	**CT6FMR**		Copper	0.8	04
2.3 Turbo	121	B 230 FT	08/89 → 07/90	**CW7LPR**		Nickel	0.8	04
	121	B 230 GT	08/89 → 07/90	**CW7LPR**		Nickel	0.8	04
	121	B 230 FT	08/89 → 07/90	**CT6FMR**		Copper	0.8	04
	121	B 230 GT	08/89 → 07/90	**CT6FMR**		Copper	0.8	04
	125	B 230 FT	09/89 → 08/91	**CW7LPR**		Nickel	0.8	04
	125	B 230 GT	09/89 → 08/91	**CW7LPR**		Nickel	0.8	04
	125	B 230 FT	09/89 → 08/91	**CT6FMR**		Copper	0.8	04
	125	B 230 GT	09/89 → 08/91	**CT6FMR**		Copper	0.8	04
	140	B 230 FT	08/89 → 07/90	**CW7LPR**		Nickel	0.8	04
	140	B 230 FT	08/89 → 07/90	**CT6FMR**		Copper	0.8	04
760								
2.3	121	B 230 FT	01/88 → 07/92	**CW7LPR**		Nickel	0.8	04
	121	B 230 FT	01/88 → 07/92	**CT6FMR**		Copper	0.8	04
2.3 Turbo	115	B 230 FT	09/87 → 08/90	**CW7LPR**		Nickel	0.8	04
	115	B 230 FT	09/87 → 08/90	**CT6FMR**		Copper	0.8	04
850								
2.0	93	B 5202 S	08/94 → 12/96	**YJT6KMR**		Copper	1.0	05
	105	B 5204 F	06/91 → 12/96	**7LPR**		Nickel	0.8	05
	105	B 5204 F	06/91 → 12/96	**CT6KMR**		Copper	0.8	05
2.3	106	B 5234 FS	01/96 → 10/96	**YJT6KMR**		Copper	1.0	05
2.5	103	B 5252	06/91 → 07/94	**YJT6KMR**		Copper	1.0	05
	106	B 5252 FS	08/94 → 12/96	**YJT6KMR**		Copper	1.0	05
	125	B 5254 S	08/91 → 12/96	**YJT6KMR**		Copper	1.0	05
2.5 GLE	103	B 5252	08/92 → 07/94	**YJT6KMR**		Copper	1.0	05
940								
2.0	82	B 200 F	01/92 → 07/94	**CW7LPR**		Nickel	0.8	04
	82	B 200 F	01/92 → 07/94	**CT6FMR**		Copper	0.8	04
2.0 Turbo	114	B 200 FT	08/90 → 12/94	**CW7LPR**		Nickel	0.8	04
	114	B 200 FT	01/91 → 07/95	**CW7LPR**		Nickel	0.8	04
	114	B 200 FT	08/90 → 12/94	**CT6FMR**		Copper	0.8	04

	kW					CORE		QTY
VOLVO								
940								
2.3	85	B 230 FD	08/92 → 07/94	**CW7LPR**		Nickel	0.8	04
	85	B 230 FD	08/92 → 07/94	**CT6FMR**		Copper	0.8	04
	96	B 230 G	08/90 → 12/94	**CW7LPR**		Nickel	0.8	04
	96	B 230 FB	08/90 → 12/94	**CW7LPR**		Nickel	0.8	04
	96	B 230 G	08/90 → 12/94	**CT6FMR**		Copper	0.8	04
	96	B 230 FB	08/90 → 12/94	**CT6FMR**		Copper	0.8	04
	114	B 234 G	08/90 → 07/91	**CW7LPR**		Nickel	0.8	04
	114	B 234 F	08/90 → 07/91	**CW7LPR**		Nickel	0.8	04
	114	B 234 G	08/90 → 07/91	**CT6FMR**		Copper	0.8	04
	114	B 234 F	08/90 → 07/91	**CT6FMR**		Copper	0.8	04
	118	B 230 FT	09/90 → 09/93	**CW7LPR**		Nickel	0.8	04
	118	B 230 FT	09/90 → 09/93	**CT6FMR**		Copper	0.8	04
2.3 Turbo	121	B 230 FT	08/90 → 07/94	**CW7LPR**		Nickel	0.8	04
	121	B 230 FT	08/90 → 07/94	**CT6FMR**		Copper	0.8	04
	140	B 230 FT+	08/91 → 07/93	**CW7LPR**		Nickel	0.8	04
	140	B 230 FT+	08/91 → 07/93	**CT6FMR**		Copper	0.8	04
960								
2.0	140	B 204 FT	08/90 → 09/93	**CW7LPR**		Nickel	0.8	04
	140	B 204 FT	08/90 → 09/93	**CT6FMR**		Copper	0.8	04
2.3 Turbo	121	B 230 FT	09/90 → 08/93	**CW7LPR**		Nickel	0.8	04
	121	B 230 FT	09/90 → 08/93	**CT6FMR**		Copper	0.8	04
2.9	150	B 6304 FS	08/90 → 07/94	**CT6KMMR**		Copper	0.8	06
	150	B 6304 G	08/90 → 07/94	**CT6KMMR**		Copper	0.8	06
	150	B 6304 F	08/90 → 07/94	**CT6KMMR**		Copper	0.8	06
940 II								
2.3	85	B 230 FD	08/94 → 07/95	**CT6FMR**		Copper	0.8	04
	96	B 230 FB	08/94 → 10/98	**CT6FMR**		Copper	0.8	04
	85	B 230 FD	08/94 → 07/95	**CW7LPR**		Nickel	0.8	04
	96	B 230 FB	08/94 → 10/98	**CW7LPR**		Nickel	0.8	04
2.3 T	99	B 230 FK	01/95 → 10/98	**CW7LPR**		Nickel	0.8	04
	99	B 230 FK	01/95 → 10/98	**CT6FMR**		Copper	0.8	04
2.3 ti	99	B 230 FK	01/95 → 10/98	**CW7LPR**		Nickel	0.8	04
	99	B 230 FK	01/95 → 10/98	**CT6FMR**		Copper	0.8	04
2.3 Turbo	121	B 230 FT	08/94 → 10/98	**CW7LPR**		Nickel	0.8	04
	126	B 230 FT	01/95 → 12/98	**CW7LPR**		Nickel	0.8	04
	126	B 230 FT	01/95 → 12/98	**CT6FMR**		Copper	0.8	04
960 II								
2.5	125	B 6254 S	07/94 → 12/96	**CT6KMMR**		Copper	0.8	06
2.9	150	B 6304 S	07/94 → 12/96	**D6KMR**		Copper	0.9	06
C30								
2.4 i	125	B 5244 S4	10/06 → 12/12	**CT6KHMR11**		Copper	1.1	05
C70 I								
2.5	125	B 5254 S	06/98 → 10/05	**YJT6KMR**	→ 12/99	Copper	1.0	05

	kW					CORE		QTY
VOLVO								
C70 II								
2.4	103	B 5244 S5	03/06 →	**CT6KHMR11**	→ 04/10	Copper	1.1	05
2.4 i	125	B 5244 S4	03/06 →	**CT6KHMR11**	→ 04/10	Copper	1.1	05
S40 II								
2.4	103	B 5244 S5	01/04 →	**CT6KHMR11**		Copper	1.1	05
	125	B 5244 S4	01/04 →	**CT6KHMR11**		Copper	1.1	05
2.4 AWD	125	B 5244 S4	08/06 →	**CT6KHMR11**		Copper	1.1	05
S60 I								
2.4	103	B 5244 S2	11/00 → 04/10	**YJT6KMR**		Copper	1.0	05
	125	B 5244 S	11/00 → 04/10	**YJT6KMR**		Copper	1.0	05
2.4 Bifuel (LPG)	103	B 5244 SG2	06/02 → 04/10	**YJT6KMR**		Copper	1.0	05
S70								
2.0	93	B 5202 FS	01/97 → 11/00	**YJT6KMR**	→ 04/99	Copper	1.0	05
	93	B 5202 S	01/97 → 11/00	**YJT6KMR**	→ 04/99	Copper	1.0	05
2.4	103	B 5244 S2	08/99 → 11/00	**YJT6KMR**		Copper	1.0	05
	103	B 5244 SG	08/99 → 11/00	**YJT6KMR**		Copper	1.0	05
	125	B 5244 S	01/97 → 11/00	**YJT6KMR**		Copper	1.0	05
	125	B 5254 S	01/97 → 11/00	**YJT6KMR**		Copper	1.0	05
2.4 AWD	103	B 5244 S2	04/99 → 09/00	**YJT6KMR**		Copper	1.0	05
	121	B 5254 S	10/98 → 05/99	**YJT6KMR**		Copper	1.0	05
	125	B 5244 S	04/99 → 09/00	**YJT6KMR**		Copper	1.0	05
2.4 Blu-Fuel	103	B 5244 SG	07/97 → 09/00	**YJT6KMR**		Copper	1.0	05
	103	B 5244 S2	07/97 → 09/00	**YJT6KMR**		Copper	1.0	05
2.5	106	B 5252 FS	01/97 → 11/00	**YJT6KMR**	→ 04/99	Copper	1.0	05
	121	B 5254 S	06/98 → 11/00	**YJT6KMR**	→ 04/99	Copper	1.0	05
2.5 Bifuel	103	B 5244 SG	07/99 → 11/00	**YJT6KMR**		Copper	1.0	05
	106	GB 5252 S	10/98 → 11/00	**YJT6KMR**	→ 04/99	Copper	1.0	05
S80 I								
2.0	120	B 5204 T4	06/98 → 07/06	**YJT6KMR**	→ 12/00	Copper	1.0	05
2.0 T	132	B 5204 T5	12/99 → 07/06	**YJT6KMR**		Copper	1.0	05
	166	B 5204 T3	06/98 → 07/06	**YJT6KMR**	→ 12/00	Copper	1.0	05
2.4	103	B 5244 S2	01/99 → 07/06	**YJT6KMR**		Copper	1.0	05
	125	B 5244 S	01/99 → 07/06	**YJT6KMR**		Copper	1.0	05
2.4 Bifuel (CNG)	103	B 5244 SG2	09/01 → 07/06	**YJT6KMR**		Copper	1.0	05
2.4 Bifuel (LPG)	103	B 5244 SG	09/01 → 07/06	**YJT6KMR**		Copper	1.0	05
2.4 T	147	B 5244 T3	06/00 → 07/06	**YJT6KMR**	→ 12/03	Copper	1.0	05
2.5 T	154	B 5254 T2	03/03 → 07/06	**YJT6KMR**		Copper	1.0	05
2.5 T AWD	154	B 5254 T2	07/03 → 07/06	**YJT6KMR**		Copper	1.0	05
2.8 T6	200	B 6284 T	05/98 → 07/06	**YJT6KMR**	→ 12/99	Copper	1.0	06
2.9	144	B 6294 S2	06/01 → 07/06	**YJT6KMR**	→ 05/05	Copper	1.0	06
	147	B 6294 S	03/99 → 07/06	**YJT6KMR**	→ 05/01	Copper	1.0	06
	150	B 6304 S3	05/98 → 07/06	**YJT6KMR**	→ 12/99	Copper	1.0	06
3.0	144	B 6294 S2	06/01 → 07/06	**YJT6KMR**	→ 05/05	Copper	1.0	06
3.0 T6	200	B 6294 T	06/01 → 07/06	**YJT6KMR**		Copper	1.0	06

	kW					CORE		QTY
VOLVO								
S90								
2.9	132	B 6304 S2	01/97 → 05/98	**7LPR**		Nickel	0.8	06
	132	B 6304 S2	01/97 → 05/98	**CT6KMR**		Copper	0.8	06
	150	B 6304 G	01/97 → 05/98	**7LPR**		Nickel	0.8	06
	150	B 6304 G	01/97 → 05/98	**CT6KMR**		Copper	0.8	06
V50								
2.4	103	B 5244 S5	04/04 →	**CT6KHMR11**		Copper	1.1	05
	125	B 5244 S4	04/04 →	**CT6KHMR11**		Copper	1.1	05
2.4 AWD	125	B 5244 S4	08/06 →	**CT6KHMR11**		Copper	1.1	05
V70								
2.0	93	B 5202 S	01/97 → 03/00	**D6KMR**		Copper	0.9	05
2.4	103	B 5244 SG2	08/99 → 05/00	**YJT6KMR**		Copper	1.0	05
	103	B 5244 S2	08/99 → 05/00	**YJT6KMR**		Copper	1.0	05
	125	B 5244 S	01/97 → 05/00	**YJT6KMR**		Copper	1.0	05
	125	B 5254 S	01/97 → 05/00	**YJT6KMR**		Copper	1.0	05
2.4 Bifuel	103	B 5244 SG	08/99 → 03/00	**YJT6KMR**		Copper	1.0	05
2.5	106	B 5252 FS	01/97 → 03/00	**D6KMR**		Copper	0.9	05
	121	B 5254 S	06/98 → 03/00	**D6KMR**		Copper	0.9	05
2.5 Bifuel	106	GB 5252 S	10/98 → 08/99	**YJT6KMR**		Copper	1.0	05
V70 II								
2.4	103	B 5244 S2	03/00 → 08/07	**YJT6KMR**		Copper	1.0	05
	125	B 5244 S	03/00 → 08/07	**YJT6KMR**		Copper	1.0	05
2.4 Bifuel (CNG)	103	B 5244 SG	09/01 → 08/07	**YJT6KMR**		Copper	1.0	05
2.4 Bifuel (LPG)	103	B 5244 SG2	09/01 → 08/07	**YJT6KMR**		Copper	1.0	05
V90								
2.9	132	B 6304 S2	01/97 → 12/98	**7LPR**		Nickel	0.8	06
	150	B 6304 G	01/97 → 12/98	**7LPR**		Nickel	0.8	06
V90 Station wagon								
2.5	125	B 6254 FS	11/96 → 10/98	**YJT6KMR**		Copper	1.0	06
	132	B 6244 FS	11/96 → 10/97	**YJT6KMR**		Copper	1.0	06
2.9	132	B 6304 S2	01/97 → 12/98	**CT6KMR**		Copper	0.8	06
	150	B 6304 G	01/97 → 12/98	**CT6KMR**		Copper	0.8	06

Applicazione per codice
Buyers guide
Zuordnung nach Bestellnummer
Affectations par références
Aplicación por referencia
Aplicação por código
Εφαρμογές ανά κωδικό
Zastosowanie dla kodu
Применение по коду
Koda göre uygulama

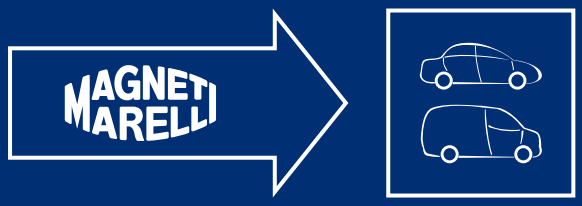

7LPR

Hexagon Size	16
Thread Size	M14×1.25
Gap (mm)	0.8
Thread Reach	19.0
Heat Range	7
Type	Resistor
Version	1 Mass Electrode
Seat	Flat
Core	Nickel

BERU

0001330780	0002335707	0002335717	0002336724
0002340702	14 F-8 DUR	14 FR-7 DU2	14FR6DU
14FR7DU	14FR7DUW	Z15	Z193
Z227	Z24	Z247	

BOSCH

8	13	0 242 235 640	0 242 235 666
0 242 235 797	0 242 240 577	0 242 240 593	FR 6 DC
FR 6 DC 2	FR 7 DC	FR 7 DE 2	FR7DE

CHAMPION

9GYSSR	OE002/R04	OE002/T10	OE033/R04
OE033/T10	OE034/R04	OE034/T10	OE102/T10
OE119/T10	OE127/T10	RC10YCC	RC281YC
RC87YC	RC87YCC	RC87YCL	RC8YC
RC8YCC	RC8YCL	RC8YLC	RC9YC
RC9YCC			

DENSO

K20PR-U

NGK

3783	4619	4856	4876
5375	6717	6962	7373
94067	BKR6E	BKR6EN	BKR6ES
BKR6EZ	FR5	VL28	VL38
V-Line 28	V-Line 38		

		kW				QTY
AUDI						
A3 (8P1)	2.0 FSI	110	AXW	05/03 → 06/08		04
		110	BLY	05/03 → 06/08		04
		110	BLX	05/03 → 06/08		04
		110	BVZ	05/03 → 06/08		04
		110	BVY	05/03 → 06/08		04
		110	BLR	05/03 → 06/08		04
		110	BMB	05/03 → 06/08		04
AUTOBIANCHI						
Y10	1.0 Cat	33	156A2.246	10/87 → 10/95	01/89 → 09/92	04
	1.1	42	156C.000	06/89 → 10/95	→ 12/94	04
	1.1 4WD	42	156C.000	06/89 → 10/95	→ 09/92	04
	1.1 i.e. Cat	42	156C.046	09/90 → 10/95		04
CHRYSLER						
CARAVAN III	2.0 i	98	C00	01/95 → 03/01		04
CIRRUS	2.0 LX	96	ECB	05/94 → 09/97		04
		98	ECB	10/97 → 09/00		04
GRAND VOYAGER III	2.0 i	98	C00	01/95 → 03/01		04

MAGNETI MARELLI

7LPR

		kW				QTY
CHRYSLER						
NEON	1.8 16V	85	EBD	09/97 → 08/99		04
	2.0 16V	98	420H	05/94 → 08/99		04
		107	ECC	06/94 → 08/99		04
		109	420T	04/96 → 08/99		04
NEON II	1.6	85	EJD	11/01 → 12/06	→ 09/05	04
	2.0 16V	97	ECB	10/02 → 12/06		04
		98	ECB	08/99 → 12/06		04
		98	420H	08/99 → 12/06		04
	2.0 16V R/T	110	ECH	10/01 → 12/06	→ 09/05	04
STRATUS	2.0 16V	98	ECB	12/95 → 04/01		04
	2.0 LE	96	C00	12/95 → 04/01		04
		96	420X	06/96 → 04/01		04
VOYAGER III	2.0 i	98	C00	01/95 → 03/01		04
CITROËN						
AX	11 Cat	40	HAZ (TU1CP)	09/88 → 12/89		04
	14	51	K1G	01/89 → 12/91		04
		55	KDZ (TU3M/Z)	04/87 → 04/97		04
		55	KDY (TU3FM)	04/87 → 04/97		04
		55	KDY (TU3M)	04/87 → 04/97		04
		55	KDX (TU3M/Z)	04/87 → 04/97		04
BERLINGO (MF)	1.4	53	KFW (TU3JP)	11/02 → 10/05		04
	1.4 bivalent	48	KFW (TU3JP)	11/02 →		04
	1.4 i (MFKFX, MFKFW)	55	KFW (TU3JP)	07/96 →		04
		55	KFX (TU3JP)	07/96 →		04
	1.4 i bivalent (MFKFW)	55	KFW (TU3JP)	04/03 →		04
C2	1.1	44	HFX (TU1JP)	09/03 →	→ 01/10	04
	1.4	54	KFV (TU3JP)	09/03 →	→ 04/05	04
		55	KFV (TU3JP)	10/06 →	→ 01/10	04
C3 I	1.1 i	44	HFX (TU1A)	02/02 →	→ 10/09	04
	1.4 Bioflex	60	KFV (TU3JP)	01/09 →		04
	1.4 i	54	KFV (TU3A)	02/02 →	→ 10/09	04
	1.4 i Bivalent	54	KFV (TU3JP)	02/02 →	→ 10/09	04
	1.4 i GLX	54	KFV (TU3A)	02/02 →	→ 10/09	04
C3 II	1.1	44	HFX (TU1JP)	11/09 →		04
	1.4	54	KFT (TU3A)	11/09 →		04
C3 Pluriel	1.4	54	KFV (TU3JP)	05/03 →	→ 01/11	04
	1.4 Hybrid	54	KFV (TU3JP)	05/05 →	→ 01/11	04
C15	1.1	40	HDZ (TU1M)	10/88 → 10/92		04
		44	HDZ (TU1M)	08/88 → 07/96	09/89 →	04
	1.3	47	G1A	07/87 → 05/88		04
	1.4	55	KDY (TU3M)	05/91 → 07/96		04
CHANSON	1.4 VTS	55	KFW (TU3JP)	05/96 → 06/03		04
		55	KFX (TU3JP)	05/96 → 06/03		04
	1.6 VTS	72	NFT (TU5JP)	09/00 → 09/03		04

7LPR

		kW				QTY
CITROËN						
EVASION	2.0 Turbo C.T.	108	RGX (XU10J2TE)	06/94 → 07/02		04
	2.0 VSX Turbo	108	RGX (XU10J2TE)	06/94 → 07/02		04
JUMPER	2.0	81	XU10J2	04/02 →	→ 06/06	04
	2.0 4x4	80	RFW (XU10J2U)	10/96 → 01/02		04
	2.0 bivalent	81	XU10J2	02/03 →	→ 06/06	04
NEMO Station wagon	1.4	54	KFV (TU3A)	04/09 →		04
		54	KFT (TU3A)	04/09 →		04
RELAY	2.0	81	XU10J2	04/02 →	→ 06/06	04
	2.0 4x4	80	RFW (XU10J2U)	10/96 → 01/02		04
	2.0 bivalent	81	XU10J2	02/03 →	→ 06/06	04
SAXO	1.4 VTS	55	KFW (TU3JP)	05/96 → 06/03		04
		55	KFX (TU3JP)	05/96 → 06/03		04
	1.6 VTS	72	NFT (TU5JP)	09/00 → 09/03		04
SYNERGIE	2.0 Turbo C.T.	108	RGX (XU10J2TE)	06/94 → 07/02		04
	2.0 VSX Turbo	108	RGX (XU10J2TE)	06/94 → 07/02		04
XANTIA (X1)	2.0 i 16V	110	RFT (XU10J4/Z)	06/94 → 01/98		04
		112	RFY (XU10J4/Z)	03/93 → 01/98		04
	2.0 Turbo	108	RGX (XU10J2TE)	06/95 → 01/98		04
XANTIA (X2)	1.6 i SX	65	BFZ (XU5JP)	01/98 → 03/01		04
	1.8 i	66	LFX (XU7JB)	01/98 → 04/03		04
	1.8 i 16V	81	LFY (XU7JP4)	01/98 → 04/03		04
	2.0 i	89	RFX (XU10J2C)	01/98 → 04/03		04
	2.0 i 16V	97	RFV (XU10J4R)	01/98 → 04/03		04
	2.0 Turbo	108	RGX (XU10J2TE)	01/98 → 04/03		04
XM	2.0 Turbo	108	RGX (XU10J2TE)	05/94 → 10/00		04
XSARA	1.4 i	55	KFW (TU3JP)	04/97 → 03/05		04
		55	KFX (TU3JP)	04/97 → 03/05		04
	2.0 16V	120	RFS (XU10J4RS)	04/97 → 09/00		04
ZX (N2)	1.8	76	LFZ (XU7JP)	07/94 → 10/97		04
	1.9	93	D6E (XU9JA)	03/91 → 06/97	→ 08/92	04
	2.0 i 16V	112	RFT (XU10J4/Z)	07/92 → 10/94		04
		114	RFT (XU10J4/Z)	07/92 → 10/97		04
		114	RFY (XU10J4/Z)	07/92 → 10/97		04
DACIA						
DUSTER	1.6 16V	77	K4M 696	04/10 →		04
		77	K4M 690	04/10 →		04
	1.6 16V 4x4	77	K4M 606	06/10 →		04
LODGY	1.6	61	K7M 812	03/12 →		04
LOGAN	1.4 (LSOA, LSOC, LSOE, LSOG)	55	K7J 710	09/04 →		04
	1.6 (LSOB, LSOD, LSOF, LSOH)	64	K7M 710	09/04 →		04
	1.6 16V (LS0M)	77	K4M 696	02/06 →		04
	1.6 16V Flexifuel	77	K4M 696	07/10 →		04
	1.6 Bifuel	62	K7M 718	05/10 →		04

MAGNETI MARELLI

7LPR

		kW				QTY
DACIA						
LOGAN EXPRESS	1.4	55	K7J 710	03/09 →		04
	1.6	64	K7M 710	03/09 →		04
LOGAN MCV	1.4	55	K7J 710	02/07 →		04
	1.6	64	K7M 710	02/07 →		04
	1.6 16V	77	K4M 696	02/07 →		04
	1.6 16V Hi-Flex	77	K4M 690	11/09 →		04
LOGAN Pick-up	1.4	55	K7J 710	01/09 →		04
	1.6	64	K7M 710	03/08 →		04
	1.6 Bifuel	62	K7M 800	05/10 →		04
	1.6 MPI 85	62	K7M 800	05/10 →		04
SANDERO	1.6 16V Bifuel	77	K4M 690	01/11 →		04
		77	K4M 696	01/11 →		04
		77	K4M 694	01/11 →		04
SOLENZA	1.4 (B41A, B41B, B41C)	55	E7J 262	02/03 →		04
DODGE						
NEON	2.0 Highline	98	ECB	01/94 → 09/99		04
NEON II	2.0 16V	98	ECB	08/99 →		04
STRATUS		98	ECB	12/95 → 04/01		04
DR						
DR 1	1.0	50	SQR472F	03/10 →		04
	1.0 LPG	50	SQR472F	03/10 →		04
	1.3 Bifuel	61	SQR473	03/10 →		04
DR 2	1.3	61	SQR473	09/10 →		04
	1.3 LPG	61	SQR473	09/10 →		04
DR 5	1.6	80	SQR481F	01/11 →		04
	1.6	87	SQR481F	01/11 →		04
	1.6 LPG	80	SQR481F	01/11 →		04
	1.8	97	SQR481FC	01/11 →		04
	2.0	94	SQR484F	01/11 →		04
		102	SQR484F	01/11 →		04
	2.0 LPG	94	SQR484F	01/11 →		04
FIAT						
DUCATO (244_)	2.0	81	RFL	04/02 →	→ 06/06	04
	2.0 4x4	81	RFL	05/02 → 07/06		04
	2.0 Bipower	81	RFL	11/02 →	→ 06/06	04
FIORINO (225_)	1.4	54	KFT	11/07 →		04
		54	KFV	11/07 →		04
PALIO (178_)	1.2 (178DX.G1A)	54	178 B5.000	04/96 → 02/01		04
PUNTO (176_)	55 1.1	40	176 A6.000	09/93 → 09/99		04
		40	176 B2.000	09/93 → 09/99		04
QUBO (225_)	1.4	54	KFV	02/08 →		04
STILO (192_)	1.8 16V (192_XC1A)	98	192 A4.000	10/01 → 11/06		04
ULYSSE (220_)	1.8 (220.BB5)	73	LFW	05/97 → 08/02		04

7LPR

		kW				QTY
FORD						
FIESTA III	1.4	54	FUG	03/89 → 12/95		04
		54	FUH	07/90 → 12/93		04
SCORPIO I	2.0 i	92	N9B	05/89 → 02/92		04
TRANSIT	2.0 (EBL, EBS, ECL, EDS, EDL, EGL, ESS, ESL, EUS)	84	NSF	09/95 → 03/00		04
	2.0 CNG	84	NSH	06/94 → 03/00		04
TRANSIT TOURNEO	2.0	84	NSH	11/94 → 12/00		04
HYUNDAI						
ACCENT II	1.6	77	G4ED-G	12/02 → 11/05		04
ACCENT III	1.4 GL	71	G4EE	11/05 → 11/10		04
ACCENT IV	1.4 GL	71	G4EE	11/05 → 11/10		04
AVEGA III	1.4 GL	71	G4EE	11/05 → 11/10		04
EXCEL II	1.6	77	G4ED-G	12/02 → 11/05		04
S COUPE	1.5 i Turbo	85	G4EK-TC	04/91 → 05/96		04
VERNA II	1.6	77	G4ED-G	12/02 → 11/05		04
VERNA III	1.4 GL	71	G4EE	11/05 → 11/10		04
INNOCENTI						
ELBA (146)	1.4 i.e. (146EN, 146EQ)	49	146 C5.000	09/94 → 12/96		04
		49	146 D5.000	09/94 → 12/96		04
JAGUAR						
XJ	6 4.0	163	9EPCNA	09/89 → 11/94		06
KIA						
CARENS I	1.8 i	81	T8	11/00 → 07/02		04
CARENS II	1.8	93	TB	07/02 →	→ 05/06	04
CERATO	1.8	85	T8	10/01 → 07/04		04
RIO	1.5	70	A5D	09/02 → 02/05		04
	1.5 16V	72	A5D	09/00 → 02/05		04
SEPHIA	1.8 i 16V	81	T8	10/97 → 03/01	→ 08/98	04
SHUMA	1.8 i 16V	81	T8	10/97 → 03/01	→ 08/98	04
SHUMA II	1.8	81	T8	05/01 → 06/04		04
SPECTRA II	1.8	84	T8	04/03 → 08/04		04
LADA						
GRANTA	1.6	72	VAZ-21126	10/11 →		04
LARGUS	1.6	62	VAZ-K7M	03/12 →		04
VEGA	2.0 i	110	C 20 XE	08/96 →		04
LANCIA						
Y (840_)	1.1 (840AE)	40	176 B2.000	11/95 → 09/03	04/97 →	04
ZETA (22_)	2.0 16V (220AL5)	97	RFV (XU10J4R)	05/98 → 07/00		04
LAND ROVER						
DISCOVERY	2.0 16 V 4x4	99	20 T4H	06/89 → 10/98		04

MAGNETI MARELLI

7LPR

		kW				QTY
MAZDA						
323 C IV	1.8 16V	103	BP22	09/89 → 03/93		04
626 III	1.8	65	F8 (12V)	11/87 → 05/92		04
ETUDE IV	1.8 16V	103	BP31	09/89 → 03/93		04
		103	BP22	09/89 → 03/93		04
FAMILIA IV	1.8 16V	103	BP22	09/89 → 03/93		04
		103	BP31	09/89 → 03/93		04
TELSTAR III	1.8	65	F8 (12V)	11/87 → 05/92		04
MERCEDES-BENZ						
SL (R129)	500 SL (129.066)	240	M 119.960	09/89 → 08/92		08
		240	M 119.972	09/89 → 08/92		08
MITSUBISHI						
MONTERO CLASSIC	3.0 ZR	132	6G72 (DOHC 24V)	08/03 →		06
MONTERO III	3.0 (V73W)	125	6G72 (SOHC 24V)	10/01 → 12/06		06
NIMBUS	1.8 (N31W)	90	4G93 (SOHC 16V)	10/91 → 10/98		04
	1.8 4WD (N41W)	90	4G93 (SOHC 16V)	10/91 → 10/98		04
PAJERO CLASSIC	3.0 ZR	132	6G72 (DOHC 24V)	08/03 →		06
PAJERO III	3.0 (V73W)	125	6G72 (SOHC 24V)	10/01 → 12/06		06
RVR	1.8 (N11W)	85	4G93 (SOHC 16V)	06/96 → 08/99		04
SHOGUN III	3.0 (V73W)	125	6G72 (SOHC 24V)	10/01 → 12/06		06
SPACE RUNNER	1.8 (N11W)	85	4G93 (SOHC 16V)	06/96 → 08/99		04
SPACE WAGON	1.8 (N31W)	90	4G93 (SOHC 16V)	10/91 → 10/98		04
	1.8 4WD (N41W)	90	4G93 (SOHC 16V)	10/91 → 10/98		04
NISSAN						
ALMERA I	1.6	73	GA16DE	09/95 → 03/00		04
PRIMERA	1.6	66	GA16DS	06/90 → 01/96		04
		71	GA16DS	06/90 → 01/96		04
		75	GA16DE	06/93 → 01/96		04
	2.0 GT	110	SR20DE	06/90 → 01/96		04
PULSAR I	1.6	73	GA16DE	09/95 → 03/00		04
PULSAR III	1.4 i	55	GA14DS	10/90 → 05/95		04
		55	GA14DE	10/90 → 05/95		04
	1.6 i	66	GA16DE	10/90 → 05/95		04
		66	GA16DEL	10/90 → 05/95		04
		66	GA16DS	10/90 → 05/95		04
	1.6 i 16V 4WD	66	GA16DS	10/90 → 05/95		04
PULSAR V	1.4 i	55	GA14DS	10/90 → 05/95		04
		55	GA14DE	10/90 → 05/95		04
	1.6 i1.6 i	66	GA16DEL	10/90 → 05/95		04
		66	GA16DE	10/90 → 05/95		04
		66	GA16DS	10/90 → 05/95		04
PULSAR VI	1.6	73	GA16DE	09/95 → 03/00		04

7LPR

		kW				QTY
NISSAN						
SABRE III	1.4 i	55	GA14DS	10/90 → 05/95		04
		55	GA14DE	10/90 → 05/95		04
	1.6 i	66	GA16DE	10/90 → 05/95		04
		66	GA16DEL	10/90 → 05/95		04
		66	GA16DS	10/90 → 05/95		04
SENTRA III	1.4 i	55	GA14DS	10/90 → 05/95		04
		55	GA14DE	10/90 → 05/95		04
	1.6 i	66	GA16DS	10/90 → 05/95		04
		66	GA16DEL	10/90 → 05/95		04
		66	GA16DE	10/90 → 05/95		04
	1.6 i 16V 4WD	66	GA16DS	10/90 → 05/95		04
SUNNY III	1.4 i	55	GA14DS	10/90 → 05/95		04
		55	GA14DE	10/90 → 05/95		04
	1.6 i	66	GA16DEL	10/90 → 05/95		04
		66	GA16DE	10/90 → 05/95		04
		66	GA16DS	10/90 → 05/95		04
	1.6 i 16V 4WD	66	GA16DS	10/90 → 05/95		04
TSUBAME III	1.6 i	66	GA16DE	06/91 → 03/00		04
		66	GA16DS	06/91 → 03/00		04
	1.6 i 16V 4x4	75	GA16DE	10/92 → 03/00		04
OPEL						
KADETT E	2.0 GSI 16V	110	20 XEJ	03/88 → 08/91		04
		115	20 XE	12/87 → 08/91		04
	2.0 GSI 16V Cat	110	C 20 XE	03/88 → 08/91		04
PEUGEOT						
205	1.4	62	K2B (TU3S)	08/87 → 06/94	→ 07/88	04
	1.6	85	B6D (XU5JA)	08/87 → 07/92		04
	1.9 CTi	74	DFZ (XU9J1)	08/87 → 07/90		04
		92	DKZ (XU9JAZ)	08/90 → 07/92		04
205 II	1.4	63	Y2/K	06/87 → 12/89	→ 07/87	04
206	1.1	40	HFY (TU1JP)	08/98 → 07/00		04
	1.1 i	44	HFX (TU1JP)	09/98 →		04
		44	HFZ (TU1JP)	09/98 →		04
	1.4 i	55	KFW (TU3JP)	09/98 →		04
		55	KFX (TU3JP)	09/98 →		04
	1.4 LPG	55	KFV (TU3JP)	05/06 → 09/07		04
207	1.4	53	KFV (TU3A)	02/06 →		04
		54	KFT (TU3A)	12/07 →		04
		54	KFV (TU3A)	12/07 →		04
		55	KFV (TU3A)	08/08 →		04
		55	KFW (TU3A)	08/08 →		04
	1.4 Bioflex	60	KFW (TU3JP)	08/08 →		04
	1.4 XR Sport Bioflex	60	KFW (TU3JP)	08/08 →		04

MAGNETI MARELLI

7LPR

		kW				QTY
PEUGEOT						
306	1.6	66	NFZ (TU5JP)	07/00 → 05/01		04
		72	NFT (TU5JP)	10/00 → 05/01		04
	2.0 S16	120	RFS (XU10J4RS)	03/96 → 05/01		04
307	1.4	55	KFW (TU3JP)	08/00 →	09/01 → 06/05	04
309 II	1.4	55	KDY (TU3M)	07/89 → 12/93		04
		55	KDZ (TU3M)	07/89 → 12/93		04
405	1.6	68	B2A (XU52C/K)	05/88 → 07/92		04
	1.9 4x4	88	DKZ (XU9JAZ)	07/90 → 07/92		04
	2.0 16V	97	RFV (XU10J4R)	11/95 → 05/04		04
		99	RFR (DEW10J4)	01/99 → 08/00		04
406	2.0 16V	97	RFV (XU10J4R)	10/96 → 10/04		04
		99	RFR (DEW10J4)	01/99 → 10/00		04
1007	1.4	54	KFV (TU3A)	04/05 →	→ 07/10	04
		54	KFV (TU3JP)	04/05 →	→ 07/10	04
BIPPER	1.4	54	KFV (TU3A)	02/08 →		04
BOXER	2.0	81	RFL (XU10J2U)	04/02 →	→ 06/06	04
		81	RFL (XU10J2U)	12/01 → 04/02		04
PARTNER	1.4	54	KFW (TU3JP)	11/02 → 10/06		04
		54	KFV (TU3A)	11/02 → 10/06		04
	1.4 BiFuel	55	KFW (TU3JP)	04/03 →	→ 05/08	04
RANCH	1.4	54	KFV (TU3A)	11/02 → 10/06		04
	1.4 BiFuel	55	KFW (TU3JP)	04/03 →	→ 05/08	04
RENAULT						
19 II	1.4	59	E7J 706	10/94 → 11/95		04
CLIO	1.4	57	E6J 760	05/90 → 02/98		04
		57	E6J 713	05/90 → 02/98		04
		57	E6J 712	05/90 → 02/98		04
	1.4 16V	72	K4J 780	02/10 →		04
	1.6 16V	79	K4M 740	04/02 →	→ 09/08	04
	1.6 16V (KR0B)	82	K4M 800	02/08 →		04
		82	K4M 801	02/08 →		04
CLIO II	1.4 16V (B/CB0P)	72	K4J 711	08/00 →		04
		72	K4J 710	08/00 →		04
		72	K4J 713	08/00 →		04
		72	K4J 712	08/00 →		04
CLIO III	1.4 16V	72	K4J 780	06/05 →		04
	1.6 16V (BR05, BR0B, BR0Y, BR15, BR1J, BR1M, BR1Y, CR0B...)	82	K4M 801	06/05 →		04
		82	K4M 800	06/05 →		04
	1.6 16V (BR09, BR0T, CR09, CR0T)	65	K4M 804	06/05 →	→ 04/09	04
ESPACE III	2.0	102	F4R 701	09/01 → 10/02		04
		102	F4R 700	09/01 → 10/02		04
	2.0 16V (JE0N, JE0L, JE02)	103	F4R 701	10/98 → 10/02		04
		103	F4R 700	10/98 → 10/02		04

7LPR

		kW				QTY
RENAULT						
EXPRESS	1.4	59	E7J 773	05/95 → 08/97		04
FLUENCE	1.6 16V (L301, L30F, L30P, L30R)	81	K4M 838	02/10 →		04
		81	K4M 839	02/10 →		04
GRAN TOUR III	1.6 16V (KZ0H)	74	K4M 848	05/09 →		04
	1.6 16V (KZ0U, KZ1B, KZ1U)	81	K4M 858	05/09 →		04
GRAND SCÉNIC II	1.6	83	K4M 782	04/04 →	→ 07/08	04
		83	K4M 761	04/04 →	→ 07/08	04
	2.0	99	F4R 771	04/04 →	→ 04/09	04
		99	F4R 770	04/04 →	→ 04/09	04
		120	F4R 776	04/04 →	→ 07/08	04
GRAND SCÉNIC III	1.6 16V (JZ0U)	81	K4M 858	02/09 →		04
KANGOO	1.6 16V	70	K4M 753	06/01 →		04
		70	K4M 750	06/01 →		04
		70	K4M 706	06/01 →		04
		70	K4M 752	06/01 →		04
	1.6 16V 4x4 (KC0P, KC0S, KC0L)	70	K4M 752	10/01 →		04
		70	K4M 750	10/01 →		04
		70	K4M 753	10/01 →		04
	1.6 16V bivalent	60	K4M 850	06/05 →	→ 12/07	04
LAGUNA I	2.0 (556A)	102	F4R 780	09/99 → 02/01		04
	2.0 16V (556A/B)	103	F4R 780	09/99 → 03/01		04
	2.0 RXE (556A)	102	F4R 780	09/99 → 02/01		04
LAGUNA II	1.6 16V (BG0A, BG0L)	79	K4M 714	03/01 →	→ 09/07	04
		79	K4M 710	03/01 →	→ 09/07	04
	1.6 16V (BG1G, BG1H)	82	K4M 716	02/05 →	→ 09/07	04
	1.8 16V (BG04, BG0B, BG0C, BG0V)	86	F4P 774	03/01 →	→ 02/05	04
		86	F4P 770	03/01 →	→ 02/05	04
	1.8 16V (BG06, BG0J, BG0M)	85	F4P 775	03/01 →	→ 09/07	04
		85	F4P 774	03/01 →	→ 09/07	04
		85	F4P 773	03/01 →	→ 09/07	04
		85	F4P 771	03/01 →	→ 09/07	04
		85	F4P 770	03/01 →	→ 09/07	04
	1.8 16V (BG0B, BG0C, BG0J, BG0M, BG0V)	89	F4P 772	03/01 →	→ 09/07	04
		89	F4P 770	03/01 →	→ 09/07	04
	1.8 16V (BG0B, BG0M)	88	F4P 773	03/01 →	→ 09/07	04
		88	F4P 770	03/01 →	→ 09/07	04
	2.0 16V	98	F4R 714	08/02 →	→ 09/07	04
		125	F4R 787	01/05 →	→ 09/07	04
		125	F4R 784	01/05 →	→ 09/07	04
		125	F4R 786	01/05 →	→ 09/07	04
	2.0 16V (BG00, BG0K, BG0P, BG0W)	99	F4R 713	08/02 →		04
		99	F4R 712	08/02 →		04
		99	F4R 715	08/02 →		04
		99	F4R 714	08/02 →		04

MAGNETI MARELLI

7LPR

		kW				QTY
RENAULT						
LAGUNA III	1.6 16V (BT04, BT0D, BT0U)	81	K4M 824	10/07 →		04
MEGANE CC	1.6 16V (EZ0U, EZ1U)	81	K4M 858	06/10 →		04
MEGANE I	1.8 16V (BA06, BA12, BA1A, BA1M, BA1R)	85	F4P 720	01/01 → 08/03		04
		85	F4P 722	01/01 → 08/03		04
MEGANE II	1.4 16V	60	K4J 732	10/03 → 02/08	→ 12/05	04
	1.4 16V (BM0B, CM0B)	72	K4J 740	11/02 → 02/08		04
		72	K4J 730	11/02 → 02/08		04
	1.6	77	K4M 788	06/05 → 02/08		04
	1.6 16V	82	K4M 760	01/06 → 06/08		04
		82	K4M 813	01/06 → 06/08		04
		82	K4M 812	01/06 → 06/08		04
	1.6 16V (BM0C, CM0C)	83	K4M 760	11/02 → 02/08		04
	2.0 16V (BM0U, CM0U)	99	F4R 770	11/02 → 02/08		04
MEGANE III	1.6 16V (BZ0H)	74	K4M 848	11/08 →		04
	1.6 16V (BZ1B, BZ1H)	81	K4M 858	11/08 →		04
	1.6 16V (DZ0H)	74	K4M 848	11/08 →		04
	1.6 16V (DZ0U, DZ1B, DZ1H)	81	K4M 858	11/08 →		04
	1.6 16V (KZ0H)	74	K4M 848	05/09 →		04
	1.6 16V (KZ0U, KZ1B, KZ1U)	81	K4M 858	05/09 →		04
MODUS / GRAND MODUS	1.4 (JP01, JP0J)	72	K4J 780	12/04 →		04
		72	K4J 770	12/04 →		04
	1.6 (JP03, JP0B, JP0U, JP0Y, JP1G)	82	K4M 791	12/04 →		04
		82	K4M 801	12/04 →		04
		82	K4M 800	12/04 →		04
		82	K4M 790	12/04 →		04
	1.6 (JP0L, JP0V)	65	K4M 794	12/04 →	→ 12/07	04
RAPID	1.4	59	E7J 773	05/95 → 08/97		04
SCÉNIC I	1.6	75	K4M 708	03/01 → 08/03		04
		75	K4M 709	03/01 → 08/03		04
		79	K4M 706	09/99 → 09/03		04
		79	K4M 700	09/99 → 09/03		04
	1.6 RT 16V	79	K4M 706	09/99 → 09/03		04
		79	K4M 700	09/99 → 09/03		04
	1.8 16V (JA12, JA1R, JA1M, JA1A)	85	F4P 722	01/01 → 08/03		04
		85	F4P 720	01/01 → 08/03		04
	1.8 4x4	85	F4P 722	07/00 → 04/01		04
	2.0 16V	103	F4R 744	09/99 → 08/03		04
		103	F4R 741	09/99 → 08/03		04
		103	F4R 747	09/99 → 08/03		04
		103	F4R 740	09/99 → 08/03		04

7LPR

		kW				QTY
RENAULT						
SCÉNIC I	2.0 16V (JA1B, JA1D)	102	F4R 746	07/00 → 08/03		04
		102	F4R 741	07/00 → 08/03		04
		102	F4R 740	07/00 → 08/03		04
	2.0 16V RX4	102	F4R 746	06/00 → 08/03		04
		102	F4R 744	06/00 → 08/03		04
SCÉNIC II	1.4 (JM0B, JM0H, JM1A)	72	K4J 770	06/03 →	→ 09/06	04
		72	K4J 740	06/03 →	→ 09/06	04
		72	K4J 730	06/03 →	→ 09/06	04
	1.6	77	K4M 788	06/06 →	→ 07/06	04
	1.6 (JM0C, JM0J, JM1B)	83	K4M 782	06/03 →	→ 12/05	04
		83	K4M 761	06/03 →	→ 12/05	04
	1.6 16V (JM1R)	82	K4M 812	10/05 →	→ 07/08	04
		82	K4M 766	10/05 →	→ 07/08	04
		82	K4M 706	10/05 →	→ 07/08	04
		82	K4M 813	10/05 →	→ 07/08	04
	2.0 (JM05, JM0U, JM1N, JM1U, JM2V)	99	F4R 770	06/03 →	→ 09/06	04
		99	F4R 771	06/03 →	→ 09/06	04
	2.0 16V Turbo (JM0W)	120	F4R 776	05/04 →	→ 07/08	04
SCÉNIC III	1.6 16V (JZ0U)	81	K4M 858	02/09 →		04
		81	K4M R 858	02/09 →		04
	1.6 E85 (JZ03)	81	K4M 866	02/09 →		04
SYMBOL I	1.6 16V	79	K4M 740	04/02 →	→ 09/08	04
SYMBOL II	1.6 16V	77	K4M 743	09/08 →		04
THALIA I	1.6 16V	79	K4M 740	04/02 →	→ 09/08	04
THALIA II	1.6 16V	77	K4M 743	09/08 →		04
ROVER						
100 / METRO	114 GTI 16V	69	14 K4D	03/90 → 08/91		04
		69	14 K4C	03/90 → 08/91		04
		76	14 K4F	08/91 → 12/98	→ 01/95	04
	114 GTI/GT 16V Cat	66	14 K4D	03/90 → 12/98	→ 12/92	04
		66	14 K4C	03/90 → 12/98	→ 12/92	04
	114 S/L/GTA	55	14 K2D	03/90 → 12/98		04
		55	14 K2A	03/90 → 12/98		04
200	214	55	14 K2D	09/93 → 10/95		04
		55	14 K2A	09/93 → 10/95		04
	214 GSi/Si	70	14 K4C	01/90 → 10/95	→ 09/92	04
		76	14 K4F	12/92 → 10/95		04
	214 i	55	14 K2F	11/95 → 03/00	→ 03/96	04
	214 Si	76	14 K4F	11/95 → 03/00	→ 03/96	04
	214 Si/Gsi	66	14 K4C	10/89 → 10/95	→ 09/92	04
		66	14 K4D	10/89 → 10/95	→ 09/92	04
	216 GSi	82	D 16 Z2	10/89 → 10/95		04
		85	D 16 A7	10/89 → 10/95		04
		90	D 16 A8	09/90 → 10/95		04
		96	D 16 A9	09/90 → 10/95	→ 11/93	04

MAGNETI MARELLI

7LPR

		kW				QTY
ROVER						
200	220 GTi	100	20 T4H	01/93 → 10/95		04
		103	20 M4F	09/91 → 10/95	→ 09/92	04
	220 Turbo	147	20 T4G	01/93 → 10/95		04
400	414	70	14 K4C	01/93 → 04/95		04
	414 GSI/SI	66	14 K4C	04/90 → 04/95	→ 09/92	04
		66	14 K4D	04/90 → 04/95	→ 09/92	04
	414 GSI/SI Cat	76	14 K4F	01/93 → 04/95		04
	416 GSI	82	D 16 Z2	04/90 → 04/95		04
	416 GSI/GSE	85	D 16 A7	04/90 → 04/95		04
	416 GTI	90	D 16 A8	04/90 → 04/95	→ 09/92	04
	416 GTI/GTE	96	D 16 A9	04/90 → 04/95	→ 09/92	04
	420 GSI/SLI/GTI/Vite	100	20 T4H	01/93 → 04/95		04
	420 GTI/GSI/Vitesse	103	20 M4F	02/92 → 04/95	→ 09/92	04
	420 Turbo	147	20 T4G	01/93 → 04/95		04
800	820 16V Turbo (RS)	132	T 16	01/92 → 02/99		04
	820 I/SI (RS)	100	20 T4H	01/92 → 02/99		04
	820 Sport	145	20 T4G	04/94 → 03/96		04
	825 Si Lux (RS)	129	25 K4F	04/96 → 02/99		06
	825 SI/Sterling (XS)	127	C 25 A2	01/87 → 12/91	→ 02/88	06
		130	C 27 A2	02/88 → 12/91		06
	827 SI/Sterling Catalytic-Conv (XS)	124	C 27 A1	02/88 → 02/99	→ 09/91	06
COUPE	1.6 16 V	82	16 K4F	03/96 → 11/99		04
MAESTRO	1.6	63	16 H	09/90 → 01/95	→ 04/92	04
SEAT						
ALTEA	2.0 FSI	110	BVZ	05/04 → 03/09		04
		110	BVY	05/04 → 03/09		04
		110	BLY	05/04 → 03/09		04
		110	BLR	05/04 → 03/09		04
LEON (1P1)	2.0 FSI	110	BVY	07/05 → 05/10		04
		110	BLY	07/05 → 05/10		04
		110	BLR	07/05 → 05/10		04
		110	BVZ	07/05 → 05/10		04
TOLEDO III	2.0 FSI	110	BLY	10/04 → 05/09		04
		110	BLR	10/04 → 05/09		04
		110	BVY	10/04 → 05/09		04
		110	BVZ	10/04 → 05/09		04
SKODA						
FAVORIT (781)	1.3 (781)	50	136B	01/94 → 09/94		04
FELICIA	1.3	50	AMH	10/94 → 03/98		04
		50	136B	10/94 → 03/98		04
FORMAN	1.3	50	136B	01/94 → 06/95		04

7LPR

		kW				QTY
SKODA						
OCTAVIA	2.0 FSI	110	BLY	11/04 → 10/08		04
		110	BLR	11/04 → 10/08		04
		110	BVZ	11/04 → 10/08		04
		110	BVY	11/04 → 10/08		04
SUZUKI						
ALTO	1.0	43	G10BB	01/00 → 06/02		04
	1.6	71	G16B	10/98 → 09/00		04
BALENO	1.3 (SY413)	52	G13BA	09/96 → 05/02		04
	1.3 i 16V (SY413)	63	G13BB	07/95 → 05/02		04
	1.6 i 16V (SY416)	72	G16B	07/95 → 05/02		04
	1.6 i 16V 4x4 (SY416)	72	G16B	07/95 → 05/02		04
CARRY	1.3 16 V	58	G13BB	03/00 →	→ 01/04	04
	1.3 4x4	56	G13BB	02/99 → 09/04		04
JIMNY	1.3 16V (SN413)	59	G13BB	09/98 →		04
	1.3 16V 4WD (SN413)	59	G13BB	09/98 →		04
VITARA	1.6 (SE 416)	70	G16B	02/91 → 03/98		04
	1.6 i 16V (ET, TA02, SE416)	71	G16B	07/90 → 03/98		04
	1.6 i 16V Trazione integrale (ET, TA02)	71	G16B	07/90 → 03/98		04
	1.6 i JLX (SE 416)	70	G16B	02/91 → 03/98		04
	2.0 16V (SV420)	97	J20A	12/96 → 03/98		04
	2.0 16V Trazione integrale (SV420)	97	J20A	12/96 → 03/98		04
	2.0 V6 24V (SV620)	100	H 20 A	12/94 → 03/98		06
	2.0 V6 24V Trazione integrale (SV620)	100	H 20 A	12/94 → 03/98		06
	2.5 V6 24V Trazione integrale (FT)	118	H 25 A	12/95 → 03/98		06
	V6 24V (SV620)	100	H 20 A	12/94 → 03/98		06
X-90	1.6 i 16V (SZ 416)	71	G16B	09/95 → 12/97		04
	1.6 i 16V 4x4	71	G16B	09/95 → 12/97		04
VAUXHALL						
ASTRA Mk II	2.0 GTE 16V	115	20 XE	05/88 → 08/91		04
VOLKSWAGEN						
BORA III	2.0 FSI	110	BLX	08/05 → 10/10		04
		110	BVY	08/05 → 10/10		04
		110	BVZ	08/05 → 10/10		04
		110	BLY	08/05 → 10/10		04
		110	BLR	08/05 → 10/10		04
EOS	1.6 FSI	85	BLF	06/06 → 05/08		04
	2.0 FSI	110	BVZ	03/06 → 05/08		04
		110	BVY	03/06 → 05/08		04

MAGNETI MARELLI

7LPR

		kW				QTY
VOLKSWAGEN						
GOLF PLUS	2.0 FSI	110	BVZ	05/05 → 06/08		04
		110	BVY	05/05 → 06/08		04
		110	BLY	05/05 → 06/08		04
		110	BLR	05/05 → 06/08		04
GOLF V	2.0 FSI	110	AXW	01/04 → 11/08		04
		110	BVZ	01/04 → 11/08		04
		110	BVY	01/04 → 11/08		04
		110	BVX	01/04 → 11/08		04
		110	BLY	01/04 → 11/08		04
		110	BLX	01/04 → 11/08		04
		110	BLR	01/04 → 11/08		04
	2.0 GTI	169	BYD	09/06 → 12/08		04
JETTA III	2.0 FSI	110	BLY	08/05 → 10/10		04
		110	BLR	08/05 → 10/10		04
		110	BLX	08/05 → 10/10		04
		110	BVY	08/05 → 10/10		04
		110	BVZ	08/05 → 10/10		04
JETTA V	2.0 FSI	110	BLR	08/05 → 10/10		04
		110	BLX	08/05 → 10/10		04
		110	BVY	08/05 → 10/10		04
		110	BVZ	08/05 → 10/10		04
		110	BLY	08/05 → 10/10		04
PASSAT (3C2)	2.0 FSI	110	BVZ	03/05 → 07/10	→ 05/07	04
		110	BVY	03/05 → 07/10	→ 05/07	04
		110	BLY	03/05 → 07/10	→ 05/07	04
		110	BLR	03/05 → 07/10	→ 05/07	04
	2.0 FSI 4motion	110	BVX	09/05 → 07/10	→ 11/05	04
		110	BLY	09/05 → 07/10	→ 11/05	04
		110	BLX	09/05 → 07/10	→ 11/05	04
	2.0 FSI Confortline	110	BVZ	03/05 → 07/10	→ 05/07	04
		110	BVY	03/05 → 07/10	→ 05/07	04
		110	BLY	03/05 → 07/10	→ 05/07	04
		110	BLR	03/05 → 07/10	→ 05/07	04
TOURAN	2.0 FSI	110	BVZ	10/03 → 11/05		04
		110	BVY	10/03 → 11/05		04
		110	BLR	10/03 → 11/05		04
		110	AXW	10/03 → 11/05		04
		110	BLY	10/03 → 11/05		04
		110	BLX	10/03 → 11/05		04
VENTO III	2.0 FSI	110	BVY	08/05 → 10/10		04
		110	BVZ	08/05 → 10/10		04
		110	BLY	08/05 → 10/10		04
		110	BLR	08/05 → 10/10		04
		110	BLX	08/05 → 10/10		04

7LPR

		kW				QTY
VOLVO						
850	2.0	105	B 5204 F	06/91 → 12/96		05
S90	2.9	132	B 6304 S2	01/97 → 05/98		06
		150	B 6304 G	01/97 → 05/98		06
V90	2.9	132	B 6304 S2	01/97 → 12/98		06
		150	B 6304 G	01/97 → 12/98		06

A5KMR

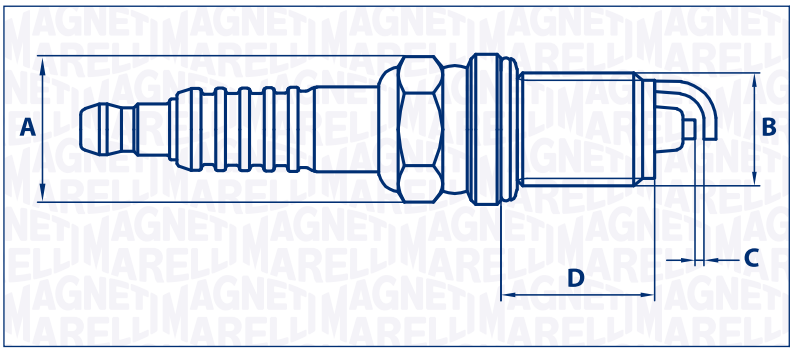

A	Hexagon Size	16
B	Thread Size	M14×1.25
C	Gap (mm)	1.1
D	Thread Reach	19.0
	Heat Range	5
	Type	Resistor
	Version	1 Mass Electrode
	Seat	Flat
	Core	Copper

BERU

0001335742	0002325723	0002330215	0002330712
0002330794	14 F-7 HUR2	14 FR-8 HU	14 FR-8 LU2T
14FR8LU2	14FR9KUX2	Z152	Z200
Z203	Z220	Z287	

BOSCH

51	0 242 225 580	0 242 229 576	0 242 229 699
0 242 229 715	0 242 236 565	FQR 8 LE 2	FQR 8 LEU 2
FR 7 HC	FR 8 LCX	FR 9 LCX	

CHAMPION

FN14LY	OE041/T10	OE154/T10	OE177/T10
RC11LCC4	RC12ECC	RC12LC4	RC12LYC
RC12MC4	RC12MCC4		

DENSO

KJ16CR-L11

NGK

5584	6893	7917	96523
ZFR5C11G	ZFR5J11	ZFR5N	ZFR5N11
ZFR5PG	ZFR5P-G		

		kW				QTY
ALFA ROMEO						
159 (939_)	1.8 MPI	103	939 A4.000	03/07 → 11/11	→ 02/08	04
BMW						
8 (E31)	850 CSi	280	S70 B56 (56121)	04/93 → 12/96		12
	850 i,Ci	220	M70 B50 (5012A)	04/90 → 10/94		12
CADILLAC						
BLS	2.0 T Flexpower	147	Z 20 LER	12/07 →		04
CHEVROLET						
CRUZE	1.8	103	LWE	11/09 →		04
		103	LUW	11/09 →		04
NIVA	1.8 4x4	92	Z 18 XE	01/07 → 12/09		04

MAGNETI MARELLI

A5KMR

		kW				QTY
CHEVROLET						
VIVA	1.8	90	Z 18 XE	09/03 → 03/08		04
		92	Z 18 XE	09/03 → 03/08		04
FIAT						
CROMA (194_)	1.8 16V	103	939 A4.000	12/05 →		04
HONDA						
ACCORD VI	1.6 i (CG7)	85	D16B6	10/98 → 12/02		04
	3.0 V6 24V (CG2)	147	J30A1	02/98 → 06/03		06
	3.0 Vtec (CK1)	147	J30A1	03/97 → 12/03		06
ACCORD VII	1.6 i (CG7)	85	D16B6	10/98 → 12/02		04
	3.0 V6 24V (CG2)	147	J30A1	02/98 → 06/03		06
	3.0 Vtec (CK1)	147	J30A1	03/97 → 12/03		06
BALLADE V	1.5 i 16V (EG8)	69	D15B2	10/91 → 11/95		04
		69	D15Z1	10/91 → 11/95		04
BALLADE VI	1.5 i (EK3)	84	D15Z6	11/95 → 02/01		04
	1.6 i Vtec	92	D16Y6	11/95 → 02/01		04
		92	D16Y8	11/95 → 02/01		04
CAPA	1.5 16V	72	D15B	04/98 → 09/02		04
	1.5 4x4	72	D15B	01/98 → 09/02		04
CIVIC IV	1.5 16V (MB3)	84	D15Z8	01/97 → 02/01		04
	1.5 i 16V (EG4)	69	D15B2	10/91 → 11/95		04
		69	D15Z1	10/91 → 11/95		04
	1.5 i Vtec-E (MA9)	66	D15Z3	09/94 → 01/97		04
CIVIC V	1.4 16V (MB8)	55	D14A7	04/98 → 02/01		04
		84	D15Z8	04/98 → 02/01		04
	1.5 i (EK3)	84	D15Z6	11/95 → 02/01		04
	1.5 i 16V (EG4)	69	D15B2	10/91 → 11/95		04
		69	D15Z1	10/91 → 11/95		04
	1.6 i (EK1)	84	D16Y5	11/95 → 02/01		04
	1.6 i Vtec	92	D16Y8	11/95 → 02/01		04
		92	D16Y6	11/95 → 02/01		04
CIVIC VI	1.4 16V (MB8)	55	D14A7	04/98 → 02/01		04
	1.5 16V (MB9)	84	D15Z8	04/98 → 02/01		04
	1.5 i (EK3)	84	D15Z6	11/95 → 02/01		04
	1.5 i Vtec-E (MA9)	66	D15Z3	09/94 → 01/97		04
	1.6 i	77	D16Y7	03/96 → 03/00		04
	1.6 i (EK1)	84	D16Y5	11/95 → 02/01		04
	1.6 i Vtec	92	D16Y8	03/96 → 03/00		04
		92	D16Y6	11/95 → 02/01		04
CIVIC VII	1.4 (ES4)	66	D14Z5	12/00 → 09/05		04
	1.4 i	55	D14Z6	02/01 → 09/05		04
	1.4 iS (EP1)	66	D14Z5	02/01 → 09/05		04
		66	D14Z6	02/01 → 09/05		04
	1.6	81	D16V1	02/01 → 09/05		04
	1.6 i	81	D16V1	02/01 → 12/05		04

A5KMR

		kW				QTY
HONDA						
CR-V I	2.0 (RD1)	98	B20Z1	04/99 → 02/02		04
	2.0 16V 4WD (RD1, RD3)	94	B20B	10/95 → 01/99		04
		108	B20Z1	01/99 → 02/02		04
	2.0 ELX 16V (RD1, RD3)	108	B20Z1	01/99 → 02/02		04
HR-V	1.6 16V (GH1, GH3)	77	D16W1	03/99 →	→ 09/05	04
	1.6 16V 4WD (GH2, GH4)	77	D16W1	03/99 →	→ 09/05	04
		91	D16W5	10/99 →	→ 09/05	04
LOGO	1.3 (GA3)	48	D13B7	03/99 → 03/02		04
ODYSSEY	2.3	110	F23A	07/02 → 09/03		04
	2.3 4x4	110	F23A	07/02 → 09/03		04
JEEP						
CHEROKEE	2.5	89	EPE	10/90 → 09/96		04
		89	EPE	10/95 → 09/01		04
	2.5 i 4x4	90	EPE	12/91 → 09/01		04
		90	HX	12/91 → 09/01		04
	2.5 SE	87	EPE	10/96 → 09/99		04
	4.0 i	135	MX	02/99 → 09/01		06
		136	ERH	01/88 → 09/01		06
	4.0 i 4x4	131	ERH	01/95 → 09/01		06
COMMANDER	4.7 V8 4x4	170	EVA	09/05 → 12/10		08
GRAND CHEROKEE II	4.0	140	ERH	10/98 → 09/04		06
	4.0 4x4	140	ERH	04/99 → 09/05		06
	4.7 V8 4x4	162	EVA	04/99 → 08/00		08
		167	EVA	06/03 → 09/05		08
		190	EVC	10/01 → 09/05		08
GRAND CHEROKEE III	4.7 V8 4x4	170	EVA	06/05 → 12/10	→ 05/07	08
WAGONEER	2.5	89	EPE	10/90 → 09/96		04
		89	EPE	10/95 → 09/01		04
	2.5 i 4x4	90	EPE	12/91 → 09/01		04
		90	HX	12/91 → 09/01		04
	2.5 SE	87	EPE	10/96 → 09/99		04
	4.0 i	136	ERH	01/88 → 09/01		06
		135	MX	02/99 → 09/01		06
		135	MX	12/91 → 09/01		06
	4.0 i 4x4	131	ERH	01/95 → 09/01		06
WRANGLER	2.5	89	EPE	12/91 → 08/96		04
	4.0	131	ERH	12/91 → 08/96		06
WRANGLER II	2.5	87	P00	08/96 → 04/07		04
	4.0	130	S01	08/96 → 04/07		06
	4.0 Rubicon	128	ERH	08/03 → 04/07		06

MAGNETI MARELLI

A5KMR

		kW				QTY
OPEL						
AGILA (A)	1.0	44	Z 10 XEP	08/03 → 12/07		03
	1.2 16V Twinport	59	Z 12 XEP	07/04 → 12/07		04
ASTRA A+	1.6	85	Z 16 XER	02/07 →		04
	1.8	103	A 18 XER	02/07 →		04
		103	Z 18 XER	02/07 →		04
ASTRA G	1.4 16V	66	X 14 XE	02/98 → 01/05		04
	1.6	76	Z 16 XEP	01/03 → 10/05		04
ASTRA H	1.2	59	Z 12 XEP	08/05 →		04
	1.4	55	Z 14 XEL	04/04 → 10/04		04
		55	Z 14 XEL	03/05 →	→ 09/10	04
		55	Z 14 XEL	08/04 →	→ 07/05	04
		59	Z 14 XEL	04/04 → 10/04		04
		66	Z 14 XEP	03/04 →		04
	1.6	85	Z 16 XER	12/07 →		04
		85	A 16 XER	12/07 →		04
	1.6 LPG	85	Z 16 XER	08/09 →		04
	1.6 Turbo	132	Z 16 LET	02/07 →		04
	1.8	92	Z 18 XE	03/04 →		04
		103	A 18 XER	01/06 →		04
		103	Z 18 XER	01/06 →		04
	2.0 Turbo	125	Z 20 LEL	03/04 →		04
		147	Z 20 LER	09/04 →		04
COMBO	1.4	66	Z 14 XEP	10/04 →		04
CORSA C	1.0	44	Z 10 XEP	06/03 → 12/09		03
	1.2 Twinport	59	Z 12 XEP	07/04 → 12/09		04
	1.4 Twinport	66	Z 14 XEP	06/03 → 12/09		04
CORSA D	1.0	48	A 10 XEP	01/10 →		03
		44	A 10 XEP	07/06 →		03
	1.2	59	Z 12 XEP	07/06 →		04
	1.4	66	Z 14 XEP	07/06 →		04
INSIGNIA	1.6	85	A 16 XER	07/08 →		04
MERIVA	1.4 16V Twinport	66	Z 14 XEP	07/04 → 05/10		04
	1.6	77	Z 16 XEP	01/06 → 05/10		04
MOKKA	1.6	85	B 16 XER	06/12 →		04
		85	A 16 XER	06/12 →		04
SIGNUM	1.8	90	Z 18 XE	05/03 →		04
		103	Z 18 XER	09/05 →		04
TIGRA TwinTop	1.4	66	Z 14 XEP	06/04 →		04
	1.8	92	Z 18 XE	06/04 →	→ 08/09	04
VECTRA C	1.6	74	Z 16 XE	08/05 →	→ 02/09	04
		77	Z 16 XEP	01/06 →	→ 02/09	04
	1.8	81	Z 18 XEL	04/02 →	→ 09/05	04
		103	Z 18 XER	01/06 →	→ 02/09	04
	1.8 16V	90	Z 18 XE	04/02 →	→ 02/09	04

A5KMR

		kW				QTY
OPEL						
VITA C	1.0	44	Z 10 XEP	06/03 → 12/09		03
	1.2 Twinport	59	Z 12 XEP	07/04 → 12/09		04
	1.4 Twinport	66	Z 14 XEP	06/03 → 12/09		04
ZAFIRA A	2.0 OPC	147	Z 20 LER	11/02 → 06/05		04
		147	Z 20 LET	11/02 → 06/05		04
ZAFIRA B	1.6	77	Z 16 XEP	07/05 →	→ 07/08	04
		77	Z 16 XE1	07/05 →	→ 07/08	04
		85	Z 16 XER	01/08 →		04
		85	A 16 XER	01/08 →		04
	1.8	103	Z 18 XER	07/05 →		04
		103	A 18 XER	07/05 →		04
	2.0	147	Z 20 LER	07/05 →		04
	2.2	110	Z 22 YH	07/05 →	→ 07/08	04
ZAFIRA C	1.8	85	A 18 XEL	10/11 →		04
ZAFIRA TOURER C	1.8	85	A 18 XEL	10/11 →		04
SAAB						
9-3	1.8 i	90	Z 18 XE	01/04 →	01/06 → 01/09	04
SEAT						
CORDOBA	1.2	47	AZQ	10/02 → 06/06		03
		47	BME	10/02 → 06/06		03
IBIZA IV	1.2	44	BBM	06/07 → 05/08		03
		47	AZQ	02/02 → 06/06		03
		47	BME	02/02 → 06/06		03
	1.2 12V	51	BXV	05/06 → 11/09		03
IBIZA V	1.2	51	CJLB	03/08 →		03
		51	CGPA	03/08 →		03
		51	BZG	03/08 →		03
SKODA						
FABIA (542)	1.2	44	CHFA	12/07 → 12/14	→ 03/10	03
		44	BBM	12/07 → 12/14	→ 03/10	03
		51	CHTA	01/07 → 12/14	→ 03/10	03
		51	CGPA	01/07 → 12/14	→ 03/10	03
		51	CEVA	01/07 → 12/14	→ 03/10	03
		51	BZG	01/07 → 12/14	→ 03/10	03
FABIA (6Y2)	1.2	40	BMD	08/02 → 03/08	→ 05/04	03
		40	AWY	08/02 → 03/08	→ 05/04	03
		47	BME	01/03 → 03/08	→ 11/06	03
		47	AZQ	01/03 → 03/08	→ 11/06	03
	1.4 16V	55	BBY	12/99 → 03/08	08/04 →	04
		55	AUA	12/99 → 03/08	08/04 →	04
		55	BKY	12/99 → 03/08	08/04 →	04

MAGNETI MARELLI

A5KMR

		kW				QTY
SKODA						
FABIA (6Y3)	1.2	40	AWY	07/01 → 12/07	→ 10/02	03
		40	BMD	07/01 → 12/07	→ 10/02	03
		47	BME	01/03 → 12/07		03
		47	AZQ	01/03 → 12/07		03
	1.4 16V	55	BKY	10/99 → 12/07	08/04 →	04
		55	BBY	10/99 → 12/07	08/04 →	04
		55	AUA	10/99 → 12/07	08/04 →	04
FABIA Praktik	1.2	40	BMD	07/01 → 12/07	→ 10/02	03
		40	AWY	07/01 → 12/07	→ 10/02	03
		47	AZQ	01/03 → 12/07		03
		47	BME	01/03 → 12/07		03
PRAKTIK	1.2	47	BME	05/06 → 01/07		03
		51	CGPA	01/07 →	→ 03/09	03
		51	BZG	01/07 →	→ 03/09	03
ROOMSTER	1.2	47	BME	05/06 → 01/07		03
		51	CGPA	01/07 →	→ 03/09	03
		51	BZG	01/07 →	→ 03/09	03
SUZUKI						
WAGON R	1.2	59	Z 12 XEP	06/04 → 08/05		04
VAUXHALL						
AGILA Mk I (A)	1.2 16V Twinport	59	Z 12 XEP	07/04 → 11/06		04
ASTRA Mk IV (G)	1.4 16V	66	Z 14 XE	02/98 → 05/05		04
		66	X 14 XE	02/98 → 05/05		04
	1.6	76	Z 16 XEP	12/02 → 05/05		04
	1.6 16V	76	Z 16 XEP	03/00 → 08/05		04
ASTRA Mk V (H)	1.4	66	Z 14 XEP	01/04 → 05/09		04
	1.4 i 16V	66	Z 14 XEP	03/05 → 11/10		04
	1.6	77	Z 16 XEP	01/04 → 05/09		04
		85	Z 16 XER	01/04 → 05/09		04
		85	A 16 XER	08/04 → 03/09		04
		132	Z 16 LET	10/06 → 11/10		04
	1.6 i 16V	85	Z 16 XER	12/07 → 11/10		04
	1.8	103	A 18 XER	01/04 → 05/09		04
		92	Z 18 XE	01/04 → 05/09		04
	1.8 i 16V	103	A 18 XER	03/07 → 11/10		04
		103	Z 18 XER	03/07 → 11/10		04
	2.0 Turbo	125	Z 20 LEL	01/04 → 05/09		04
		147	Z 20 LER	01/04 → 05/09		04
ASTRA TwinTop Mk V (H)	1.6	132	Z 16 LET	10/06 → 11/10		04
	1.6 i 16V	85	Z 16 XER	10/06 → 11/10		04
	1.8	103	Z 18 XER	05/08 → 11/10		04
	2.0	125	Z 20 LEL	02/06 → 11/10		04
	2.0 Turbo	147	Z 20 LER	01/06 → 11/10		04
ASTRAVAN Mk IV (G)	1.6 i	55	X 16 SZR	08/98 → 09/00		04
		62	Z 16 SE	09/00 → 08/06		04

A5KMR

		kW				QTY
VAUXHALL						
ASTRAVAN Mk V (H)	1.4 i	66	Z 14 XEP	03/05 →		04
COMBO Mk II (C)	1.4 16V	66	Z 14 XE	10/01 → 05/07		04
	1.4 i 16V	66	Z 14 XEP	01/04 → 11/11		04
CORSA Mk II (C)	1.0 12V	44	Z 10 XEP	11/03 → 10/06		03
	1.2 Twinport	59	Z 12 XEP	07/04 → 10/06		04
	1.4 Twinport	66	Z 14 XEP	06/03 → 10/06		04
CORSA Mk III (D)	1.0 i 12V	48	A 10 XEP	06/10 →		03
	1.2	59	Z 12 XEP	11/06 →		04
	1.4	66	Z 14 XEP	07/06 →		04
CORSAVAN Mk II (C)	1.4	66	Z 14 XEP	11/03 → 06/06		04
CORSAVAN Mk III (D)	1.2	59	Z 12 XEP	07/09 →		04
INSIGNIA	1.6	85	A 16 XER	07/08 →		04
MERIVA Mk I (A)	1.4 16V Twinport	66	Z 14 XEP	01/03 → 10/09		04
	1.6 i 16V Twinport	77	Z 16 XEP	05/03 → 06/10		04
MOKKA	1.6	85	B 16 XER	06/12 →		04
		85	A 16 XER	06/12 →		04
SIGNUM	1.8	90	Z 18 XE	06/03 → 07/05		04
		103	Z 18 XER	08/05 → 05/08		04
TIGRA TwinTop	1.4	66	Z 14 XEP	06/04 → 08/09		04
	1.8	92	Z 18 XE	06/04 → 08/09		04
VECTRA Mk II (C)	1.8	103	Z 18 XER	01/06 → 07/08		04
	1.8 16V	90	Z 18 XE	04/02 → 07/08	10/05 →	04
ZAFIRA Mk II (B)	1.6	77	Z 16 XE1	07/05 →	→ 02/09	04
		77	Z 16 XEP	07/05 →	→ 02/09	04
		85	Z 16 XER	12/07 →		04
		85	A 16 XER	12/07 →		04
	1.8	103	Z 18 XER	04/05 →		04
		103	A 18 XER	04/05 →		04
	2.0	147	Z 20 LER	07/05 →		04
ZAFIRA Mk III	1.8	85	A 18 XEL	10/11 →		04
		88	A 18 XEL	10/11 →		04
VOLKSWAGEN						
BEETLE	2.0	85	BDC	09/02 → 10/10		04
		85	BGD	09/02 → 10/10		04
		85	AQY	01/98 → 09/10		04
		85	APK	01/98 → 09/10		04
		85	AEG	01/98 → 09/10		04
		85	CBPA	01/98 → 09/10		04
		85	BHP	01/98 → 09/10		04
		85	BEJ	01/98 → 09/10		04
		85	BER	01/98 → 09/10		04
		85	AZJ	01/98 → 09/10		04
		85	AVH	01/98 → 09/10		04
		85	BEV	01/98 → 09/10		04
		85	AZG	01/98 → 09/10		04

A5KMR

		kW				QTY
VOLKSWAGEN						
FOX	1.2	40	CHFB	04/05 →		03
		40	BMD	04/05 →		03
POLO (9N_)	1.2	40	AWY	01/02 → 05/07	→ 07/04	03
		40	BMD	01/02 → 05/07	→ 07/04	03
		44	BBM	05/07 → 11/09		03
	1.2 12V	47	AZQ	10/01 → 07/07		03
		47	BME	10/01 → 07/07		03
		51	BZG	05/07 → 11/09		03
	1.4 16V	55	AUA	10/01 → 05/08		04

CJT6FMR

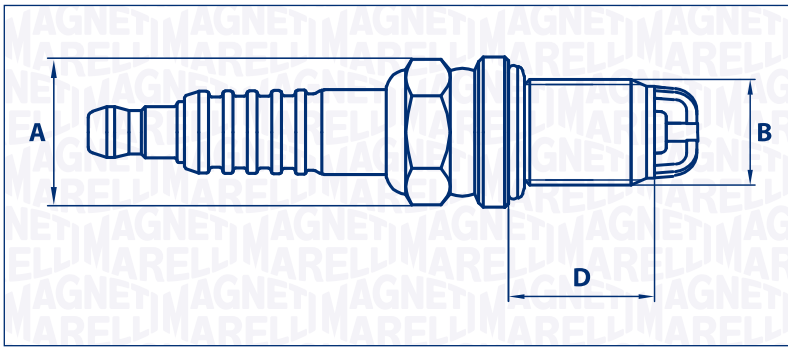

A	Hexagon Size	20.5
B	Thread Size	M14×1.25
C	Gap (mm)	0.8
D	Thread Reach	19.0
	Heat Range	6
	Type	Resistor
	Version	3 Mass Electrode
	Seat	Flat
	Core	Copper

BERU

0001330104	0001330112	0001330113	0001335108
0002330706	14 GH-8 DTUR	14G8DTU	14GH7DTUR
14GH8DTURX	14GR8DTU	Z75	Z91
Z92	Z93	Z94	

BOSCH

2	4	0 241 235 757	0 242 229 658
0 242 232 504	0 242 232 505	0 242 235 571	0 242 235 664
W 7 LTCR	WR 7 DTC	WR 7 LTC	WR 78
WR 78 X	WR 8 LT		

CHAMPION

OE025/R04	OE025/T10	OE027/R04	OE027/T10
RN10VTYC4	RN8VTYC	RN8VTYC4	

DENSO

W20EPBR-S

NGK

2470	2876	3172	3377
5932	7264	94024	97725
BUR5ET	BUR5ET-10	BUR5ETB10	BUR6ET
VL1	VL21	VL22	V-Line 1
V-Line 21	V-Line 22		

		kW				QTY
AUDI						
80 (89, 89Q, 8A, B3)	1.6	51	PP	08/87 → 09/91		04
	2.0 E	83	3A	08/88 → 10/90		04
	2.0 E quattro	83	3A	08/88 → 09/90		04

CJT6FMR

		kW				QTY
AUDI						
80 (8C, B4)	1.6	52	ABM	09/91 → 12/94		04
	1.6 E	74	ADA	06/93 → 12/94		04
	2.0	66	ABT	09/91 → 12/94		04
	2.0 E	85	ABK	09/91 → 12/94		04
	2.0 E quattro	85	ABK	09/91 → 12/94		04
90 (89, 89Q, 8A, B3)	2.0	85	PS	07/88 → 09/91		05
90 (8C, B4)	1.6	52	ABM	09/91 → 12/94		04
	1.6 E	74	ADA	06/93 → 12/94		04
	2.0	66	ABT	09/91 → 12/94		04
	2.0 E	85	ABK	09/91 → 12/94		04
	2.0 E quattro	85	ABK	09/91 → 12/94		04
100 (44, 44Q, C3)	2.0 Cat	85	RT	01/88 → 11/90		05
100 (4A, C4)	2.0	74	AAE	12/90 → 06/94		04
	2.0 E	85	AAD	12/90 → 06/94		04
		85	ABK	12/90 → 06/94		04
	2.3 E	98	AAR	12/90 → 06/94		05
500 (44, 44Q, C3)	2.0 Cat	85	RT	01/88 → 11/90		05
4000 (89, 89Q, 8A, B3)	1.6	51	PP	08/87 → 09/91		04
	2.0 E	83	3A	08/88 → 10/90		04
	2.0 E quattro	83	3A	08/88 → 09/90		04
5000 (44, 44Q, C3)	2.0 Cat	85	RT	01/88 → 11/90		05
A6 (4A, C4)	2.0	74	AAE	06/94 → 10/97		04
		85	ABK	06/94 → 10/97		04
CABRIOLET (8G7, B4)	2.0 E	85	ABK	01/93 → 07/98		04
COUPE (89, 8B)	2.0	83	3A	05/89 → 03/90		04
		85	ABK	05/89 → 12/96		04
		85	AAD	05/89 → 12/96		04
	2.3	98	NG	03/90 → 12/96		05
		100	NG	10/88 → 07/94		05
	2.3 quattro	100	NG	11/88 → 12/92		05
FIAT						
CROMA (154_)	2000 i.e. Turbo (154. AM, 154.LM)	110	154 C4.046	06/87 → 08/96		04
		110	834 C.146	06/87 → 08/96		04
TIPO (160_)	1.8 i.e.16V Sport	100	160 A5.000	11/89 → 06/92		04
LANCIA						
DELTA (831_)	1.6 HF Turbo (831AB.020S)	97	831 B7.046	04/87 → 03/89		04
	2.0 16V HF Evo Integrale (831AB.027)	155	831 E5.046	06/93 → 01/94		04
		155	831 E5.000	06/93 → 01/94		04
DELTA I (831_)	1.6 HF Turbo (831AB.020S)	97	831 B7.046	04/87 → 03/89		04
	2.0 16V HF Evo Integrale (831AB.027)	155	831 E5.046	06/93 → 01/94		04
		155	831 E5.000	06/93 → 01/94		04
KAPPA (838_)	2.0 16V Turbo (838AB1AA)	151	838 A4.000	02/95 → 10/01		04

MAGNETI MARELLI

CJT6FMR

		kW				QTY
PORSCHE						
968	3.0	176	M 44.44	06/91 → 11/95		04
		176	M 44.43	06/91 → 11/95		04
SEAT						
AROSA	1.0	37	AER	05/97 → 06/04		04
		37	AUC	05/97 → 06/04		04
		37	ANV	05/97 → 06/04		04
		37	ALD	05/97 → 06/04		04
		37	ALL	05/97 → 06/04		04
	1.4	44	AUD	05/97 → 06/04		04
		44	AKK	05/97 → 06/04		04
		44	AKV	05/97 → 06/04		04
		44	ANW	05/97 → 06/04		04
		44	APQ	05/97 → 06/04		04
		44	AEX	05/97 → 06/04		04
CORDOBA	1.0 i	37	AER	09/96 → 06/99		04
	1.4 i	44	ABD	06/94 → 06/99		04
		44	APQ	06/94 → 06/99		04
		44	AKV	06/94 → 06/99		04
		44	AEX	06/94 → 06/99		04
	1.6	55	ABU	06/99 → 12/02		04
		55	ALM	06/99 → 10/02		04
	1.6 i	55	1F	05/94 → 06/99		04
		55	AEE	02/93 → 06/99		04
		55	ALM	02/93 → 06/99		04
		55	ABU	02/93 → 06/99		04
	1.8 i	66	ACC	02/93 → 06/99		04
		66	ADZ	02/93 → 06/99		04
		66	ABS	02/93 → 06/99		04
IBIZA II	1.0	33	AAU	03/93 → 09/96		04
	1.0 i	37	AER	09/96 → 08/99		04
	1.3 i	40	2G	03/93 → 08/99		04
		40	AAV	03/93 → 08/99		04
	1.4 i	44	ABD	09/93 → 08/99		04
		44	AKV	09/93 → 08/99		04
		44	AEX	09/93 → 08/99		04
		44	APQ	09/93 → 08/99		04
	1.6 i	55	1F	09/94 → 06/99		04
		55	ABU	03/93 → 08/99		04
		55	AEE	03/93 → 08/99		04
		55	ALM	03/93 → 08/99		04
	1.8 i	66	ACC	03/93 → 08/99		04
		66	ADZ	03/93 → 08/99		04
		66	ABS	03/93 → 08/99		04
	2.0 i	85	AGG	03/93 → 08/99		04
		85	2E	03/93 → 08/99		04

CJT6FMR

		kW				QTY
SEAT						
IBIZA III	1.6	55	ALM	08/99 → 02/02		04
INCA	1.6 i	55	AEE	06/97 → 09/00		04
		55	ALM	06/97 → 09/00		04
		55	1F	11/95 → 05/98		04
TOLEDO I	1.6 i	52	1F	05/91 → 12/93		04
		54	1F	05/91 → 03/99		04
		54	EZ	05/91 → 03/99		04
		54	ABN	05/91 → 03/99		04
		55	1F	01/93 → 03/99		04
	1.8 i	66	ACC	11/93 → 12/96		04
		66	ADZ	11/93 → 12/96		04
		66	ABS	11/93 → 12/96		04
	2.0 i	85	AGG	05/91 → 03/99		04
		85	2E	05/91 → 03/99		04
SKODA						
FELICIA	1.6	55	AEE	06/97 → 04/02		04
	1.6 LX	55	AEE	08/95 → 03/98		04
		55	EA111	08/95 → 03/98		04
FELICIA II	1.6	55	AEE	01/98 → 06/01		04
OCTAVIA	1.6	55	AEE	09/96 → 09/04		04
VOLKSWAGEN						
CABRIO III	1.8	66	ABS	07/93 → 05/98		04
		66	ADZ	07/93 → 05/98		04
	2.0	85	AKR	07/93 → 05/98		04
		85	2E	07/93 → 05/98		04
		85	AGG	07/93 → 05/98		04
		85	ADY	07/93 → 05/98		04
CABRIO IV	1.8	66	ANP	06/98 → 06/02		04
		66	ADZ	06/98 → 06/02		04
	2.0	85	ATU	06/98 → 06/02		04
		85	AWG	06/98 → 06/02		04
		85	AWF	06/98 → 06/02		04
		85	AKR	06/98 → 06/02		04
		85	AGG	06/98 → 06/02		04
CADDY II	60 1.4	44	AEX	11/95 → 01/04		04
		44	AUD	11/95 → 01/04		04
		44	APQ	11/95 → 01/04		04
	75 1.6	55	1F	11/95 → 05/97		04
		55	AEE	11/95 → 09/00		04

MAGNETI MARELLI

CJT6FMR

		kW				QTY
VOLKSWAGEN						
CARAVELLE IV	2.5	81	ACU	11/90 → 04/03		05
		81	AAF	11/90 → 04/03		05
		81	AEU	11/90 → 04/03		05
		81	AEN	11/90 → 04/03		05
	2.5 Syncro	85	AET	07/96 → 04/03		05
		85	APL	07/96 → 04/03		05
		85	AVT	07/96 → 04/03		05
CORRADO	2.0 i	85	ADY	04/93 → 12/95		04
		85	2E	04/93 → 12/95		04
DERBY	54 1.4	40	ANX	01/98 → 08/99		04
	60 1.4	44	AKK	12/95 → 09/01		04
		44	AKV	12/95 → 09/01		04
		44	AUD	12/95 → 09/01		04
		44	AEX	12/95 → 09/01		04
		44	APQ	12/95 → 09/01		04
		44	ANW	12/95 → 09/01		04
	75 1.6	55	1F	11/95 → 09/97		04
		55	AEE	11/95 → 09/01		04
		55	ALM	11/95 → 09/01		04
	90	66	ABS	01/97 → 09/01	08/98 →	04
		66	ADD	01/97 → 09/01	08/98 →	04
		66	ADZ	01/97 → 09/01	08/98 →	04
	90 1.8	66	ABS	01/97 → 09/01	08/98 →	04
		66	ADD	01/97 → 09/01	08/98 →	04
		66	ADZ	01/97 → 09/01	08/98 →	04
GOLF II	1.8 i Cat Syncro	66	RP	08/87 → 10/91		04
GOLF III	1.4	40	ABD	07/93 → 04/99		04
		44	AEX	10/91 → 08/97		04
		44	ABD	10/91 → 08/97		04
		44	APQ	07/93 → 04/99		04
	1.6	55	AEA	09/92 → 08/97		04
		55	ABU	09/92 → 08/97		04
		55	AEE	09/92 → 08/97		04
	1.8	55	AAM	11/91 → 08/97		04
		66	ANP	07/93 → 04/99		04
		66	ABS	11/91 → 08/97		04
		66	ACC	11/91 → 08/97		04
		66	ADZ	11/91 → 08/97		04
	1.8 Syncro (1HX1)	66	ABS	01/93 → 08/97		04
		66	ADZ	01/93 → 08/97		04
	2.0	85	ADY	11/91 → 08/97		04
		85	AKR	11/91 → 08/97		04
		85	ABA	11/91 → 08/97		04
		85	2E	11/91 → 08/97		04
		85	AGG	11/91 → 08/97		04

CJT6FMR

		kW				QTY
VOLKSWAGEN						
GOLF III	2.0 GL	79	AEP	08/95 → 09/97		04
	2.0 Syncro (1HX1)	85	AGG	08/95 → 08/97		04
GOLF IV	1.8	66	ANP	06/98 → 06/02		04
		66	ADZ	06/98 → 06/02		04
	2.0	85	AWF	06/98 → 06/02		04
		85	AKR	06/98 → 06/02		04
		85	AWG	06/98 → 06/02		04
		85	AGG	06/98 → 06/02		04
		85	ATU	06/98 → 06/02		04
JETTA III (1H2)	1.4	44	ABD	11/91 → 09/98	→ 07/95	04
		44	AEX	11/91 → 09/98	→ 07/95	04
	1.6	55	AEE	09/92 → 09/98	→ 09/94	04
		55	ABU	09/92 → 09/98	→ 09/94	04
		55	AEA	09/92 → 09/98	→ 09/94	04
	1.8	55	AAM	11/91 → 09/98		04
		66	ABS	11/91 → 09/98		04
		66	ACC	11/91 → 09/98		04
		66	ADZ	11/91 → 09/98		04
		66	ADD	11/91 → 09/98		04
	2.0	85	2E	11/91 → 09/98		04
		85	AGG	11/91 → 09/98		04
		85	ADY	11/91 → 09/98		04
		85	AKR	11/91 → 09/98		04
LUPO	1.0	37	ANV	09/98 → 07/05	→ 05/03	04
		37	AUC	09/98 → 07/05	→ 05/03	04
		37	ALL	09/98 → 07/05	→ 05/03	04
		37	AER	09/98 → 07/05	→ 05/03	04
		37	ALD	09/98 → 07/05	→ 05/03	04
MULTIVAN IV	2.5	81	ACU	11/90 → 04/03		05
		81	AAF	11/90 → 04/03		05
		81	AEU	11/90 → 04/03		05
		81	AEN	11/90 → 04/03		05
	2.5 Syncro	85	AVT	07/96 → 04/03		05
		85	AET	07/96 → 04/03		05
		85	APL	07/96 → 04/03		05
PASSAT (3A2, 35I)	1.6	53	1F	02/88 → 09/91		04
		53	EZ	02/88 → 09/91		04
	2.0	79	AEP	03/95 → 08/96		04
		85	ABA	02/90 → 08/96		04
		85	2E	02/90 → 08/96		04
		85	AGG	02/90 → 08/96		04
		85	ADY	02/90 → 08/96		04
	2.0 Syncro	85	2E	10/90 → 08/96		04
		85	ADY	10/90 → 08/96		04
		85	AGG	10/90 → 08/96		04

MAGNETI MARELLI

CJT6FMR

		kW				QTY
VOLKSWAGEN						
PASSAT (3A5, 35I)	1.8	55	AAM	08/90 → 05/97		04
		66	ADZ	02/88 → 05/97		04
		66	RP	02/88 → 05/97		04
		66	ABS	02/88 → 05/97		04
POLO (6KV2)	54 1.4	40	ANX	01/98 → 08/99		04
	60 1.4	44	AUD	12/95 → 09/01		04
		44	AKK	12/95 → 09/01		04
		44	ANW	12/95 → 09/01		04
	75 1.6	55	1F	11/95 → 09/97		04
		55	ALM	11/95 → 09/01		04
	90	66	ADD	01/97 → 09/01	08/98 →	04
		66	ADZ	01/97 → 09/01	08/98 →	04
		66	ABS	01/97 → 09/01	08/98 →	04
	90 1.8	66	ADD	01/97 → 09/01	08/98 →	04
		66	ADZ	01/97 → 09/01	08/98 →	04
		66	ABS	01/97 → 09/01	08/98 →	04
POLO (6KV5)	1.4	44	AUD	05/97 → 09/01		04
		44	AKK	05/97 → 09/01		04
		44	AKV	05/97 → 09/01		04
		44	ANW	05/97 → 09/01		04
	1.6	55	ALM	05/97 → 09/01		04
		55	AEE	05/97 → 09/01		04
POLO (6N1)	45 1.0	33	AEV	10/94 → 09/96		04
	50 1.0	37	AER	09/96 → 10/99		04
		37	ALL	09/96 → 10/99		04
	55 1.3	40	ADX	10/94 → 07/95		04
	60 1.4	44	AEX	07/95 → 10/99		04
		44	AKV	07/95 → 10/99		04
		44	APQ	07/95 → 10/99		04
	75 1.6	55	AHS	10/94 → 10/99		04
		55	AEE	10/94 → 10/99		04
POLO (6NF)	1.4	44	AEX	05/98 → 12/99		04
		44	APQ	05/98 → 12/99		04
SHARAN	2.0	85	ATM	09/95 → 03/10		04
		85	ADY	09/95 → 03/10		04

CJT6FMR

		kW				QTY
VOLKSWAGEN						
TRANSPORTER IV	2.0	62	AAC	07/90 → 04/03		04
	2.5	81	AAF	11/90 → 04/03		05
		81	AEN	11/90 → 04/03		05
		81	ACU	11/90 → 04/03		05
		81	AEU	11/90 → 04/03		05
		85	AET	08/96 → 04/03	05/99 →	05
		85	AVT	08/96 → 04/03	05/99 →	05
		85	APL	08/96 → 04/03	05/99 →	05
	2.5 Syncro	85	APL	08/96 → 04/03		05
		85	AVT	08/96 → 04/03		05
		85	AET	08/96 → 04/03		05
TRANSPORTER T4	2.0	62	AAC	07/90 → 04/03		04
	2.5	81	AAF	11/90 → 04/03		05
		81	AEN	11/90 → 04/03		05
		81	ACU	11/90 → 04/03		05
		81	AEU	11/90 → 04/03		05
		85	AET	08/96 → 04/03	05/99 →	05
		85	AVT	08/96 → 04/03	05/99 →	05
		85	APL	08/96 → 04/03	05/99 →	05
	2.5 Syncro	85	AVT	08/96 → 04/03		05
		85	AET	08/96 → 04/03		05
		85	APL	08/96 → 04/03		05
VAN II	60 1.4	44	APQ	11/95 → 01/04		04
		44	AEX	11/95 → 01/04		04
		44	AUD	11/95 → 01/04		04
	75 1.6	55	1F	11/95 → 05/97		04
		55	AEE	11/95 → 09/00		04
VENTO	1.4	44	ABD	11/91 → 09/98	→ 07/95	04
		44	AEX	11/91 → 09/98	→ 07/95	04
	1.6	55	ABU	09/92 → 09/98	→ 09/94	04
		55	AEA	09/92 → 09/98	→ 09/94	04
		55	AEE	09/92 → 09/98	→ 09/94	04
	1.8	55	AAM	11/91 → 09/98		04
		66	ABS	11/91 → 09/98		04
		66	ACC	11/91 → 09/98		04
		66	ADZ	11/91 → 09/98		04
		66	ADD	11/91 → 09/98		04
	2.0	85	2E	11/91 → 09/98		04
		85	AGG	11/91 → 09/98		04
		85	ADY	11/91 → 09/98		04
		85	AKR	11/91 → 09/98		04

MAGNETI MARELLI

CT5FMR

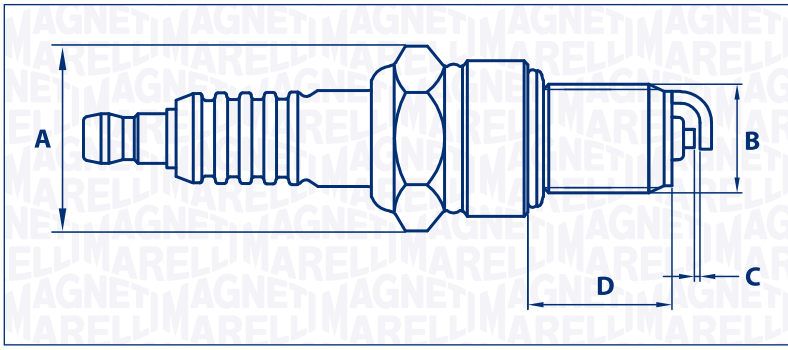

A	Hexagon Size	20.5
B	Thread Size	M14×1.25
C	Gap (mm)	0.8
D	Thread Reach	19.0
	Heat Range	5
	Type	Resistor
	Version	1 Mass Electrode
	Seat	Flat
	Core	Copper

BERU

0001330702	0001330713	0001330726	0002325700
0002330701	0002330709	14-8 DU0	148D
148DC	148DU	14R8DU	14R8DU4
14R9DU	Z1	Z119	Z69
Z70	Z8	Z82	

BOSCH

3	16	0 241 229 724	0 242 225 599
0 242 229 537	0 242 229 656	0 242 229 692	W 8 DC
WR 8 D	WR 8 DC	WR 8 DS	WR 9 D

CHAMPION

N11Y	N11YC	N11YCC	N12Y
N12YC	N12YCC	N13Y	N14Y
OE015/R04	OE015/T10	OE042/R04	OE042/T10
OE045/T10	OE051/R04	OE051/T10	OE055/T10
OE065/T10	OE106/T10	OE161/T10	OE170/T10
ON11Y	ON12Y	RN11Y	RN11YCC
RN12YC	RN12YCC		

DENSO

W16EPR-U

NGK

2140	2285	2364	3239
3781	4006	6511	7075
7281	7422	95737	96404
BP5E	BP5ES	BP5ESA	BP5ESL
BP5EZ	BPR5E	BPR5ES	BPR5ESL
VL6	VL8	V-Line 6	V-Line 8

		kW				QTY
ARO						
SPARTANA	1.2	40	C3G 702	01/99 → 10/06		04
BENTLEY						
CONTINENTAL	6.7	160	L 410 I	10/89 → 04/95		08
		166	L 410 I	10/89 → 09/92		08
	6.7 Turbo R	235	L 410 IT	10/91 → 09/95		08
TURBO R	6.7	235	L 410 IT	10/88 → 02/98		08
		287	L 410 IT	09/94 → 02/98		08
BMW						
3 (E30)	316 i	75	M10 B18 (184KA)	08/87 → 08/88		04
CHEVROLET						
KALOS	1.2	53	B12S1	03/05 →		04
CHRYSLER						
CARAVAN II	2.5 i	72	K00	01/91 → 09/95		04
		74	K	08/90 → 09/95		04
	3.0	104	EFA	10/90 → 09/95		06
	3.0 i	108	6G72	01/91 → 09/95	→ 02/91	06
		108	300	01/91 → 09/95	→ 02/91	06

CT5FMR

		kW				QTY
CHRYSLER						
CARAVAN III	3.0	112	EFA	01/95 → 03/01		06
GRAND VOYAGER III	3.0	112	EFA	01/95 → 03/01		06
LE BARON	2.2 i Turbo	130	EDR	09/89 → 01/91		04
	2.5 i	75	EDM	01/89 → 12/94		04
	2.5 i Turbo	112	EDT	01/89 → 12/94		04
	3.0 i V6	105	EFA	01/90 → 12/94		06
PHANTOM	2.2 i Turbo	130	EDR	09/89 → 01/91		04
	2.5 i	75	EDM	01/89 → 12/94		04
	2.5 i Turbo	112	EDT	01/89 → 12/94		04
	3.0 i V6	105	EFA	01/90 → 12/94		06
VOYAGER II	2.5 i	72	K00	01/91 → 09/95		04
		74	K	08/90 → 09/95		04
	3.0	104	EFA	10/90 → 09/95		06
		112	EFA	01/95 → 03/01		06
	3.0 i	108	6G72	01/91 → 09/95	→ 02/91	06
		108	300	01/91 → 09/95	→ 02/91	06
VOYAGER III	3.0	112	EFA	01/95 → 03/01		06
DACIA						
NOVA	1.4	48	C2J	04/96 → 03/01		04
GENTRA	1.2 SE	53	B12S1	11/02 → 04/05		04
KALOS	1.2	53	F12S3	04/03 →		04
		53	B12S1	04/03 →		04
MATIZ	1.0	47	B10S	01/03 →	→ 02/05	04
TICO	0.8	35	F8C	02/95 → 12/00		03
DODGE						
CARAVAN	3.0	112	EFA	01/95 → 03/01		06
DUCATO (280_)	2.0	62	170 D	03/89 → 08/90	07/90 →	04
DUCATO (290_)	2.0	63	170 D	06/90 → 05/94		04
		62	170 D	07/90 → 03/94		04
	2.0 4x4	63	170 D	06/90 → 05/94		04
LAND ROVER						
DEFENDER	3.5 4x4	86	11 D	09/90 → 08/93		08
MAZDA						
121	1.3	40	B3	04/89 → 10/90		04
		44	B3	10/87 → 11/90		04
121 II	1.1	40	B1	11/90 → 10/93		04
	1.3 16V	39	B3 (16V)	11/90 → 03/96		04
323 C IV	1.3	49	B3E	09/89 → 07/94		04
323 IV	1.3	49	B3E	09/89 → 06/91		04
		49	B383	09/89 → 06/91		04
323 S IV	1.3	49	B383	09/89 → 06/91		04
		49	B3E	09/89 → 06/91		04

MAGNETI MARELLI

CT5FMR

		kW				QTY
MAZDA						
626 III	1.6	60	F6	06/87 → 05/92		04
	2.2 12V	85	F2	11/87 → 07/91		04
B-SERIE	2.6 4WD	73	4G54	01/87 → 10/90		04
ETUDE IV	1.3	49	B3E	09/89 → 07/94		04
FAMILIA IV	1.3	49	B3E	09/89 → 07/94		04
		49	B383	09/89 → 06/91		04
PROTÉGÉ IV	1.3	49	B383	09/89 → 06/91		04
		49	B3E	09/89 → 06/91		04
TELSTAR III	1.6	60	F6	06/87 → 05/92		04
	2.2 12V	85	F2	11/87 → 07/91		04
MITSUBISHI						
COLT V	1.5 16V (CJ2A)	69	4G15 (16V)	11/95 → 09/03	→ 05/00	04
MIRAGE V	1.5 16V (CJ2A)	69	4G15 (16V)	11/95 → 09/03	→ 05/00	04
NISSAN						
CABSTAR	2.0	66	Z20S	07/94 → 05/94		04
CARAVAN	2.0	64	Z20	05/87 → 05/97		04
NOMAD	2.0	66	Z20S	07/87 → 08/94	→ 01/90	04
PATHFINDER I	2.4 i 4WD	76	Z24i	10/87 → 02/93		04
PATROL GR IV	4.2 Cat	121	TB42E	11/88 → 02/98		06
PATROL IV	4.2 Cat	121	TB42E	11/88 → 02/98		06
SAFARI IV	4.2 Cat	121	TB42E	11/88 → 02/98		06
TERRANO I	2.4 i 4WD	76	Z24i	10/87 → 02/93		04
URVAN	2.0	64	Z20	05/87 → 05/97		04
VANETTE	2.0	66	Z20S	07/87 → 08/94	→ 01/90	04
OPEL						
ASCONA C	1.6 i	55	E 16 LZ	09/87 → 08/88		04
		55	E 16 NZ	09/87 → 08/88		04
CALIBRA A	2.0 i	85	C 20 NE	06/90 → 07/97	07/93 →	04
	2.0 i 4x4	85	C 20 NE	06/90 → 07/97	07/93 →	04
COMBO	1.2	33	C 12 NZ	07/94 → 10/01		04
CORSA A	1.2 N	38	12 NV	01/90 → 03/93		04
CORSA B	1.2 i	33	12 NZ	03/93 → 09/00		04
		33	X 12 SZ	03/93 → 09/00		04
		33	C 12 NZ	03/93 → 09/00		04
	1.4 i	40	C 14 NZ	03/93 → 09/00	08/95 →	04
		40	X 14 SZ	03/93 → 09/00	08/95 →	04
		44	X 14 SZ	03/93 → 09/00	08/95 →	04
	1.4 Si	60	C 14 SE	03/93 → 09/00		04
OMEGA A	2.0	74	C 20 NEF	09/90 → 03/94		04
VECTRA A	1.6 i	55	E 16 NZ	09/88 → 11/95	09/93 →	04
	1.6 i Cat	55	C 16 NZ2	09/88 → 11/95	09/93 →	04
		55	C 16 NZ	09/88 → 11/95	09/93 →	04
	1.8 i Cat	66	C 18 NZ	03/90 → 11/95		04
	2.0	74	C 20 NEF	04/88 → 09/89		04

CT5FMR

		kW				QTY
OPEL						
VITA B	1.2 i	33	12 NZ	03/93 → 09/00		04
		33	X 12 SZ	03/93 → 09/00		04
		33	C 12 NZ	03/93 → 09/00		04
	1.4 i	40	C 14 NZ	03/93 → 09/00	08/95 →	04
		40	X 14 SZ	03/93 → 09/00	08/95 →	04
		44	C 14 NZ	03/93 → 09/00	08/95 →	04
		44	X 14 SZ	03/93 → 09/00	08/95 →	04
	1.4 Si	60	C 14 SE	03/93 → 09/00		04
PROTON						
ARENA Pick-up	1.5	64	4 G 15	05/02 →		04
COMPACT	1.5	64	4 G 15	07/00 →		04
JUMBUCK Pick-up	1.5	64	4 G 15	05/02 →		04
SATRIA	1.5	64	4 G 15	07/00 →		04
WIRA	1.3	55	4 G 13	08/00 →		04
	1.5	64	4 G 15	08/00 →		04
RENAULT						
19	1.4 (L532, L53P)	43	C2J 772	07/88 → 04/92		04
		43	C3J 710	07/88 → 04/92		04
	1.4 Cat (B/C532)	43	C3J 710	01/89 → 04/92		04
19 II	1.4 (532)	43	C3J 710	04/92 → 12/95		04
	1.4 (B/C532)	43	C3J 710	04/92 → 12/95		04
CLIO I	1.1	34	C1E 700	01/91 → 09/98		04
	1.2 (B/C/S577)	40	C3G 720	01/96 → 12/96		04
ESPACE III	2.0 (JE0A)	84	F3R 769	11/96 → 10/00		04
		84	F3R 768	11/96 → 10/00		04
		84	F3R 742	11/96 → 10/00		04
		84	F3R 729	11/96 → 10/00		04
		84	F3R 728	11/96 → 10/00		04
EXPRESS	1.1 (F40H)	33	C1E 756	06/87 → 09/91		04
EXTRA	1.1 (F40H)	33	C1E 756	06/87 → 09/91		04
MEGANE I	2.0	85	F3R 752	05/98 → 05/01		04
		85	F3R 751	05/98 → 05/01		04
		85	F3R 750	05/98 → 05/01		04
		85	F3R 798	05/98 → 05/01		04
		85	F3R 796	05/98 → 05/01		04
		85	F3R 791	05/98 → 05/01		04
		85	F3R 797	05/98 → 05/01		04
	2.0 RXE	85	F3R 752	05/98 → 05/01		04
		85	F3R 751	05/98 → 05/01		04
		85	F3R 750	05/98 → 05/01		04
		85	F3R 798	05/98 → 05/01		04
		85	F3R 796	05/98 → 05/01		04
		85	F3R 791	05/98 → 05/01		04
		85	F3R 797	05/98 → 05/01		04
RAPID Furgonato	1.1 (F40H)	33	C1E 756	06/87 → 09/91		04

CT5FMR

		kW				QTY
SUZUKI						
JIMNY	1.0 (SJ 413)	47	G13A	11/88 → 12/04		04
	1.0 Trazione integrale (SJ 410)	33	F10A	11/88 → 12/04		04
	1.3 JX Trazione integrale (SJ 413)	44	G13A	11/88 → 12/04		04
	1.3 Trazione integrale (SJ 413)	44	G13A	11/88 → 12/04		04
		47	G13A	11/88 → 12/04		04
SAMURAI	1.0 (SJ 413)	47	G13A	11/88 → 12/04		04
	1.0 Trazione integrale (SJ 410)	33	F10A	11/88 → 12/04		04
	1.3 JX Trazione integrale (SJ 413)	44	G13A	11/88 → 12/04		04
	1.3 Trazione integrale (SJ 413)	44	G13A	11/88 → 12/04		04
		47	G13A	11/88 → 12/04		04
SIERRA	1.0 (SJ 413)	47	G13A	11/88 → 12/04		04
	1.0 Trazione integrale (SJ 410)	33	F10A	11/88 → 12/04		04
	1.3 JX Trazione integrale (SJ 413)	44	G13A	11/88 → 12/04		04
	1.3 Trazione integrale (SJ 413)	44	G13A	11/88 → 12/04		04
		47	G13A	11/88 → 12/04		04
VITARA	1.6 (SE 416)	60	G16A (8V)	07/88 → 12/91		04
	1.6 (TA, TA01, SE416)	59	G16A (8V)	07/88 → 03/98		04
	1.6 i 4x4 (SE 416)	60	G16A (8V)	07/88 → 12/91		04
	1.6 Trazione integrale (SE 416)	54	G16A (8V)	10/88 →		04
		60	G16A (8V)	07/88 → 12/91		04
	1.6 Trazione integrale (TA, TA01)	59	G16A (8V)	07/88 → 03/98		04
VAUXHALL						
CALIBRA	2.0 i	85	C 20 NE	06/90 → 07/97	07/93 →	04
	2.0 i 4x4	85	C 20 NE	06/90 → 07/97	07/93 →	04
CARLTON Mk III	2.0	74	C 20 NEF	09/90 → 03/94		04
CAVALIER Mk III	1.8 i Cat	66	C 18 NZ	03/90 → 11/95		04
	2.0 i 4x4	85	20 NE	01/91 → 10/92		04
CORSA Mk I (B)	1.2 i	33	C 12 NZ	03/93 → 09/00		04
		33	X 12 SZ	03/93 → 09/00		04
	1.4 i	44	C 14 NZ	03/93 → 09/00	08/95 →	04
		44	X 14 SZ	03/93 → 09/00	08/95 →	04
CORSAVAN Mk I (B)	1.4 i	44	C 14 NZ	01/94 → 09/00	08/95 →	04
VOLKSWAGEN						
PASSAT (3A2, 35I)	1.6	55	EZ	02/88 → 12/88		04
		55	ABN	02/88 → 12/88		04
VOLVO						
340-360	1.4	51	B 14.4 S	08/87 → 07/88		04

CT5KHMR11

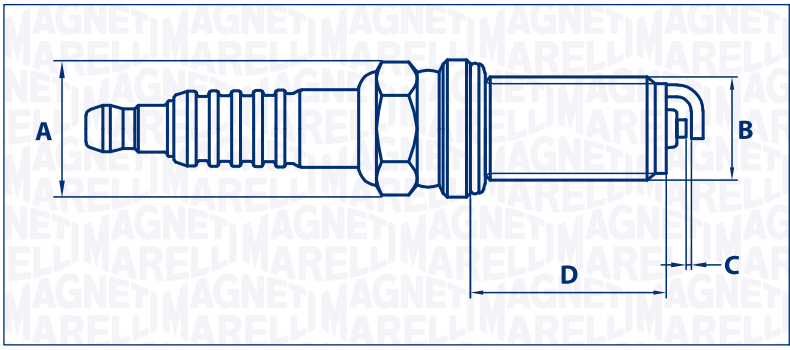

A	Hexagon Size	16
B	Thread Size	M14×1.25
C	Gap (mm)	1.1
D	Thread Reach	20.5
	Heat Range	5
	Type	Resistor
	Version	1 Mass Electrode
	Seat	Flat
	Core	Copper

BERU

0002330716	14 FR-8 MUI2	Z183

BOSCH

42 FR 8 ME	0 242 229 630 FR 8 SC	0 242 229 702 FR 8 SE 0	0 242 229 797

CHAMPION

OE135/T10 REC10YC4	OE148/T10 REC14PYC	OE175/R04	OE175/T10

DENSO

K16HPR-U11

NGK

6376 LFR5B	7113 LZFR5C11	97374 LZFR5C11G	LFR5A-11

		kW				QTY
CITROËN						
BERLINGO (B9)	1.6	66	NFR (TU5JP4B)	04/08 →		04
		80	NFU (TU5JP4)	04/08 →		04
		150	NFU (TU5JP4)	04/08 →		06
BERLINGO (MF)	1.6 16V (MFNFU)	80	NFU (TU5JP4)	10/00 →		04
		81	NFU (TU5JP4)	11/02 →		04
C2	1.6	80	NFU (TU5JP4)	09/03 →		04
	1.6 VTR	90	NFS (TU5JP4S)	01/05 →		04
	1.6 VTS	90	NFS (TU5JP4S)	01/05 →		04
C3 I	1.6 16V	80	NFU (TU5JP4)	02/02 →		04
		81	NFU (TU5JP4)	05/03 → 09/05		04
	1.6 Bioflex	83	NFU (TU5JP4)	10/05 →		04
	1.6 Exclusive 16V	81	NFU (TU5JP4)	05/03 → 09/05		04
	1.6 Exclusive Bioflex	83	NFU (TU5JP4)	10/05 →		04
C3 Pluriel	1.6	80	NFU (TU5JP4)	05/03 →		04
C4 Coupé	1.6 16V	80	NFU (TU5JP4)	11/04 → 07/11		04
	2.0 16V	100	RFN (EW10J4)	11/04 → 07/07		04
C4 Grand Picasso I	1.8 i 16V	92	6FY (EW7A)	10/06 →		04
	2.0 i 16V	103	RFJ (EW10A)	10/06 →		04
		105	RFJ (EW10A)	01/10 →		04
	2.0 i Exclusive 16V	105	RFJ (EW10A)	01/10 →		04
C4 I	1.6 16V	80	NFU (TU5JP4)	11/04 → 07/11		04
	2.0 16V	100	RFN (EW10J4)	11/04 → 07/07		04
		103	RFJ (EW10A)	11/04 → 07/11		04
	2.0 VTR 16V	103	RFJ (EW10A)	11/04 → 07/11		04

MAGNETI MARELLI

CT5KHMR11

		kW				QTY
CITROËN						
C4 Picasso I	1.8 Bifuel	92	6FY (EW7A)	01/09 → 10/12		04
	1.8 i 16V	92	6FY (EW7A)	02/07 → 12/11		04
	2.0 i 16V	103	RFJ (EW10A)	02/07 → 08/13		04
		105	RFN (EW10J4)	05/08 → 05/13		04
	2.0 i Exclusive 16V	103	RFJ (EW10A)	02/07 → 08/13		04
C4 Tre volumi	1.6 16V	80	NFU (TU5JP4)	07/06 → 07/11		04
	2.0 16V	103	RFJ (EW10A)	07/06 →		04
C5 I	1.8 16V (DC6FZB, DC6FZE)	85	6FZ (EW7J4)	03/01 → 08/04		04
	2.0 16V (DCRFNC, DCRFNF)	100	RFN (EW10J4)	03/01 → 08/04		04
	2.0 16V HPi (DCRLZB)	103	RLZ (EW10D)	03/01 → 08/04		04
	2.0 Exclusive 16V (DCRFNC, DCRFNF)	100	RFN (EW10J4)	03/01 → 08/04		04
C5 I Break	1.8 16V (DE6FZB, DE6FZE)	85	6FZ (EW7J4)	06/01 → 08/04		04
	2.0 16V (DERFNF, DERFNC, RERFNC)	100	RFN (EW10J4)	06/01 → 08/04		04
	2.0 16V HPi (DERLZB)	103	RLZ (EW10D)	06/01 → 08/04		04
	2.0 Exclusive 16V (DERFNF, DERFNC, RERFNC)	100	RFN (EW10J4)	06/01 → 08/04		04
C5 II	1.8 16V	92	6FY (EW7A)	09/05 →	→ 03/08	04
	1.8 16V (RC6FZB)	85	6FZ (EW7J4)	09/04 →	→ 12/05	04
	2.0 16V (RCRFJB, RCRFJC)	103	RFJ (EW10A)	09/04 →		04
	2.0 Exclusive 16V (RCRFJB, RCRFJC)	103	RFJ (EW10A)	09/04 →		04
C5 II Break	1.8 16V	92	6FY (EW7A)	09/05 →	→ 03/08	04
	1.8 16V (RE6FZB)	85	6FZ (EW7J4)	09/04 →	→ 12/05	04
	2.0 16V (RERFJB, RERFJC)	103	RFJ (EW10A)	09/04 →		04
	2.0 Exclusive 16V (RERFJB, RERFJC)	103	RFJ (EW10A)	09/04 →		04
C5 III	1.8 16V	92	6FY (EW7A)	02/08 →		04
	2.0 16V	103	RFJ (EW10A)	02/08 →		04
C5 III Break	1.8 16V	92	6FY (EW7A)	02/08 →		04
	2.0 16V	103	RFJ (EW10A)	02/08 →		04
	2.0 Exclusive 16V	103	RFJ (EW10A)	02/08 →		04
C8	2.0	100	RFN (EW10J4)	07/02 →		04
	2.0 16V	103	RFJ (EW10A)	09/05 →		04
		104	RFJ (EW10A)	09/05 →		04
	2.0 Exclusive	100	RFN (EW10J4)	07/02 →		04
C-ELYSEE	1.6 VTi 115	85	NFP (EC5)	11/12 →		04

CT5KHMR11

		kW				QTY
CITROËN						
DISPATCH	2.0	100	RFN (EW10J4)	04/00 → 12/06		04
	2.0 i 16V	102	RFN (EW10J4)	03/00 →	01/04 → 12/06	04
DISPATCH Van	2.0 i 16V	102	RFN (EW10J4)	03/00 →	→ 12/06	04
EVASION	2.0 16V	100	RFN (EW10J4)	05/00 → 07/02		04
JUMPY	2.0	100	RFN (EW10J4)	12/03 → 10/06		04
		100	RFN (EW10J4)	04/00 → 12/06		04
	2.0 i 16V	102	RFN (EW10J4)	03/00 →	→ 12/06	04
SYNERGIE	2.0 16V	100	RFN (EW10J4)	05/00 → 07/02		04
XSARA	1.6 16V	80	NFU (TU5JP4)	09/00 → 03/05		04
	1.6 Exclusive 16V	80	NFU (TU5JP4)	09/00 → 08/05		04
	1.6 GLX 16V	80	NFU (TU5JP4)	09/00 → 03/05		04
	1.8 VTS	85	6FZ (EW7J4)	08/98 → 12/00		04
	2.0 16V	100	RFN (EW10J4)	09/00 → 03/05		04
	2.0 GLX 16V	100	RFN (EW10J4)	09/00 → 03/05		04
XSARA PICASSO	1.6 16V	80	NFU (TU5JP4)	09/05 →		04
		81	NFU (TU5JP4)	06/05 → 09/06		04
	1.6 Exclusive 16V	81	NFU (TU5JP4)	06/05 → 09/06		04
	1.8 16V	85	6FZ (EW7J4)	02/00 →	→ 12/05	04
	2.0 16V	100	RFN (EW10J4)	01/03 →		04
	2.0 GLX 16V	100	RFN (EW10J4)	01/03 →		04
FIAT						
SCUDO (220_)	2.0	100	RFN (EW10J4)	05/00 → 12/06		04
	2.0 16V	100	RFN (EW10J4)	06/00 → 12/06		04
ULYSSE (220_)	2.0 16V	100	RFN (EW10J4)	09/00 → 08/02		04
HYUNDAI						
AZERA	2.4	121	G4KC	09/06 →		04
	2.4 16V	148	G4KJ	01/11 →		04
EMBERA V	2.0 GLSI	119	G4KD	07/08 → 12/10		04
	2.0 VVTi GLS	121	G4KD	01/08 →		04
	2.4	125	G4KC	06/08 → 12/09		04
		127	G4KE	06/08 →		04
GRANDEUR	2.4	121	G4KC	09/06 →		04
	2.4 16V	148	G4KJ	01/11 →		04
ix35	2.0	120	G4KD	01/10 →		04
		122	G4KD	01/10 →		04
	2.0 4WD	120	G4KD	01/10 →		04
	2.0 CVVT 4WD	122	G4KD	08/09 →		04
	2.0 GDi	122	G4NC	08/13 →		04
	2.0 GDi 4WD	122	G4NC	08/13 →		04
	2.0 GLS	120	G4KD	01/10 →		04
	2.4 DCVVT-I 4WD	128	G4KE	07/10 → 12/13		04
i45 VI	2.0	110	G4KD	01/09 →		04
	2.0 i	121	G4KD	01/11 →		04
	2.4	128	G4KC	01/09 →		04
		131	G4KC	01/09 →		04

MAGNETI MARELLI

CT5KHMR11

		kW				QTY
HYUNDAI						
NF V	2.0 GLSI	119	G4KD	07/08 → 12/10		04
	2.0 VVTi GLS	121	G4KD	01/08 →		04
	2.4	119	G4KC	01/05 →	→ 12/07	04
		125	G4KC	06/08 → 12/09		04
		127	G4KE	06/08 →		04
SANTA FÉ II	2.4	128	G4KE	11/10 →		04
	2.4 4x4	128	G4KE	07/10 →		04
	2.4 GLS	128	G4KE	11/10 →		04
SANTA FÉ III	2.4	141	G4KJ	09/12 → 12/15		04
	2.4 4WD	141	G4KJ	09/12 → 12/15		04
SONATA V	2.0 GLSI	119	G4KD	07/08 → 12/10		04
	2.0 VVTi GLS	121	G4KD	01/08 →		04
	2.4	119	G4KC	01/05 →	→ 12/07	04
		125	G4KC	06/08 → 12/09		04
		127	G4KE	06/08 →		04
SONATA VI	2.0	110	G4KD	01/09 →		04
	2.0 i	121	G4KD	01/11 →		04
	2.4	128	G4KC	01/09 →		04
		131	G4KC	01/09 →		04
TUCSON	2.0	120	G4KD	01/10 →		04
		122	G4KD	01/10 →		04
	2.0 4WD	120	G4KD	01/10 →		04
	2.0 CVVT 4WD	122	G4KD	08/09 →		04
	2.0 GDi	122	G4NC	08/13 →		04
	2.0 GDi 4WD	122	G4NC	08/13 →		04
	2.0 GLS	120	G4KD	01/10 →		04
	2.4 DCVVT-I 4WD	128	G4KE	07/10 → 12/13		04
KIA						
CERATO	2.0 MPi	110	G4KD	06/13 →		04
CERATO II	2.0	115	G4KD	01/09 →		04
FORTE	2.0 MPi	110	G4KD	06/13 →		04
FORTE II	2.0	115	G4KD	01/09 →		04
K3	2.0 MPi	110	G4KD	06/13 →		04
K3 II	2.0	115	G4KD	01/09 →		04
K5	2.4	132	G4KJ	03/12 →		04
		149	G4KJ	09/10 →		04
	2.4 EX	132	G4KJ	03/12 →		04
MAGENTIS	2.0 EX	121	G4KD	07/09 →	→ 08/10	04
OPTIMA	2.0 EX	121	G4KD	07/09 →	→ 08/10	04
	2.4	132	G4KJ	03/12 →		04
		149	G4KJ	09/10 →		04
	2.4 EX	132	G4KJ	03/12 →		04
SORENTO II	2.4 CVVT	128	G4KE	11/09 →		04
	2.4 CVVT 4WD	128	G4KE	11/09 →		04
	2.4 EX CVVT	128	G4KE	11/09 →		04

CT5KHMR11

		kW				QTY
KIA						
SPORTAGE	2.0 CVVT	120	G4KD	07/10 →		04
		122	G4KD	07/10 →		04
	2.0 CVVT AWD	120	G4KD	07/10 →		04
		122	G4KD	07/10 →		04
	2.0 GDI	122	G4NC	02/14 →		04
	2.0 GDI AWD	122	G4NC	02/14 →		04
	2.0 LX CVVT	120	G4KD	07/10 →		04
NISSAN						
ALMERA	1.6 16V	79	QG16DE	03/06 →	→ 04/10	04
ALMERA II	1.5	72	QG15DE	10/02 →		04
		77	GA15DE	03/01 →		04
		77	QG15DE	03/01 →		04
	1.5 SE	77	QG15DE	03/01 →		04
		77	GA15DE	03/01 →		04
	1.8	85	QG18DE	10/02 →		04
ALMERA TINO	1.8	85	QG18DE	12/02 →		04
CUBE	1.5	80	HR15DE	01/03 → 09/05		04
	1.5 4x4	80	HR15DE	01/03 → 09/05		04
PRIMERA	1.6	78	QG16DE	03/02 →		04
		80	QG16DE	01/02 →	→ 01/06	04
	1.6 16V	78	QG16DE	06/96 → 12/01		04
	1.8	85	QG18DE	03/02 →	→ 01/06	04
	2.0	103	QR20DE	07/02 →	→ 08/04	04
		103	QR20DE	03/02 →	→ 01/06	04
	2.5	125	QR25DE	01/02 →		04
PULSAR II	1.5	72	QG15DE	10/02 →		04
		77	QG15DE	03/01 →		04
	1.5 SE	77	QG15DE	03/01 →		04
	1.8	85	QG18DE	10/02 →		04
PULSAR VII	1.5	72	QG15DE	10/02 →		04
		77	QG15DE	03/01 →		04
	1.5 SE	77	QG15DE	03/01 →		04
	1.5 XL	77	QG15DE	03/01 →		04
	1.8	85	QG18DE	10/02 →		04
SENTRA II	1.5	72	QG15DE	10/02 →		04
	1.5 XL	77	QG15DE	03/01 →		04
	1.8	85	QG18DE	10/02 →		04
SENTRA V	2.5	129	QR25DE	06/02 →		04
SUNNY II	1.5	72	QG15DE	10/02 →		04
		77	GA15DE	03/01 →		04
		77	QG15DE	03/01 →		04
	1.5 SE	77	GA15DE	03/01 →		04
		77	QG15DE	03/01 →		04
	1.8	85	QG18DE	10/02 →		04
TINO	1.8	85	QG18DE	12/02 →		04

MAGNETI MARELLI

CT5KHMR11

		kW				QTY
NISSAN						
X-TRAIL	2.0	103	QR20DE	07/01 →	→ 03/07	04
	2.0 4x4	103	QR20DE	07/01 →		04
	2.5 4x4	121	QR25DE	09/02 →	→ 03/07	04
		124	QR25DE	06/07 →	10/09 →	04
	2.5 GX	121	QR25DE	09/02 →	→ 03/07	04
PEUGEOT						
206	1.6	81	NFU (TU5JP4)	05/05 → 07/08		04
	1.6 16V	80	NFU (TU5JP4)	03/07 →		04
		80	NFU (TU5JP4)	12/00 →		04
	2.0 S16	99	RFR (DEW10J4)	04/99 → 10/00		04
		100	RFR (DEW10J4)	06/99 →	→ 02/07	04
206 CC	1.6 16V	80	NFU (TU5JP4)	09/00 →		04
206 SW	1.6 16V	80	NFU (TU5JP4)	07/02 →		04
	2.0 16V	100	RFN (EW10J4)	07/02 →	→ 02/07	04
206+	1.6 16V	80	NFU (TU5JP4)	07/10 →		04
207	1.6	81	N6A (TU5JP4)	08/08 →		04
	1.6 16V	80	NFU (TU5JP4)	02/06 →		04
307	1.6	81	NFU (TU5JP4)	07/06 →		04
	1.6 16V	80	NFU (TU5JP4)	08/00 →		04
	1.6 Passion 16V	80	NFU (TU5JP4)	08/00 →		04
	2.0	100	RFN (EW10J4)	03/02 →	→ 06/05	04
		105	RFN (EW10J4)	08/08 →	→ 03/09	04
	2.0 16V	100	RFN (EW10J4)	08/00 →	→ 06/05	04
		103	RFN (EW10J4)	03/05 →	→ 11/07	04
		103	RFJ (EW10A)	03/05 →	→ 11/07	04
	2.0 Feline	105	RFN (EW10J4)	08/08 →	→ 03/09	04
	2.0 Rallye 16V	100	RFN (EW10J4)	08/00 →	→ 06/05	04
307 Break	1.6 16V	80	NFU (TU5JP4)	03/02 →		04
	2.0 16V	103	RFN (EW10J4)	03/05 →	→ 06/08	04
		103	RFJ (EW10A)	03/05 →	→ 06/08	04
307 CC	1.6 16V	80	NFU (TU5JP4)	02/05 →		04
	2.0 16V	103	RFJ (EW10A)	03/05 →	→ 03/09	04
406	1.8 16V	85	6FZ (EW7J4)	10/00 → 05/04		04
	2.0 16V	100	RFN (EW10J4)	08/00 → 06/04		04
	2.0 16V HPi	103	RLZ (EW10D)	05/01 → 05/04		04
	2.2	116	3FZ (EW12J4)	07/00 → 05/04		04
406 Coupé	2.0 16V	100	RFN (EW10J4)	10/00 → 12/04		04
407	1.8	85	6FZ (EW7J4)	05/04 →		04
	1.8 16V	92	6FY (EW7A)	09/05 →	→ 12/09	04
	2.0	100	RFN (EW10J4)	05/04 →	→ 10/05	04
	2.0 16V	103	RFJ (EW10A)	09/05 →	→ 12/09	04
	2.0 Allure Bioflex	103	RFJ (EW10A)	01/08 →		04
	2.0 Bioflex	103	RFJ (EW10A)	09/07 →		04
	2.2	116	3FZ (EW12J4)	05/04 →	→ 10/05	04
	2.2 16V	120	3FY (EW12J4)	09/05 →	→ 03/09	04

CT5KHMR11

		kW				QTY
PEUGEOT						
407 Break	2.2	116	3FZ (EW12J4)	05/04 →		04
607	2.0	100	RFN (EW10J4)	02/00 →	→ 09/04	04
	2.2 16V	116	3FZ (EW12J4)	02/00 →	→ 10/05	04
		120	3FY (EW12J4)	09/05 →	→ 11/07	04
806	2.0 16V	100	RFN (EW10J4)	09/00 → 08/02		04
807	2.0	100	RFN (EW10J4)	06/02 →	→ 10/05	04
	2.0 16V	103	RFJ (EW10A)	09/05 →		04
	2.2	116	3FZ (EW12J4)	06/02 →	→ 09/05	04
1007	1.6 16V	80	NFU (TU5JP4)	04/05 →		04
EXPERT	1.8	74	LFZ (XU7JP)	10/96 → 09/00		04
	2.0	100	RFN (EW10J4)	07/00 →		04
	2.0 16V	103	RFJ (EW10A)	01/07 →		04
		103	RFH (EW10A)	01/07 →		04
GRAND RAPID	1.6	66	NFR (TU5JP4B)	04/08 →		04
		80	NFU (TU5JP4)	04/08 →		04
		81	NFU (TU5JP4)	09/08 →		04
	1.6 16V	80	NFU (TU5JP4)	07/01 →		04
PARTNER	1.6	66	NFR (TU5JP4B)	04/08 →		04
		81	NFU (TU5JP4)	09/08 →		04
	1.6 16V	80	NFU (TU5JP4)	07/01 →		04
RANCH	1.6	66	NFR (TU5JP4B)	04/08 →		04
		80	NFU (TU5JP4)	04/08 →		04
		81	NFU (TU5JP4)	09/08 →		04
RANCH Furgonato	1.6	80	NFU (TU5JP4)	09/00 → 10/02		04
RANCH MPV / Space wagon	1.6 16V	80	NFU (TU5JP4)	07/01 →		04
RENAULT						
LAGUNA II	2.0 16V IDE (BG0N)	103	F5R 700	04/01 →	→ 09/07	04
		103	F5R 701	04/01 →	→ 09/07	04
MEGANE I	2.0 16V IDE (DA03, DA0P, DA14)	103	F5R 740	11/99 → 08/03		04
	2.0 16V IDE (EA03, EA0P, EA14)	103	F5R 740	11/99 → 08/03		04
	2.0 i	80	F3R 791	03/99 → 08/03	→ 10/00	04
		80	F3R 796	03/99 → 08/03	→ 10/00	04
SUZUKI						
GRAND ESCUDO II	2.4 (JB424)	122	J24B	01/09 →		04
	2.4 (JT424, JB424)	122	J24B	01/09 →		04
	2.4 Trazione integrale (JB424)	120	J24B	09/13 →		04
		122	J24B	01/09 →		04
		124	J24B	01/09 →		04

CT5KHMR11

		kW				QTY
SUZUKI						
GRAND VITARA II	2.4 (JB424)	122	J24B	01/09→		04
	2.4 (JT424, JB424)	122	J24B	01/09→		04
	2.4 Trazione integrale (JB424)	120	J24B	09/13→		04
		122	J24B	01/09→		04
		124	J24B	01/09→		04
GRAND VITARA XL-7 II	2.4 (JB424)	122	J24B	01/09→		04
	2.4 (JT424, JB424)	122	J24B	01/09→		04
	2.4 Trazione integrale (JB424)	120	J24B	09/13→		04
		122	J24B	01/09→		04
		124	J24B	01/09→		04
SX4	1.6 (RW 416)	74	M16A	06/06→		04
	1.6 VVT (RW 416)	79	M16A	06/06→		04
	1.6 VVT 4x4 (RW 416)	79	M16A	06/06→		04
	2.0	107	J20A	06/06→		04
	2.0 4x4	107	J20A	06/06→		04

CT5KMMR

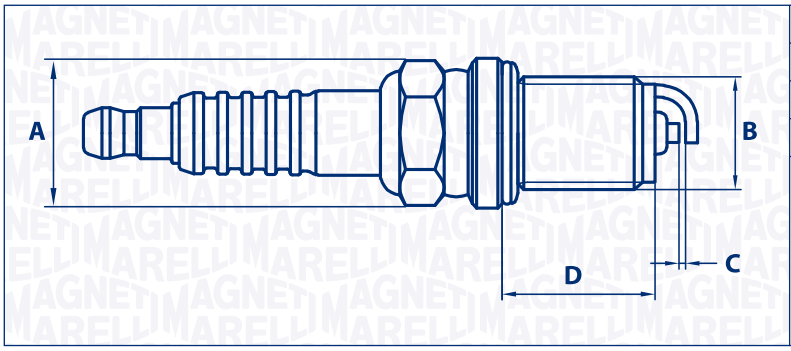

A	Hexagon Size	16
B	Thread Size	M14×1.25
C	Gap (mm)	0.8
D	Thread Reach	19.0
	Heat Range	5
	Type	Resistor
	Version	1 Mass Electrode
	Seat	Flat
	Core	Copper

BERU

0002330206 Z255 | 0002330703 Z72 | 14 FR 8 DU | 14 FR-8 DUW

BOSCH

6 FR 8 D | 0 242 219 532 | 0 242 229 659 | FR 10 DC

CHAMPION

OE016/R04 | OE016/T10 | OE093/R04 | OE093/T10
OE153/T10 | RC10YC | RC10YCL | RC10YCX
RC12YC | RC89YCC | RC89YCL | XC12YC
XC92YC

DENSO

K16PR-U

NGK

1667 | 2460 | 5155 | 5675
6233 | 6714 | 7642 | 7938
96628 | BK5E | BK5ES | BK5ESZ
BKR5E | BKR5EN | BKR5ES | BKR5ESZA
BKR5EZ | FR4 | VL35 | VL36
V-Line 35 | V-Line 36

CT5KMMR

		kW				QTY
AUDI						
A8 (4D2, 4D8)	2.8	120	AEJ	07/95 → 03/96		06
	2.8 quattro	120	AEJ	07/95 → 03/96		06
BMW						
3 (E30)	318 i	83	M40 B18 (184E1)	04/89 → 06/94		04
CITROËN						
XSARA	1.6 i	65	NFZ (TU5JP)	04/97 → 09/00		04
XSARA PICASSO	1.6	65	NFZ (TU5JP)	12/99 →		04
		67	NFZ (TU5JP)	06/02 →		04
		70	NFV (TU5JP)	12/99 →		04
DAEWOO						
KORANDO	3.2 4x4	156	M 104.995	01/99 →	→ 07/05	06
MUSSO	3.2 4x4	162	M 104.992	01/99 →		06
FIAT						
ALBEA (172_)	1.4	57	178 F3.011	11/07 →		04
ALBEA (178_)	1.2	44	178 C4.066	09/01 →		04
		44	188 A4.000	09/01 →		04
		54	178 B5.000	09/98 →		04
	1.4	57	350 A1.000	01/07 →		04
		57	178 F3.011	01/07 →		04
	1.4 ELX RST II Flex	60	178 F3.011	06/04 → 10/07		04
	1.4 Flex	60	178 F3.011	06/04 → 10/07		04
	1.6	76	182 B6.000	11/00 →		04
BRAVA (182_)	1.6 16V (182.BU)	76	182 B6.000	01/99 → 12/02		04
BRAVO I (182_)	1.6	76	182 B6.000	09/00 → 10/01		04
DOBLO Cargo (223_)	1.2 (223ZXA1A)	48	223 A5.000	03/01 →	→ 01/04	04
	1.6 16V (223ZXD1A)	76	182 B6.000	10/01 →	→ 12/03	04
DOBLO MPV (119_, 223_)	1.2 (223AXA1A)	48	223 A5.000	03/01 →	→ 01/04	04
	1.6	68	182 B6.000	09/02 →		04
	1.6 16V (223AXD1A)	76	182 B6.000	10/01 →	→ 12/05	04
	1.6 Natural Power	76	182 B6.000	09/02 →	01/04 → 12/05	04
MAREA (185_)	1.6	76	182 B6.000	09/00 → 08/02		04
	1.6 100 16V	76	182 A4.000	09/96 → 05/02		04
MULTIPLA (186_)	1.6	68	182 B6.000	05/04 → 08/05		04
		74	182 B6.000	03/01 → 08/05		04
		76	182 B6.000	09/00 → 06/10		04
	1.6 16V (186AGB1A)	70	182 B6.000	04/02 → 06/10		04
	1.6 16V Bipower (186AMB1A)	76	186 A4.000	04/99 → 06/10	→ 06/03	04
	1.6 16V Bipower (186AXC1A)	76	182 B6.000	10/01 → 06/10		04
	1.6 16V Blupower (186AMA1A)	70	186 A3.000	04/99 → 06/10	→ 06/03	04

MAGNETI MARELLI

CT5KMMR

		kW				QTY
FIAT						
PALIO (178_)	1.2	54	178 B5.000	09/98 →		04
	1.2 (178DYA1A)	44	188 A4.000	02/01 →		04
		44	178 C4.066	02/01 →		04
	1.2 Flex	44	188 A4.000	07/97 → 08/02		04
	1.4	57	350 A1.000	01/07 →		04
		57	178 F3.011	01/07 →		04
	1.4 ELX RST II Flex	60	178 F3.011	06/04 → 10/07		04
	1.4 Flex	60	178 F3.011	06/04 → 10/07		04
	1.6	76	182 B6.000	11/00 →		04
	1.6 16V (178DYC1A06)	76	182 B6.000	02/01 →		04
PALIO (178BX)	1.2	44	178 C4.066	07/97 → 08/02		04
		44	178 B7.045	07/97 → 08/02		04
		44	188 A4.000	07/97 → 08/02		04
PANDA (141_)	1100	40	176 B2.000	02/95 → 09/03		04
		40	187 A1.000	02/95 → 09/03		04
PANDA (169_)	1.1	40	187 A1.000	09/03 →	→ 12/04	04
	1.2	44	188 A4.000	09/03 →	→ 09/04	04
PANDA Van (141_)	1.1	40	187 A1.000	09/00 → 02/04		04
PANDA Van (169_)	1.1	40	187 A1.000	09/04 →	→ 12/04	04
PETRA (178_)	1.2	44	178 C4.066	09/01 →		04
		44	188 A4.000	09/01 →		04
		54	178 B5.000	09/98 →		04
	1.4	57	350 A1.000	01/07 →		04
		57	178 F3.011	01/07 →		04
	1.4 ELX RST II Flex	60	178 F3.011	06/04 → 10/07		04
	1.4 Flex	60	178 F3.011	06/04 → 10/07		04
	1.6	76	182 B6.000	11/00 →		04
PUNTO (188_)	1.2 60 (188.030, .050, .130, .150, .230, .250)	44	188 A4.000	09/99 →		04
	1.2 Natural Power	44	188 A4.000	09/03 →	→ 09/04	04
PUNTO Van (188_)	1.2 60	44	188 A4.000	02/00 → 10/09	→ 09/04	04
SEICENTO / 600 (187_)	1.1 (187AXB, 187AXB1A)	40	187 A1.000	01/98 → 01/10	10/00 → 10/04	04
SIENA (172_)	1.4	57	178 F3.011	11/07 →		04
SIENA (178_)	1.2	44	178 C4.066	09/01 →		04
		44	188 A4.000	09/01 →		04
		54	178 B5.000	09/98 →		04
	1.4	57	350 A1.000	01/07 →		04
		57	178 F3.011	01/07 →		04
	1.4 ELX RST II Flex	60	178 F3.011	06/04 → 10/07		04
	1.4 Flex	60	178 F3.011	06/04 → 10/07		04
	1.6	76	182 B6.000	11/00 →		04
STILO (192_)	1.6 16V (192_XB1A)	76	182 B6.000	10/01 → 11/06		04
STRADA Pick-up (178_)	1.2	44	188 A4.000	04/03 →		04

CT5KMMR

		kW				QTY
HYUNDAI						
i10	1.1	51	G4HG	04/11 →	→ 11/13	04
KIA						
CLARUS	1.8 i 16V	85	T8	07/96 →	→ 07/01	04
CREDOS	1.8 i 16V	85	T8	07/96 →	→ 07/01	04
SEPHIA	1.8 i 16V	81	T8	10/97 → 03/01	→ 08/98	04
		82	OK26Y	01/95 → 10/97		04
		82	OK24N	01/95 → 10/97		04
SHUMA	1.8 i 16V	81	T8	10/97 → 03/01	→ 08/98	04
SPORTAGE	2.0 i 4WD	70	FE (8V)	04/94 → 08/99		04
LANCIA						
DEDRA (835_)	1.6 16V (835EI)	76	182 A4.000	01/96 → 07/99		04
LYBRA (839_)	1.6	76	182 B6.000	10/00 → 10/05		04
	1.6 16V (839AXA1A)	76	182 A4.000	07/99 → 10/05		04
Y (840_)	1.2 (840AA, 840AF1A)	44	188 A4.000	03/96 → 09/03	09/00 →	04
		44	840 A3.000	03/96 → 09/03	09/00 →	04
Y10 (156_)	1.1 Fire Trazione integrale (156AG)	40	176 B2.000	01/95 → 12/95		04
YPSILON (843_)	1.2	44	188 A4.000	10/03 → 12/11	→ 09/04	04
		59	188 A5.000	10/03 → 12/11		04
MAZDA						
323 ASTINA IV	1.6 16V	65	B6	03/91 → 10/94		04
323 C IV	1.6	62	B6E	09/89 → 06/91		04
323 F IV	1.6 16V	65	B6	03/91 → 10/94		04
ASTINA IV	1.6 16V	65	B6	03/91 → 10/94		04
ETUDE IV	1.6	62	B6E	09/89 → 06/91		04
	1.6 16V	65	B6	03/91 → 10/94		04
FAMILIA IV	1.6	62	B6E	09/89 → 06/91		04
	1.6 16V	65	B6	03/91 → 10/94		04
MERCEDES-BENZ						
C CLASS (W202)	C 36 AMG (202.028)	206	M 104.941 (AMG 3.6)	05/94 → 05/00	→ 01/98	06
	C 180 (202.018)	90	M 111.920	03/93 → 05/00	07/97 →	04
		90	M 111.921	03/93 → 05/00	07/97 →	04
	C 200 (202.020)	100	M 111.941	01/94 → 05/00	→ 06/97	04
		100	M 111.945	01/94 → 05/00	→ 06/97	04
	C 200 CGI (202.020)	100	M 111.941	01/94 → 05/00	→ 06/97	04
		100	M 111.945	01/94 → 05/00	→ 06/97	04
	C 200 Kompressor (202.025)	132	M 111.944	10/95 → 05/00		04
		141	M 111.944	11/96 → 05/00		04
	C 220 (202.022)	110	M 111.961	03/93 → 05/00		04
	C 280 (202.028)	142	M 104.941	05/93 → 05/00		06

CT5KMMR

		kW				QTY
MERCEDES-BENZ						
C CLASS Station wagon (S202)	C 180 T (202.078)	90	M 111.920	06/96 → 09/00	07/97 →	04
		90	M 111.921	06/96 → 09/00	07/97 →	04
	C 200 T (202.080)	100	M 111.941	06/96 → 03/01		04
		100	M 111.945	06/96 → 03/01		04
	C 200 T Kompressor (202.082)	141	M 111.944	11/96 → 03/01		04
CABRIOLET (A124)	300 CE-24 (124.061)	162	M 104.980	04/92 → 06/93		06
		170	M 104.980	04/92 → 06/93		06
CLK (C208)	200 Kompressor (208.345)	141	M 111.944	06/97 → 06/00		04
CLK Cabriolet (A208)	200 (208.435)	100	M 111.941	03/98 → 03/02		04
		100	M 111.945	03/98 → 03/02		04
	200 Kompressor (208.445)	141	M 111.944	03/98 → 06/00		04
COUPE (C124)	220 CE (124.042)	110	M 111.960	10/92 → 05/93		04
	300 CE (124.051)	162	M 104.980	09/89 → 12/92		06
	300 CE (124.052)	162	M 104.992	10/92 → 05/93		06
	300 CE-24 (124.051)	162	M 104.980	09/89 → 12/92		06
		170	M 104.980	09/89 → 08/92		06
	320 CE (124.052)	162	M 104.992	10/92 → 05/93		06
E CLASS (W124)	E 36 AMG	200	M 104.992 (AMG 3.6)	07/94 → 01/95		06
	E 200 (124.019)	100	M 111.940	06/93 → 06/95		04
	E 220 (124.022)	110	M 111.960	06/93 → 06/95		04
	E 280 (124.028)	145	M 104.942	06/93 → 06/95		06
	E 280 (124.029)	142	M 104.942	06/93 → 06/95		06
	E 320 (124.032)	162	M 104.992	06/93 → 06/95		06
E CLASS (W210)	E 280 (210.053)	142	M 104.945	01/96 → 06/97		06
	E 320 (210.055)	162	M 104.995	06/95 → 06/97		06
E CLASS Cabriolet (A124)	E 36 AMG (124.066)	200	M 104.992 (AMG 3.6)	05/94 → 03/98		06
	E 200 (124.060)	100	M 111.940	06/93 → 03/98		04
	E 220 (124.062)	110	M 111.960	06/93 → 03/98		04
	E 320 (124.066)	162	M 104.992	06/93 → 03/98		06
E CLASS Coupé (C124)	E 36 AMG (124.052)	195	M 104.992 (AMG 3.6)	06/93 → 04/95		06
		200	M 104.992 (AMG 3.6)	05/94 → 06/97		06
	E 200 (124.040)	100	M 111.940	06/93 → 06/97		04
	E 220 (124.042)	110	M 111.960	06/93 → 06/97		04
	E 320 (124.052)	162	M 104.992	06/93 → 06/97		06

CT5KMMR

		kW				QTY
MERCEDES-BENZ						
E CLASS Station wagon (S124)	E320 (124.092)	162	M 104.992	06/93 → 06/96		06
	E 36 T AMG (124.092)	200	M 104.992 (AMG 3.6)	05/94 → 06/96		06
	E 200 T (124.079)	100	M 111.940	06/93 → 06/96		04
	E 220 T (124.082)	110	M 111.960	06/93 → 06/96		04
	E 280 T (124.088)	142	M 104.942	06/93 → 06/96		06
		145	M 104.942	06/93 → 06/96		06
	E 300 TE-24 AMG (124.091)	162	M 104.980	06/93 → 06/96		06
	E 320 T (124.092)	162	M 104.992	06/93 → 06/96		06
G CLASS (W463)	G 36 AMG (463.230)	200	M 104.996 (AMG 3.6)	01/95 → 07/98		06
	G 320 (463.230, 463.231)	155	M 104.996	09/94 → 10/97		06
	320 GE (463.208)	155	M 104.996	09/94 → 11/97		06
KOMBI Station wagon (S124)	220 TE (124.082)	110	M 111.960	10/92 → 05/93		04
	280 TE (124.088)	145	M 104.942	10/92 → 06/93		06
	300 TE-24 (124.091)	162	M 104.980	09/89 → 08/92		06
		170	M 104.980	09/89 → 08/92		06
	300TE (124.092)	162	M 104.992	10/92 → 06/93		06
	320 TE (124.092)	162	M 104.992	10/92 → 06/93		06
S CLASS (W140)	300 SE 2.8 (140.028)	145	M 104.944	01/93 → 10/98		06
	300 SE, SEL/S320 (140.032, 140.033)	170	M 104.990	03/91 → 10/98		06
		170	M 104.994	03/91 → 10/98		06
	S 280 (140.028)	142	M 104.944	02/93 → 10/98		06
SL (R129)	280 (129.058)	142	M 104.943	08/93 → 10/01		06
	300 SL-24 (129.061)	170	M 104.981	03/89 → 07/93		06
	320 (129.063)	170	M 104.991	09/93 → 10/01		06
	SL 280 (129.058)	142	M 104.943	08/93 → 10/01		06
SLK (R170)	200 Kompressor (170.445)	141	M 111.943	10/96 → 03/00		04
Tre volumi (W124)	200 E (124.019)	100	M 111.940	10/92 → 06/93		04
	220 E (124.022)	110	M 111.960	10/92 → 06/93		04
	280 E (124.028)	145	M 104.942	10/92 → 06/93		06
	300 E (124.028)	145	M 104.942	10/92 → 06/93		06
	300 E-24 (124.031)	162	M 104.980	09/88 → 08/92		06
		170	M 104.980	09/88 → 08/92		06
	320 E (124.032)	162	M 104.992	10/92 →		06
MITSUBISHI						
NIMBUS	2.4 GDI	110	4G64 (GDI)	10/98 → 12/04	→ 04/02	04
		110	4G64 (GDI)	10/98 → 12/04	→ 04/02	04
RVR	2.0 (N63W)	100	4G63 (SOHC 16V)	08/99 → 08/02		04
SPACE RUNNER	2.0 (N63W)	100	4G63 (SOHC 16V)	08/99 → 08/02		04
SPACE WAGON	2.4 GDI	110	4G64 (GDI)	10/98 → 12/04	→ 04/02	04

MAGNETI MARELLI

CT5KMMR

		kW				QTY
NISSAN						
100 NX	1.6	66	GA16DS	03/90 → 10/94	→ 10/92	04
	1.6 SR	75	GA16DE	09/93 → 10/94		04
ALMERA I	1.4	64	GA14DE	09/95 → 07/00		04
	1.4 GX,LX	55	GA14DE	09/95 → 07/00		04
	1.4 S,GX,LX	55	GA14DE	09/95 → 03/00		04
	1.6	73	GA16DE	09/95 → 07/00		04
	1.6 SLX	66	GA16DE	09/95 → 07/00		04
NX/NXR	1.6	66	GA16DS	03/90 → 10/94	→ 10/92	04
	1.6 SR	75	GA16DE	09/93 → 10/94		04
PRIMERA	1.6 16V	66	GA16DE	09/96 → 12/01		04
	1.6 16V	73	GA16DE	09/96 → 10/00		04
PULSAR I	1.4	64	GA14DE	09/95 → 07/00		04
	1.4 GX,LX	55	GA14DE	09/95 → 07/00		04
	1.6	73	GA16DE	09/95 → 07/00		04
	1.6 SLX	66	GA16DE	09/95 → 07/00		04
	1.6 SR,SLX	66	GA16DE	09/95 → 03/00		04
PULSAR III	1.4 i 16V	64	GA14DE	10/90 → 06/95		04
	1.6 i 16V	75	GA16DE	10/92 → 05/95		04
PULSAR V	1.4 i 16V	64	GA14DE	10/90 → 06/95		04
	1.6 i 16V	75	GA16DE	10/92 → 05/95		04
PULSAR VI	1.4	64	GA14DE	09/95 → 03/00		04
	1.6 SR,SLX	66	GA16DE	09/95 → 03/00		04
Q BIC III	1.6 L	75	GA16DE	11/92 → 04/96		04
	1.6 i 16V	66	GA16DE	10/92 → 03/00		04
SABRE III	1.4 i 16V	64	GA14DE	10/90 → 05/95		04
	1.6 i 16V	75	GA16DE	10/92 → 05/95		04
SENTRA I	1.4	64	GA14DE	09/95 → 07/00		04
	1.4 GX,LX	55	GA14DE	09/95 → 07/00		04
	1.6	73	GA16DE	09/95 → 07/00		04
	1.6 SLX	66	GA16DE	09/95 → 07/00		04
SENTRA III	1.4 i 16V	64	GA14DE	10/90 → 06/95		04
	1.6 i 16V	75	GA16DE	10/92 → 05/95		04
SERENA	1.6	71	GA16DE	02/93 → 09/01		04
SUNNY III	1.4 i 16V	64	GA14DE	10/90 → 06/95		04
	1.6 i 16V	75	GA16DE	10/92 → 05/95		04
TSUBAME III	1.6	75	GA16DE	07/95 →		04
VANETTE CARGO	1.6 i	71	GA16DE	01/95 →	→ 11/01	04
		72	GA16DE	01/96 →	→ 11/01	04
VANETTE SERENA	1.6	71	GA16DE	02/93 → 09/01		04
PEUGEOT						
106	1.6	65	NFZ (TU5JP)	06/93 → 04/96		04
106 II	1.6 i	65	NFZ (TU5JP)	05/96 →		04
	1.6 S16	87	NFX (TU5J4)	05/96 →		04
206	1.6 i	65	NFZ (TU5JP)	09/98 → 12/00		04
	1.6 i Soleil	65	NFZ (TU5JP)	09/98 → 12/00		04

CT5KMMR

		kW				QTY
PEUGEOT						
306	1.6	65	NFZ (TU5JP)	05/93 → 10/00		04
	1.6 SR	65	NFZ (TU5JP)	06/94 → 10/00		04
306 Break	1.6	65	NFZ (TU5JP)	03/97 → 10/00		04
306 Cabriolet	1.6	65	NFZ (TU5JP)	04/96 → 10/00		04
SKODA						
FELICIA	1.3	50	136M	06/97 → 04/02	→ 03/01	04
FELICIA II	1.3	43	AMJ	01/98 → 06/01		04
		40	AMG	01/98 → 06/01		04
		50	AMH	01/98 → 06/01		04
SSANGYONG						
CHAIRMAN	2.8	142	M 104.945	08/99 →		06
		145	M 104.942	07/97 →		06
	3.2	162	M 104.992	08/05 → 09/07		06
KORANDO	3.2	156	M 104.995	01/99 →	→ 09/05	06
		162	M 104.992	06/97 →		06
	3.2 (KJ)	154	M 104.995	12/96 →	→ 09/05	06
MUSSO	3.2	162	M 104.992	06/96 →		06

CT5KMMR11

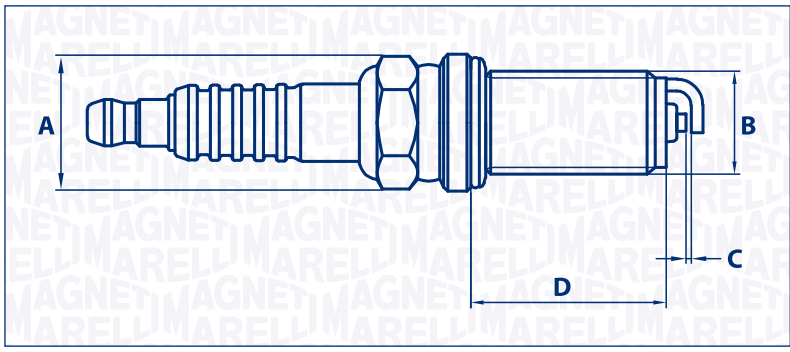

A	Hexagon Size	16
B	Thread Size	M14×1.25
C	Gap (mm)	1.1
D	Thread Reach	19.0
	Heat Range	5
	Type	Resistor
	Version	1 Mass Electrode
	Seat	Flat
	Core	Copper

BERU

0001325705 0001330707 0001330725 0001330731
0002330704 14 F-8 DU0 14 F-9 DU0 14F8DU
14F8DU4 14FR8DUX Z100 Z5
Z71 Z73 Z79

BOSCH

19 0 241 229 712 0 241 229 713 0 242 219 537
0 242 229 660 F 8 DC F 8 DC 4 FR 10 DCX
FR 8 DCX

CHAMPION

C12YCC OE062/T10 OE063/T10 RC10YC4
RC10YCC4 RC12YC4

DENSO

K16PR-U11

NGK

1662 2382 3686 4636
5188 5643 6234 6953
91597 BK5E11 BKR5E-11 BKR5ES11
BKR5ESA11 FR45 VL33 V-Line 33

MAGNETI MARELLI

CT5KMMR11

		kW				QTY
CHEVROLET						
CAPRICE CLASSIC	5.7	138	LO5	10/91 → 09/93		08
DAIHATSU						
CUORE V	1.0 i (L701)	41	EJ-VE	10/98 → 05/03		03
CUORE VI	1.0 i (L701)	41	EJ-DE	10/98 → 05/03		03
MIRA V	1.0 i (L701)	41	EJ-DE	10/98 → 05/03		03
MOVE	1.0 i	41	EJ-DE	10/98 →		03
SIRION	1.0	40	EJ-DE	04/98 → 10/00		03
	1.0 i (M100)	41	EJ-DE	04/98 → 09/00		03
	1.0 i 4WD	41	EJ-DE	04/99 → 09/00		03
STORIA	1.0	40	EJ-DE	04/98 → 10/00		03
	1.0 i (M100)	41	EJ-DE	04/98 → 09/00		03
	1.0 i 4WD	41	EJ-DE	04/99 → 09/00		03
FIAT						
ALBEA (178_)	1.6 16V	78	178 B3.000	09/98 →		04
PALIO (178_)	1.6 16V	78	178 B3.000	09/98 →		04
PETRA (178_)	1.6 16V	78	178 B3.000	09/98 →		04
SIENA (178_)	1.6 16V	78	178 B3.000	09/98 →		04
HYUNDAI						
ACCENT I	1.3	44	G4EH	10/94 → 01/00		04
		55	G4EH	10/94 → 01/00		04
	1.3 i 12V	62	G4EH	10/94 → 01/00		04
	1.5	63	G4EK	10/94 →		04
	1.5 16V	76	G4FK	10/94 →		04
	1.5 i 12V	63	G4EK	10/94 →		04
		65	G4EK	10/94 → 01/00		04
	1.5 i 16V	73	G4ER	12/95 → 01/00		04
ACCENT II	1.3	55	G4EA	01/00 → 11/05	→ 01/03	04
		62	G4EH	08/02 → 11/05		04
		61	G4EA	01/00 → 11/05	→ 01/03	04
		63	G4EA	01/00 → 11/05	→ 01/03	04
	1.5	75	G4FK	09/99 → 10/02		04
		65	G4EK	09/99 → 10/02		04
		66	G4EB	01/00 → 11/05	→ 01/03	04
		75	G4EC-G	09/00 → 11/05	→ 01/03	04
	1.6	77	G4ED-G	12/02 → 11/05		04
ACCENT III	1.4 GL	71	G4EE	11/05 → 11/10		04
	1.6 GLS	82	G4ED	11/05 → 11/10		04
ACCENT IV	1.4 GL	71	G4EE	11/05 → 11/10		04
	1.6 GLS	82	G4ED	11/05 → 11/10		04

CT5KMMR11

		kW				QTY
HYUNDAI						
ATOS	1.0 i	40	G4HC	02/98 → 03/02		04
		41	G4HC	02/98 → 03/02		04
		43	G4HC-E	03/01 →	→ 03/08	04
	1.0 i GLS	40	G4HC	02/98 → 03/02		04
		43	G4HC-E	03/01 →	→ 03/08	04
	1.1	43	G4HD	08/03 → 05/05		04
		45	G4HG	06/03 →	→ 03/08	04
		46	G4HG	03/04 →	→ 03/08	04
ATOS PRIME	1.0 i	40	G4HC	08/99 →		04
		43	G4HC-E	03/01 →		04
	1.0 i GLS	43	G4HC-E	03/01 →		04
	1.1	43	G4HD	06/03 →		04
		46	G4HG	09/05 →		04
ATOZ	1.0 i	40	G4HC	02/98 → 03/02		04
		41	G4HC	02/98 → 03/02		04
		43	G4HC-E	03/01 →	→ 03/08	04
	1.0 i GLS	40	G4HC	02/98 → 03/02		04
		43	G4HC-E	03/01 →	→ 03/08	04
	1.1	43	G4HD	08/03 → 05/05		04
		45	G4HG	06/03 →	→ 03/08	04
		46	G4HG	03/04 →	→ 03/08	04
AVANTE	1.5 16V	75	G4EC-G	09/00 → 07/06		04
	1.6	66	G4GR	06/00 → 07/06		04
		77	G4ED-G	05/03 → 07/06		04
		79	G4ED-G	06/00 → 07/06		04
	1.8	97	G4BB	06/00 → 07/06		04
		97	G4GB	06/00 → 07/06		04
	2.0	102	G4GC-G	06/00 → 07/06		04
		104	G4GC	06/00 → 07/06		04
		105	G4GC	10/03 → 07/06		04
	2.0 CVVT	103	G4GC	06/06 → 05/10		04
		105	G4GC	06/06 → 06/11	→ 12/06	04
	2.0 GLS	105	G4GC	10/03 → 07/06		04
AVANTE II	1.5 12V	65	G4EK	12/96 → 09/00		04
	1.5 16V	76	G4FK	11/95 →		04
	1.6 16V	76	G4ED	11/95 →		04
		84	G4GR	11/95 → 09/00		04
	1.6 i	66	G4GR	11/95 → 09/00		04
	1.8 16V	94	G4GM	11/95 → 09/00		04
	2.0	100	G4JP	04/97 → 05/00		04
	2.0 16V	102	G4GF	08/96 → 09/00		04
AVEGA III	1.4 GL	71	G4EE	11/05 → 11/10		04
	1.6 GLS	82	G4ED	11/05 → 11/10		04

MAGNETI MARELLI

CT5KMMR11

		kW				QTY
HYUNDAI						
CLICK	1.1	46	G4HD	09/02 → 09/05		04
		49	G4HG	09/05 → 06/09	11/06 →	04
		49	G4HD	09/05 → 06/09	11/06 →	04
	1.3	61	G4EA	09/04 → 06/09		04
		63	G4EA	09/03 → 09/05	→ 03/04	04
	1.3 i	60	G4EA	09/02 → 03/04		04
	1.4 i	71	G4EE	08/05 →	11/06 →	04
	1.5 i	73	G4EC-G	09/02 → 10/05		04
		73	G4ER	09/02 → 10/05		04
	1.6	77	G4ED-G	09/02 → 09/05		04
		78	G4ED-G	08/05 →	→ 08/06	04
COUPE	1.6 16V	77	G4ED-G	03/02 → 08/09	→ 08/06	04
		79	G4ED-G	03/02 → 08/09	→ 08/06	04
		85	G4GR	03/98 → 04/02		04
	1.6 i 16V	79	G4ED-G	08/00 → 01/02		04
		84	G4ED	12/96 → 04/02		04
	2.0	100	G4GC-G	08/10 → 08/09	→ 12/06	04
		102	G4GC-G	03/02 → 08/09	09/06 →	04
	2.0 16V	102	G4GF	08/96 → 04/02		04
	2.0 FX	102	G4GF	08/96 → 04/02		04
	2.0 GLS	105	G4GC-G	02/03 → 08/09	→ 12/06	04
	F2 Evolution	115	G4GF	01/99 → 05/99		04
ELANTRA	1.5 16V	75	G4EC-G	09/00 → 07/06		04
	1.6	66	G4GR	06/00 → 07/06		04
		77	G4ED-G	05/03 → 07/06		04
		79	G4ED-G	06/00 → 07/06		04
	1.8	97	G4GB	06/00 → 07/06		04
		97	G4BB	06/00 → 07/06		04
	2.0	102	G4GC-G	06/00 → 07/06		04
		104	G4GC	06/00 → 07/06		04
		105	G4GC	10/03 → 07/06		04
	2.0 CVVT	103	G4GC	06/06 → 05/10		04
		105	G4GC	06/06 → 06/11	→ 12/06	04
	2.0 GLS	105	G4GC	10/03 → 07/06		04
ELANTRA II	1.5 12V	65	G4EK	04/97 → 10/00		04
		65	G4EK	12/96 → 09/00		04
	1.5 16V	76	G4FK	11/95 →		04
	1.6 16V	76	G4ED	11/95 →		04
		84	G4GR	11/95 → 09/00		04
	1.6 i	66	G4GR	11/95 → 09/00		04
	1.8 16V	94	G4GM	11/95 → 09/00		04
	2.0	100	G4JP	04/97 → 05/00		04
	2.0 16V	102	G4GF	08/96 → 09/00		04

CT5KMMR11

		kW				QTY
HYUNDAI						
ELANTRA LAVITA	1.5	75	G4EC-G	06/01 → 08/10		04
	1.6	66	G4ED-L	01/02 → 12/05		04
		76	G4ED-G	06/01 → 08/10	09/06 →	04
	1.8	90	G4GB-G	06/01 → 08/10	→ 08/06	04
EMBERA V	2.0 VVTi GLS	106	G4KA	05/05 →	→ 04/08	04
	2.4	119	G4KC	01/05 →	→ 12/07	04
EXCEL	1.5	63	G4EK	10/94 →		04
	1.5 i 12V	63	G4EK	10/94 →		04
EXCEL I	1.3	55	G4EH	10/94 → 01/00		04
		44	G4EH	10/94 → 01/00		04
	1.3 i 12V	62	G4EH	10/94 → 01/00		04
	1.5 16V	76	G4FK	10/94 →		04
	1.5 i 12V	65	G4EK	10/94 → 01/00		04
	1.5 i 16V	73	G4ER	12/95 → 01/00		04
EXCEL II	1.3	63	G4EA	01/00 → 11/05	→ 01/03	04
		61	G4EA	01/00 → 11/05	→ 01/03	04
		55	G4EA	01/00 → 11/05	→ 01/03	04
		62	G4EH	08/02 → 11/05		04
	1.5	65	G4EK	09/99 → 10/02		04
		66	G4EB	01/00 → 11/05	→ 01/03	04
		75	G4EC-G	09/00 → 11/05	→ 01/03	04
	1.6	77	G4ED-G	12/02 → 11/05		04
GETZ	1.1	46	G4HD	09/02 → 09/05		04
		49	G4HG	09/05 → 06/09	11/06 →	04
		49	G4HD	09/05 → 06/09	11/06 →	04
	1.3	61	G4EA	09/04 → 06/09		04
		63	G4EA	09/03 → 09/05	→ 03/04	04
	1.3 i	60	G4EA	09/02 → 03/04		04
	1.4 i	71	G4EE	08/05 →	11/06 →	04
	1.5 i	73	G4EC-G	09/02 → 10/05		04
		73	G4ER	09/02 → 10/05		04
	1.6	77	G4ED-G	09/02 → 09/05		04
		78	G4ED-G	08/05 →	→ 08/06	04
GETZ PRIME	1.1	46	G4HD	09/02 → 09/05		04
		49	G4HG	09/05 → 06/09	11/06 →	04
		49	G4HD	09/05 → 06/09	11/06 →	04
	1.3	61	G4EA	09/04 → 06/09		04
		63	G4EA	09/03 → 09/05	→ 03/04	04
	1.3 i	60	G4EA	09/02 → 03/04		04
	1.4 i	71	G4EE	08/05 →	11/06 →	04
	1.5 i	73	G4EC-G	09/02 → 10/05		04
		73	G4ER	09/02 → 10/05		04
	1.6	77	G4ED-G	09/02 → 09/05		04
		78	G4ED-G	08/05 →	→ 08/06	04

MAGNETI MARELLI

CT5KMMR11

		kW				QTY
HYUNDAI						
HIGHWAY VAN	2.0 16V	100	G4JP	03/00 →	→ 02/04	04
	2.0 CVVT	00	G4GC	11/03 → 03/04		
	2.7 V6 24V	125	G6BA	03/00 →	→ 02/04	06
i10	1.1	48	G4HG	12/07 →	→ 11/10	04
		49	G4HG	01/08 →	→ 11/10	04
JM	2.0	104	G4GC	08/04 → 03/10	→ 12/06	04
		105	G4GC	01/10 → 03/10		04
	2.0 GLS	105	G4GC	01/10 → 03/10		04
	2.0 Trazione integrale	100	G4GC	07/05 → 11/10		
		104	G4GC	08/04 → 03/10	→ 12/06	04
LANTRA II	1.5 12V	65	G4EK	12/96 → 09/00		04
	1.5 16V	76	G4FK	11/95 →		04
	1.6 16V	76	G4ED	11/95 →		04
		84	G4GR	11/95 → 09/00		04
	1.6 i	66	G4GR	11/95 → 09/00		04
	1.8 16V	94	G4GM	11/95 → 09/00		04
	2.0	100	G4JP	04/97 → 05/00		04
	2.0 16V	102	G4GF	08/96 → 09/00		04
LAVITA	1.5	75	G4EC-G	06/01 → 08/10		04
	1.6	66	G4ED-L	01/02 → 12/05		04
		76	G4ED-G	06/01 → 08/10	09/06 →	04
	1.8	90	G4GB-G	06/01 → 08/10	→ 08/06	04
MATRIX	1.5	75	G4EC-G	06/01 → 08/10		04
	1.6	66	G4ED-L	01/02 → 12/05		04
		76	G4ED-G	06/01 → 08/10	09/06 →	04
	1.8	90	G4GB-G	06/01 → 08/10	→ 08/06	04
NF V	2.0 VVTi GLS	106	G4KA	05/05 →	→ 04/08	04
PONY I	1.3	44	G4EH	10/94 → 01/00		04
		55	G4EH	10/94 → 01/00		04
	1.3 i 12V	62	G4EH	10/94 → 01/00		04
	1.5	63	G4EK	10/94 →		04
	1.5 16V	76	G4FK	10/94 →		04
	1.5 i 12V	63	G4EK	10/94 →		04
		65	G4EK	10/94 → 01/00		04
	1.5 i 16V	73	G4ER	12/95 → 01/00		04
PRIME	1.0 i	40	G4HC	02/98 → 03/02		04
		41	G4HC	02/98 → 03/02		04
		43	G4HC-E	03/01 →	→ 03/08	04
	1.0 i GLS	40	G4HC	02/98 → 03/02		04
		43	G4HC-E	03/01 →	→ 03/08	04
	1.1	43	G4HD	08/03 → 05/05		04
		45	G4HG	06/03 →	→ 03/08	04
		46	G4HG	03/04 →	→ 03/08	04
S COUPE	1.5 i	65	G4EK	04/92 → 05/96		04
SANTA FÉ I	2.7 V6 4x4	127	G6BA-G	02/01 → 03/06		06

CT5KMMR11

		kW				QTY
HYUNDAI						
SANTRO	1.0 i	40	G4HC	02/98 → 03/02		04
		41	G4HC	02/98 → 03/02		04
		43	G4HC-E	03/01 →	→ 03/08	04
	1.0 i GLS	40	G4HC	02/98 → 03/02		04
		43	G4HC-E	03/01 →	→ 03/08	04
	1.1	43	G4HD	08/03 → 05/05		04
		45	G4HG	06/03 →	→ 03/08	04
		46	G4HG	03/04 →	→ 03/08	04
SONATA V	2.0 VVTi GLS	106	G4KA	05/05 →	→ 04/08	04
TB	1.1	46	G4HD	09/02 → 09/05		04
		49	G4HG	09/05 → 06/09	11/06 →	04
		49	G4HD	09/05 → 06/09	11/06 →	04
	1.3	61	G4EA	09/04 → 06/09		04
		63	G4EA	09/03 → 09/05	→ 03/04	04
	1.3 i	60	G4EA	09/02 → 03/04		04
	1.4 i	71	G4EE	08/05 →	11/06 →	04
	1.5 i	73	G4EC-G	09/02 → 10/05		04
		73	G4ER	09/02 → 10/05		04
	1.6	77	G4ED-G	09/02 → 09/05		04
		78	G4ED-G	08/05 →	→ 08/06	04
TERRACAN	3.5 i V6 4WD	143	G6CU	12/01 → 12/06	→ 02/02	06
TIBURON	1.6 16V	79	G4ED-G	03/02 → 08/09	→ 08/06	04
		77	G4ED-G	03/02 → 08/09	→ 08/06	04
		85	G4GR	03/98 → 04/02		04
	1.6 i 16V	84	G4ED	12/96 → 04/02		04
	2.0	100	G4GC-G	08/10 → 08/09	→ 12/06	04
		102	G4GC-G	03/02 → 08/09	09/06 →	04
	2.0 16V	102	G4GF	08/96 → 04/02		04
	2.0 FX	102	G4GF	08/96 → 04/02		04
	2.0 GLS	105	G4GC-G	02/03 → 08/09	→ 12/06	04
TRAJET	2.0	103	G4GC-G	01/04 → 07/08	09/06 →	04
		104	G4GC	11/03 → 07/08	→ 12/06	04
	2.0 GL	103	G4GC-G	01/04 → 07/08	09/06 →	04
	2.7 GLS V6	127	G6BA-G	09/00 → 07/08	03/04 → 06/07	06
	2.7 V6	127	G6BA-G	09/00 → 07/08	03/04 → 06/07	06
TUCSON	2.0	104	G4GC	08/04 → 03/10	→ 12/06	04
		105	G4GC	01/10 → 03/10		04
	2.0 GLS	105	G4GC	01/10 → 03/10		04
	2.0 Trazione integrale	104	G4GC	08/04 → 03/10	→ 12/06	04
		104	G4GC	07/05 → 11/10		04
TUSCANI	1.6 16V	77	G4ED-G	03/02 → 08/09	→ 08/06	04
		79	G4ED-G	03/02 → 08/09	→ 08/06	04
	2.0	100	G4GC-G	08/10 → 08/09	→ 12/06	04
		102	G4GC-G	03/02 → 08/09	09/06 →	04
	2.0 GLS	105	G4GC-G	02/03 → 08/09	→ 12/06	04

MAGNETI MARELLI

CT5KMMR11

		kW				QTY
HYUNDAI						
VERNA II	1.3	55	G4EA	01/00 → 11/05	→ 01/03	04
		61	G4EA	01/00 → 11/05	→ 01/03	04
		62	G4EH	08/02 → 11/05		04
		63	G4EA	01/00 → 11/05	→ 01/03	04
	1.5	65	G4EK	09/99 → 10/02		04
		66	G4EB	01/00 → 11/05	→ 01/03	04
		75	G4FK	09/99 → 10/02		04
		75	G4EC-G	09/00 → 11/05	→ 01/03	04
	1.6	77	G4ED-G	12/02 → 11/05		04
VERNA III	1.4 GL	71	G4EE	11/05 → 11/10		04
	1.6 GLS	82	G4ED	11/05 → 11/10		04
INFINITI						
QX	3.3	125	VG33E	01/97 →		06
QX4	3.3	125	VG33E	01/97 →		06
KIA						
CARENS II	2.0 CVVT	102	G4GC	08/04 →	09/06 →	04
CARENS III	2.0 CVVT	106	G4KA	09/06 →		04
CERATO	1.6	77	G4ED	07/04 →	→ 12/08	04
	1.6 16V	77	G4ED	04/04 →	→ 12/08	04
	2.0	105	G4GC	04/04 →	→ 12/08	04
MAGENTIS	2.0	106	G4KA	11/05 →	→ 05/08	04
MORNING	1.0	45	G4HE	04/04 →	→ 12/07	04
		46	G4HE	11/09 →	→ 04/11	04
	1.0 EX	45	G4HE	04/04 →	→ 12/07	04
	1.1	48	G4HG	04/04 →	→ 01/11	04
	1.1 EX	48	G4HG	04/04 →	→ 01/11	04
OPTIMA	2.0	106	G4KA	11/05 →	→ 05/08	04
PICANTO	1.0	45	G4HE	04/04 →	→ 12/07	04
		46	G4HE	11/09 →	→ 04/11	04
	1.0 EX	45	G4HE	04/04 →	→ 12/07	04
	1.1	48	G4HG	04/04 →	→ 01/11	04
	1.1 EX	48	G4HG	04/04 →	→ 01/11	04
PRIDE	1.6 CVVT LX	82	G4ED	03/05 →		04
PRIDE II	1.4 16V	71	G4EE	03/05 →		04
	1.6 CVVT	82	G4ED	03/05 →		04
RIO II	1.4 16V	71	G4EE	03/05 →		04
	1.6 CVVT	82	G4ED	03/05 →		04
RONDO III	2.0 CVVT	106	G4KA	09/06 →		04
SEPHIA	1.5	59	OK280	03/96 → 12/98	09/98 →	04
	1.5 i 16V	65	ZYVE	10/97 → 10/01	04/99 →	04
	1.5 i 16V	65	BFD	10/97 → 03/01		04
	1.6	75	GA6D	10/05 → 12/01		04

CT5KMMR11

		kW				QTY
KIA						
SHUMA	1.5	59	OK280	03/96 → 12/98	09/98 →	04
	1.5 i 16V	65	BFD	10/97 → 03/01		04
		65	ZYVE	10/97 → 03/01		04
	1.6	75	GA6D	10/05 → 12/01		04
SHUMA II	1.6	75	GA6D	05/01 → 08/04		04
SPECTRA	1.6	77	G4ED	04/04 →	→ 12/08	04
	1.6 16V	77	G4ED	04/04 →	→ 12/08	04
	2.0	105	G4GC	04/04 →	→ 12/08	04
SPECTRA II	1.6	75	GA6D	05/01 → 08/04		04
SPORTAGE	2.0 16V 4WD	104	G4GC	09/04 →	09/06 →	04
	2.0 i 16V	104	G4GC	09/04 →	→ 12/06	04
MAZDA						
3	1.4	62	ZJ-VE	10/03 → 06/09	03/06 →	04
	1.6	77	B6ZE	10/03 → 06/09	→ 02/06	04
	1.6 MZR	77	Z6	06/09 →	11/11 →	04
30X	1.6 i	65	B69	07/91 →	→ 10/93	04
		79	B6D	01/94 →		04
	1.8 i V6	98	K819	01/92 → 01/94		06
121 II	1.3 i 16V	53	B3 (16V)	11/90 → 03/96		04
121 METRO	1.3 16V	46	B3 ME	08/98 →	→ 07/07	04
	1.3 i 16V	53	B3 (16V)	08/98 → 04/00		04
	1.5 16V	55	B5 E	04/00 → 07/03		04
323 ASTINA V	1.3 16V	54	B3 (16V)	08/94 → 09/98		04
	1.5 16V	65	Z5-DE	07/94 → 09/98		04
	1.8 16V	84	BP-ZE	08/94 → 09/98		04
323 ASTINA VI	1.4	53	B3 (16V)	01/01 → 05/04		04
	1.4 16V	54	B3 ME	09/98 → 01/01		04
	1.5 16V	65	ZL05	09/98 → 01/01		04
		65	ZL06	09/98 → 01/01		04
	1.8 Astina	92	BP (DOHC)	09/98 → 05/04		04
	1.9 16V	84	FP	09/98 → 01/01		04
		84	FP55	09/98 → 01/01		04
323 C IV	1.3 16V	54	B3 (16V)	09/89 → 07/94		04
	1.8 16V GT	94	BP (DOHC)	09/89 → 03/93		04
323 C V	1.3 16V	54	B3 (16V)	08/94 → 09/98		04
	1.5 16V	65	Z5-DE	08/94 → 09/98		04
	1.8 16V	84	BP-ZE	08/94 → 09/98		04
323 F V	1.5 16V	65	Z5-DE	07/94 → 09/98		04
	1.8 16V	84	BP-ZE	08/94 → 09/98		04

MAGNETI MARELLI

CT5KMMR11

		kW				QTY
MAZDA						
323 F VI	1.4	53	B3 (16V)	01/01 → 05/04		04
	1.4 16V	54	B3 ME	09/98 → 01/01		04
	1.5 16V	65	ZL05	09/98 → 01/01		04
		65	ZL06	09/98 → 01/01		04
	1.8 Astina	92	BP (DOHC)	09/98 → 05/04		04
	1.9 16V	84	FP	09/98 → 01/01		04
		84	FP55	09/98 → 01/01		04
323 IV	1.3 16V	54	B3 (16V)	04/91 → 07/94		04
323 PROTÉGÉ V	1.3 16V	54	B3 (16V)	08/94 → 09/98		04
	1.5 16V	65	Z5-DE	08/94 → 09/98		04
	1.6	80	B6 (DOHC)	08/94 → 09/98		04
	1.6 Protégé	80	B6 (DOHC)	08/94 → 09/98		04
	1.8	92	BP (DOHC)	07/94 → 09/98		04
	1.8 16V	84	BP-ZE	08/94 → 09/98		04
	1.8 Protégé	92	BP (DOHC)	07/94 → 09/98		04
323 PROTÉGÉ VI	1.4	53	B3 (16V)	01/01 → 05/04		04
	1.4 16V	54	B3 ME	09/98 → 01/01		04
	1.5 16V	65	ZL06	09/98 → 01/01		04
		65	ZL05	09/98 → 01/01		04
	1.8 Protégé	92	BP (DOHC)	05/98 → 05/04		04
	1.9 16V	84	FP55	09/98 → 05/04		04
		84	FP	09/98 → 05/04		04
323 S IV	1.3 16V	54	B3 (16V)	04/91 → 07/94		04
323 S V	1.3 16V	54	B3 (16V)	08/94 → 09/98		04
	1.5 16V	65	Z5-DE	08/94 → 09/98		04
	1.6	80	B6 (DOHC)	08/94 → 09/98		04
	1.6 Protégé	80	B6 (DOHC)	08/94 → 09/98		04
	1.8	92	BP (DOHC)	07/94 → 09/98		04
	1.8 16V	84	BP-ZE	08/94 → 09/98		04
	1.8 Protégé	92	BP (DOHC)	07/94 → 09/98		04
323 S VI	1.4	53	B3 (16V)	01/01 → 05/04		04
	1.4 16V	54	B3 ME	09/98 → 01/01		04
		54	B3 ME	09/98 → 01/01		04
	1.5 16V	65	ZL06	09/98 → 01/01		04
		65	ZL05	09/98 → 01/01		04
	1.8 Protégé	92	BP (DOHC)	05/98 → 05/04		04
	1.9 16V	84	FP55	09/98 → 05/04		04
		84	FP	09/98 → 05/04		04
626 IV	1.8 i	77	FP	01/92 → 04/97		04
		78	FP	05/94 → 06/97		04

CT5KMMR11

		kW				QTY
MAZDA						
ALLEGRO VI	1.4	53	B3 (16V)	01/01 → 05/04		04
	1.4 16V	54	B3 ME	09/98 → 01/01		04
		54	B3 ME	09/98 → 01/01		04
	1.5 16V	65	ZL06	09/98 → 01/01		04
		65	ZL05	09/98 → 01/01		04
	1.8 Protégé	92	BP (DOHC)	05/98 → 05/04		04
	1.9 16V	84	FP55	09/98 → 05/04		04
		84	FP	09/98 → 05/04		04
AXELA	1.4	62	ZJ-VE	10/03 → 06/09	03/06 →	04
	1.6	77	B6ZE	10/03 → 06/09	→ 02/06	04
	1.6 MZR	77	Z6	06/09 →	11/11 →	04
DEMIO	1.3 16V	46	B3 ME	08/98 →	→ 07/07	04
	1.3 i 16V	53	B3 (16V)	08/98 → 04/00		04
	1.5 16V	55	B5 E	04/00 → 07/03		04
ETUDE IV	1.3 16V	54	B3 (16V)	09/89 → 07/94		04
	1.8 16V GT	94	BP (DOHC)	09/89 → 03/93		04
ETUDE V	1.3 16V	54	B3 (16V)	08/94 → 09/98		04
	1.5 16V	65	Z5-DE	08/94 → 09/98		04
	1.6	80	B6 (DOHC)	08/94 → 09/98		04
	1.6 Protégé	80	B6 (DOHC)	08/94 → 09/98		04
	1.8	92	BP (DOHC)	07/94 → 09/98		04
	1.8 16V	84	BP-ZE	08/94 → 09/98		04
	1.8 Protégé	92	BP (DOHC)	07/94 → 09/98		04
ETUDE VI	1.4	53	B3 (16V)	01/01 → 05/04		04
		53	B3 (16V)	01/01 → 05/04		04
	1.4 16V	54	B3 ME	09/98 → 01/01		04
	1.5 16V	65	ZL05	09/98 → 01/01		04
		65	ZL06	09/98 → 01/01		04
	1.8 Astina	92	BP (DOHC)	09/98 → 05/04		04
	1.9 16V	84	FP	09/98 → 01/01		04
		84	FP55	09/98 → 01/01		04
FAMILIA / LANTIS V	1.5 16V	65	Z5-DE	07/94 → 09/98		04
	1.8 16V	84	BP-ZE	08/94 → 09/98		04
FAMILIA IV	1.3 16V	54	B3 (16V)	04/91 → 07/94		04
		54	B3 (16V)	09/89 → 07/94		04
	1.8 16V GT	94	BP (DOHC)	09/89 → 03/93		04
FAMILIA V	1.3 16V	54	B3 (16V)	08/94 → 09/98		04
	1.5 16V	65	Z5-DE	07/94 → 09/98		04
	1.6	80	B6 (DOHC)	08/94 → 09/98		04
	1.6 Protégé	80	B6 (DOHC)	08/94 → 09/98		04
	1.8	92	BP (DOHC)	07/94 → 09/98		04
	1.8 16V	84	BP-ZE	08/94 → 09/98		04
	1.8 Protégé	92	BP (DOHC)	07/94 → 09/98		04

MAGNETI MARELLI

CT5KMMR11

		kW				QTY
MAZDA						
FAMILIA VI	1.4	53	B3 (16V)	01/01 → 05/04		04
	1.4 16V	54	B3 ME	09/98 → 01/01		04
	1.5 16V	65	ZL05	09/98 → 01/01		04
		65	ZL06	09/98 → 01/01		04
	1.8 Astina	92	BP (DOHC)	09/98 → 05/04		04
	1.8 Protégé	92	BP (DOHC)	05/98 → 05/04		04
	1.9 16V	84	FP	09/98 → 01/01		04
		84	FP55	09/98 → 01/01		04
		84	FP55	09/98 → 05/04		04
		84	FP	09/98 → 05/04		04
LANTIS V	1.5 16V	65	Z5-DE	07/94 → 09/98		04
	1.8 16V	84	BP-ZE	08/94 → 09/98		04
MIATA II	1.6 16V	81	B6D	05/98 → 10/05		04
MILLENIA	2.0 24V	105	KF	08/93 → 01/00		06
MX-3	1.6 i	65	B69	07/91 →	→ 10/93	04
		79	B6D	01/94 →		04
	1.8 i V6	98	K819	01/92 → 01/94		06
MX-5 II	1.6 16V	81	B6D	05/98 → 10/05		04
MX-6	2.0	85	FS	02/92 → 02/97		04
PREMACY	1.9	74	FP	07/99 → 03/05	→ 06/01	04
		84	FP	07/99 → 03/05	→ 06/01	04
PROTÉGÉ IV	1.3 16V	54	B3 (16V)	04/91 → 07/94		04
PROTÉGÉ V	1.3 16V	54	B3 (16V)	08/94 → 09/98		04
	1.5 16V	65	Z5-DE	08/94 → 09/98		04
	1.6	80	B6 (DOHC)	08/94 → 09/98		04
	1.6 Protégé	80	B6 (DOHC)	08/94 → 09/98		04
	1.8	92	BP (DOHC)	07/94 → 09/98		04
	1.8 16V	84	BP-ZE	08/94 → 09/98		04
	1.8 Protégé	92	BP (DOHC)	07/94 → 09/98		04
PROTÉGÉ VI	1.4	53	B3 (16V)	01/01 → 05/04		04
	1.4 16V	54	B3 ME	09/98 → 01/01		04
		54	B3 ME	09/98 → 01/01		04
	1.5 16V	65	ZL06	09/98 → 01/01		04
		65	ZL05	09/98 → 01/01		04
	1.8 Protégé	92	BP (DOHC)	05/98 → 05/04		04
	1.9 16V	84	FP55	09/98 → 05/04		04
		84	FP	09/98 → 05/04		04
ROADSTER II	1.6 16V	81	B6D	05/98 → 10/05		04
TELSTAR IV	1.8 i	77	FP	01/92 → 04/97		04
		78	FP	05/94 → 06/97		04
VERISA	1.5	83	ZY-VE	07/04 →	→ 09/06	04
XEDOS 6	1.6 16V	79	B6 (DOHC)	06/94 → 10/99		04
XEDOS 9	2.0 24V	105	KF	08/93 → 01/00		06

CT5KMMR11

		kW				QTY
MERCEDES-BENZ						
CL CLASS Coupé (C140)	600 S/SEC (140.076)	290	M 120.980	09/92 → 02/99		12
		290	M 120.982	09/92 → 02/99		12
	SEC/CL 600 (140.076)	290	M 120.980	09/92 → 02/99		12
		290	M 120.982	09/92 → 02/99		12
S CLASS (W140)	600 SE, SEL (140.056, 140.057)	300	M 120.980	04/91 → 12/92		12
		300	M 120.982	04/91 → 12/92		12
	S 600 (140.056, 140.057)	290	M 120.980	01/93 → 10/98		12
		290	M 120.982	01/93 → 10/98		12
	S 600 / 600 SEL (140.056, 140.057))	290	M 120.980	01/93 → 10/98		12
		290	M 120.982	01/93 → 10/98		12
S CLASS Coupé (C140)	600 S/SEC (140.076)	290	M 120.982	09/92 → 02/99		12
		290	M 120.980	09/92 → 02/99		12
	SEC/CL 600 (140.076)	290	M 120.980	09/92 → 02/99		12
		290	M 120.982	09/92 → 02/99		12
SL (R129)	600 (129.076)	290	M 120.983	07/94 → 10/01		12
		290	M 120.981	07/94 → 10/01		12
	600 SL	300	M 120.981	02/92 → 08/94		12
		300	M 120.983	02/92 → 08/94		12
MITSUBISHI						
COLT	2.0 (K62T)	90	4G63 (SOHC 16V)	06/96 → 12/07	→ 06/01	04
	2.4 4WD (K75T)	97	4G64 (SOHC 16V)	06/96 → 12/07		04
COLT IV	1.6 (CA4A)	66	4G92 (SOHC 16V)	02/94 → 04/96		04
	1.6 4WD (CC4A)	84	4G92 (SOHC 16V)	08/93 → 08/95	12/93 →	04
	1.6 GLXi 16V (CA4A)	83	4G92 (SOHC 16V)	04/92 → 04/96	12/93 →	04
COLT V	1.6 GLX 16V (CJ4A)	66	4G92 (SOHC 16V)	05/96 → 09/00	→ 05/99	04
	1600 GLX (CJ4A)	66	4G92 (SOHC 16V)	05/96 → 09/00	→ 05/99	04
DELICA III	2.0 i (P00W, P03W, P13W)	83	4G63 (SOHC 16V)	07/96 →	→ 08/97	04
ETERNA V	1.8 (E52A)	85	4G93 (SOHC 16V)	02/94 → 08/96		04
IO	1.8 (H76W, H66W)	84	4G93 (SOHC 16V)	11/01 → 06/07	→ 02/05	04
L 200	2.0 (K62T)	90	4G63 (SOHC 16V)	06/96 → 12/07	→ 06/01	04
	2.4 4WD (K75T)	97	4G64 (SOHC 16V)	06/96 → 12/07		04
L 300 III	2.0 i (P00W, P03W, P13W)	83	4G63 (SOHC 16V)	07/96 →	→ 08/97	04
L 400	2.4	97	4G64 (SOHC 16V)	06/96 → 10/02	→ 01/01	04
	2.4 i 4WD (PD4V/W)	97	4G64 (SOHC 16V)	05/95 → 05/00	→ 11/98	04
LANCER V	1.6 (CB4A)	66	4G92 (SOHC 16V)	02/94 → 12/96		04
	1.6 16V (CB4A)	83	4G92 (SOHC 16V)	06/92 → 12/96	12/93 →	04
	1.6 16V (CB4W)	83	4G92 (SOHC 16V)	12/92 → 10/03	12/93 →	04
	1.6 16V 4WD (CD4A)	83	4G92 (SOHC 16V)	06/92 → 12/96	12/93 →	04
	1.6 16V 4WD (CD4W)	83	4G92 (SOHC 16V)	12/92 → 10/03	12/93 →	04
	1.6 GLX 16V (CB4A)	83	4G92 (SOHC 16V)	06/92 → 12/96	12/93 →	04
LANCER VI	1.6 16V (CK4A)	66	4G92 (SOHC 16V)	12/95 → 08/03	→ 05/99	04

MAGNETI MARELLI

CT5KMMR11

		kW				QTY
MITSUBISHI						
LIBERO V	1.6 (CB4A)	66	4G92 (SOHC 16V)	02/94 → 12/96		04
	1.6 16V (CB4A)	83	4G92 (SOHC 16V)	06/92 → 12/96	12/93 →	04
	1.6 16V 4WD (CD4A)	83	4G92 (SOHC 16V)	06/92 → 12/96	12/93 →	04
	1.6 GLX 16V (CB4A)	83	4G92 (SOHC 16V)	06/92 → 12/96	12/93 →	04
MIRAGE V	1.6 GLX 16V (CJ4A)	66	4G92 (SOHC 16V)	05/96 → 09/00	→ 05/99	04
	1600 GLX (CJ4A)	66	4G92 (SOHC 16V)	05/96 → 09/00	→ 05/99	04
MONTERO	2.4 (V21W, V21C)	82	4G64 (12V)	04/91 → 10/99		04
MONTERO II	2.4 (V41W, V21W, V21C)	82	4G64 (12V)	04/91 → 04/00		04
	2.4 (V21W, V21C)	82	4G64 (12V)	04/91 → 10/99		04
MONTERO IO	1.8 (H76W, H66W)	84	4G93 (SOHC 16V)	11/01 → 06/07	→ 02/05	04
PAJERO	2.4 (V21W, V21C)	82	4G64 (12V)	04/91 → 10/99		04
	2.4 (V41W, V21W, V21C)	82	4G64 (12V)	04/91 → 04/00		04
PAJERO II	2.4 (V21W, V21C)	82	4G64 (12V)	04/91 → 10/99		04
PAJERO IO	1.8 (H76W, H66W)	84	4G93 (SOHC 16V)	11/01 → 06/07	→ 02/05	04
SAPPORO III	2.4 (E16A)	91	4G64 (8V)	06/87 → 08/90		04
SHOGUN II	2.4 (V21W, V21C)	82	4G64 (12V)	04/91 → 10/99		04
SPACE STAR MPV	1.3 16V (DG1A)	61	4G13 (16V)	12/98 → 12/04	→ 05/00	04
	1.3 16V (DG1A)	63	4G13 (16V)	06/98 → 12/04	→ 05/00	04
	1.8 MPI	82	4G93 (DOHC 16V)	10/02 → 12/04		04
STRADA	2.0 (K62T)	90	4G63 (SOHC 16V)	06/96 → 12/07	→ 06/01	04
	2.4 4WD (K75T)	97	4G64 (SOHC 16V)	06/96 → 12/07		04
TRITON Pick-up	2.0 (K62T)	90	4G63 (SOHC 16V)	06/96 → 12/07	→ 06/01	04
	2.4 4WD (K75T)	97	4G64 (SOHC 16V)	06/96 → 12/07		04
NISSAN						
ALMERA II	1.5	66	QG15DE	07/00 →	→ 09/02	04
	1.8	84	QG18DE	07/00 →	→ 09/02	04
ALMERA TINO	1.8	84	QG18DE	08/00 →	→ 09/02	04
DATSUN	2.4 i	88	KA24E	02/98 →	11/01 →	04
	2.4 i 4WD	98	KA24DE	03/02 →		04
MARCH II	1.0 i 16V	40	CG10DE	08/92 → 09/00		04
		44	CG10DE	09/00 → 02/03		04
	1.3 i 16V	55	CG13DE	08/92 → 09/00		04
	1.4 i 16V	60	CGA3DE	09/00 → 02/03		04
MICRA II	1.0 i 16V	40	CG10DE	08/92 → 09/00		04
		44	CG10DE	09/00 → 02/03		04
	1.3 i 16V	55	CG13DE	08/92 → 09/00		04
	1.4 i 16V	60	CGA3DE	09/00 → 02/03		04
NAVARA	2.4 i	88	KA24E	02/98 →	11/01 →	04
	2.4 i 4WD	98	KA24DE	03/02 →		04
PICK UP	2.4 i	88	KA24E	02/98 →	11/01 →	04
	2.4 i 4WD	98	KA24DE	03/02 →		04
PRIMERA	1.8 16V	84	QG18DE	08/99 → 12/01		04

CT5KMMR11

		kW				QTY
NISSAN						
PULSAR II	1.5	66	QG15DE	07/00 →	→ 09/02	04
	1.8	84	QG18DE	07/00 →	→ 09/02	04
PULSAR VII	1.5	66	QG15DE	03/00 →	→ 09/02	04
	1.8	84	QG18DE	01/00 →	→ 09/02	04
SENTRA I	1.5	77	QG15DE	08/00 → 08/05		04
SENTRA II	1.5	66	QG15DE	03/00 →	→ 09/02	04
	1.8	84	QG18DE	01/00 →	→ 09/02	04
SUNNY I	1.5	77	QG15DE	08/00 → 08/05		04
SUNNY II	1.5	66	QG15DE	07/00 →	→ 09/02	04
	1.8	84	QG18DE	07/00 →	→ 09/02	04
TINO	1.8	84	QG18DE	08/00 →	→ 09/02	04
TSUBAME	1.5	66	QG15DE	05/99 → 08/04		04
OPEL						
FRONTERA B	2.2 i (6B_ZC, 6B_VF, 6B_66, 6B_76)	100	Y 22 SE	10/98 →	→ 07/05	04
		100	X 22 SE	10/98 →	→ 07/05	04
SUBARU						
FORESTER	2.0 AWD	90	EJ202	08/97 → 09/02	→ 06/98	04
IMPREZA	2.0 AWD	85	EJ20E	12/95 → 12/00	→ 09/98	04
		85	EJ201	12/95 → 12/00	→ 09/98	04
	2.0 i 16V AWD	92	EJ20E	06/98 → 12/00		04
	2.0 i AWD	85	EJ20E	12/95 → 12/00	→ 09/98	04
		92	EJ201	06/98 → 12/00		04
		85	EJ201	12/95 → 12/00	→ 09/98	04
LEGACY III	2.0 AWD	92	EJ201	04/99 → 08/03		04
	2.5 AWD	115	EJ25	10/98 → 08/03		04
LIBERTY III	2.0 AWD	92	EJ201	04/99 → 08/03		04
	2.5 AWD	115	EJ25	10/98 → 08/03		04
LIBERTY OUTBACK	2.5 AWD	115	EJ25	10/00 → 08/03		04
OUTBACK	2.5 AWD	115	EJ25	10/00 → 08/03		04
VIVIO	0.7	32	EN07E	08/92 → 12/98	→ 10/95	04
	660 i GLI	32	EN07E	08/92 → 12/98	→ 10/95	04
VAUXHALL						
FRONTERA Mk II (B)	2.2 i	100	Y 22 SE	10/98 → 10/04		04
		100	X 22 SE	10/98 → 10/04		04

MAGNETI MARELLI

CT5KMR

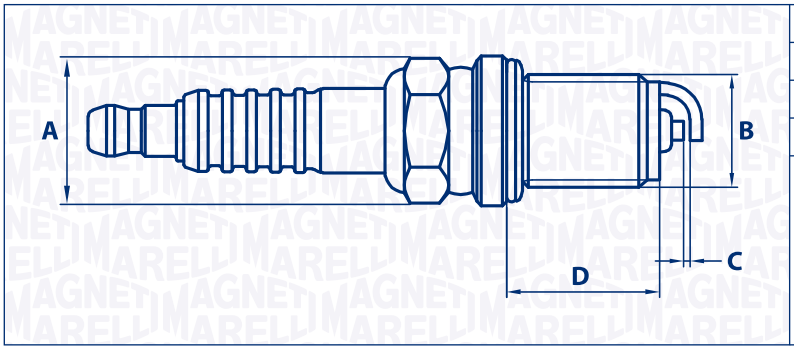

A	Hexagon Size	16
B	Thread Size	M14×1.25
C	Gap (mm)	0.8
D	Thread Reach	19.0
	Heat Range	5
	Type	Resistor
	Version	1 Mass Electrode
	Seat	Flat
	Core	Copper

BERU

0002330713 Z153 | 0002330714 Z154 | 14 FR-8 KU0 | 14FR8KU

BOSCH

43 | 0 242 229 798 | FR 8 KC

DENSO

K16R-U

NGK

2087 | 7390 | BKR5EY | BKR5EYA

		kW				QTY
BMW						
3 (E30)	316 i	73	M40 B16 (164E1)	09/87 → 06/91		04
	318 i	83	M40 B18 (184E1)	09/87 → 06/91		04
		85	M40 B18 (184E1)	09/87 → 06/91		04
7 (E32)	750 i,iL V12	220	M70 B50 (5012A)	09/87 → 09/94		12
NISSAN						
100 NX	2.0	110	SR20DE	10/90 → 10/94		04
	2.0 GTI	105	SR20DE	03/91 → 10/94		04
NX/NXR	2.0	110	SR20DE	10/90 → 10/94		04
	2.0 GTI	105	SR20DE	03/91 → 10/94		04
PRIMERA	2.0 16V	85	SR20DI	06/90 → 01/96		04
	2.0 16V 4x4	85	SR20DI	04/91 → 06/96		04
	2.0 i	85	SR20DI	07/90 → 03/98		04
TOYOTA						
4 RUNNER	2.7	112	3RZ-FE	11/95 → 07/02		04
	2.7 4WD	112	3RZ-FE	11/95 → 08/02		04
	3.0 (VZN130_, VZN131_)	105	3VZ-E	07/90 → 11/95		06
DYNA 300	2.4	103	2RZ-FE	06/98 → 07/01		04
HILUX SURF	3.0 (VZN130_, VZN131_)	105	3VZ-E	07/90 → 11/95		06
HILUX VI	2.4	107	2RZ-FE	08/97 → 07/05		04
	2.4 i 4WD (RZN14_, RZN16_, RZN19_)	103	2RZ-FE	08/97 → 07/05		04
PICKUP	3.0 (VZN130_, VZN131_)	105	3VZ-E	07/90 → 11/95		06
PREVIA	2.4	97	2TZ-FE	05/90 → 08/00		04
	2.4 4WD	97	2TZ-FE	05/90 → 08/00		04
		110	2TZ-FZE	05/90 → 12/99		04
		118	2TZ-FZE	09/93 → 12/97		04
	2.4 LE/DLX 16V	97	2TZ-FE	05/90 → 08/00		04
YARIS	1.0 (SCP10_)	50	1SZ-FE	04/99 → 09/05	→ 12/02	04
	1.0 (SCP11_)	50	1SZ-FE	04/99 → 08/05		04

CT5KMR11

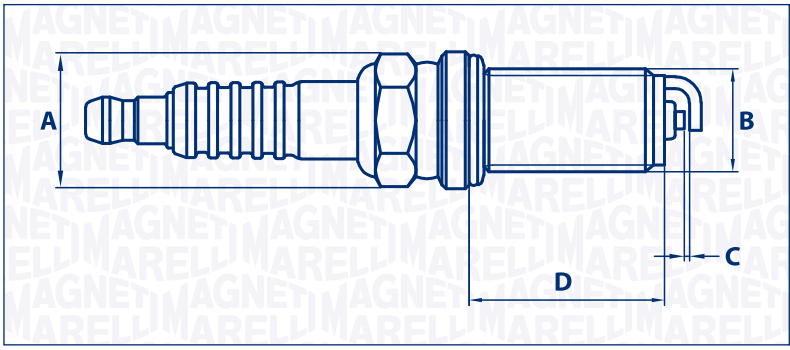

A	Hexagon Size	16
B	Thread Size	M14×1.25
C	Gap (mm)	1.1
D	Thread Reach	19.0
	Heat Range	5
	Type	Resistor
	Version	1 Mass Electrode
	Seat	Flat
	Core	Copper

BERU

0002330204 14FR8KUOU Z249

BOSCH

0 242 229 635 FR 8 KCU

CHAMPION

RC10MC4 RC12YC5

DENSO

K16R-U11

NGK

2355 2526 5776 BKR5EY11
BKR5EYA11 VL39 V-Line 39

		kW				QTY
CHRYSLER						
CARAVAN III	2.4 AWD	111	EDZ	02/97 → 03/01		04
	2.4 i	111	B00	01/95 → 03/01		04
CIRRUS	2.4 LX	103	EDZ	05/94 → 09/00		04
GRAND VOYAGER III	2.4 AWD	111	EDZ	02/97 → 03/01		04
	2.4 i	111	B00	01/95 → 03/01		04
STRATUS	2.4 16 V	103	EDZ	12/95 → 04/01		04
		112	EDZ	12/95 → 04/01		04
VOYAGER II	2.4 AWD	111	EDZ	02/97 → 03/01		04
	2.4 i	111	B00	01/95 → 03/01		04
VOYAGER III	2.4 AWD	111	EDZ	02/97 → 03/01		04
	2.4 i	111	B00	01/95 → 03/01		04
DODGE						
CARAVAN	2.4 i	111	EDZ	01/95 → 03/01		04
STRATUS	2.4 16 V	103	EDZ	12/95 → 04/01		04
		112	EDZ	12/95 → 04/01		04
NISSAN						
PRIMERA	2.0 16V	85	SR20De	09/96 → 12/01		04
TOYOTA						
ALLION I	1.5	80	1NZ-FE	06/01 → 04/05		04
	1.8	97	1ZZ-FE	06/01 → 04/05		04

MAGNETI MARELLI

CT5KMR11

		kW				QTY
TOYOTA						
ALTIS	1.3 (NZE120_)	64	2NZ-FE	11/01 → 05/04		04
	1.3 VVT-i	63	2NZ-FE	03/08 →		04
	1.4 VVT-i	71	4ZZ-FE	01/07 →		04
	1.4 VVT-i (ZZE120_)	71	4ZZ-FE	08/02 → 07/07		04
	1.5	81	1NZ-FE	06/07 → 07/07		04
	1.5 (ZZA120_, ZZE123_)	80	1NZ-FE	11/01 → 07/07		04
	1.5 G 4WD	80	1NZ-FE	11/01 → 05/04		04
	1.6 VVT-i (ZZE121_)	81	3ZZ-FE	08/02 → 07/07		04
	1.6 XLI S/D (ZZE121_)	81	3ZZ-FE	08/02 → 07/07		04
	1.8	92	1ZZ-FE	05/02 → 05/04		04
		96	1ZZ-FE	03/01 → 07/05		04
		100	1ZZ-FE	11/01 → 07/07		04
	1.8 SE-G	100	1ZZ-FE	11/01 → 07/07		04
AURIS	1.4 (ZZE150_)	71	4ZZ-FE	03/07 →		04
AVENSIS	1.6 (ZZT220_)	81	3ZZ-FE	10/00 → 02/03		04
	1.6 (ZZT250_)	81	3ZZ-FE	10/00 → 02/03		04
	1.6 VVT-i (ZZT220_)	81	3ZZ-FE	10/00 → 02/03		04
	1.6 VVT-i (ZZT250_)	81	3ZZ-FE	04/03 → 11/08		04
	1.8 (ZZT221_)	95	1ZZ-FE	10/00 → 02/03		04
	1.8 (ZZT251_)	95	1ZZ-FE	04/03 → 11/08		04
	1.8 VVT-i (ZZT221_)	95	1ZZ-FE	10/00 → 02/03		04
BLADE	1.4 (ZZE150_)	71	4ZZ-FE	03/07 →		04
CARINA E	1.5 SG	77	5A-FE	04/92 → 09/97		04
	1.6 GLI (AT190_)	79	4A-FE	01/93 → 09/97		04
CELICA	1.8 16V VT-i (ZZT230_)	105	1ZZ-FE	08/99 → 07/05		04
COROLLA	1.3 (NZE120_)	64	2NZ-FE	11/01 → 05/04		04
	1.3 VVT-i	63	2NZ-FE	03/08 →		04
	1.4 (ZZE111_)	71	4ZZ-FE	02/00 → 01/02		04
	1.4 (ZZE150_)	71	4ZZ-FE	03/07 →		04
	1.4 16V (ZZE111_)	71	4ZZ-FE	02/00 → 11/01		04
	1.4 VVT-i	71	4ZZ-FE	01/07 →		04
	1.4 VVT-i (ZZE120_)	71	4ZZ-FE	01/02 → 12/06		04
	1.5	81	1NZ-FE	06/07 → 07/07		04
		78	1NZ-FE	09/99 → 10/01		04
	1.5 (ZZA120_, ZZE123_)	80	1NZ-FE	11/01 → 07/07		04
	1.5 G 4WD	80	1NZ-FE	11/01 → 05/04		04
	1.6	76	4A-FE	07/92 → 07/95		04
		85	4A-FE	05/92 → 07/95		04
	1.6 (AE101_)	78	4A-F	09/94 → 12/97		04
		78	4A-FE	09/94 → 12/97		04
	1.6 (ZZE112_)	81	3ZZ-FE	02/00 → 01/02		04
	1.6 16V (ZZE112_)	81	3ZZ-FE	02/00 → 11/01		04
	1.6 DX (AE101_)	84	4A-FE	09/95 → 04/97		04
	1.6 GLI (AE101_)	84	4A-FE	07/94 → 04/97		04
	1.6 i (AE101)	78	4A-FE	09/94 → 11/99		04

CT5KMR11

		kW				QTY
TOYOTA						
COROLLA	1.6 Si (AE101_)	84	4A-FE	09/95 → 04/97		04
	1.6 VVT-i (ZZE121_)	81	3ZZ-FE	01/02 → 12/06		04
	1.6 XLI S/D (ZZE121_)	81	3ZZ-FE	08/02 → 07/07		04
	1.8	92	1ZZ-FE	05/02 → 05/04		04
		96	1ZZ-FE	03/01 → 07/05		04
		100	1ZZ-FE	06/04 → 02/07		04
	1.8 4WD	100	1ZZ-FE	12/01 → 02/07		04
	1.8 Fielder XEI	100	1ZZ-FE	06/04 → 02/07		04
	1.8 SE-G	100	1ZZ-FE	11/01 → 07/07		04
	1.8 VVTi	100	1ZZ-FE	06/04 → 02/07		04
COROLLA ALTIS	1.3 (NZE120_)	64	2NZ-FE	11/01 → 05/04		04
	1.3 VVT-i	63	2NZ-FE	03/08 →		04
	1.4 VVT-i	71	4ZZ-FE	01/07 →		04
	1.4 VVT-i (ZZE120_)	71	4ZZ-FE	08/02 → 07/07		04
	1.5	81	1NZ-FE	06/07 → 07/07		04
	1.5 (ZZA120_, ZZE123_)	80	1NZ-FE	11/01 → 07/07		04
	1.5 G 4WD	80	1NZ-FE	11/01 → 05/04		04
	1.6 VVT-i (ZZE121_)	81	3ZZ-FE	08/02 → 07/07		04
	1.6 XLI S/D (ZZE121_)	81	3ZZ-FE	08/02 → 07/07		04
	1.8	96	1ZZ-FE	03/01 → 07/05		04
		100	1ZZ-FE	11/01 → 07/07		04
		92	1ZZ-FE	05/02 → 05/04		04
	1.8 SE-G	100	1ZZ-FE	11/01 → 07/07		04
COROLLA Verso	1.6 (ZNR10_)	81	3ZZ-FE	04/04 → 03/09		04
	1.8 (ZNR11_)	95	1ZZ-FE	09/05 → 03/09		04
	1.8 VVT-i (ZZE122_)	99	1ZZ-FE	01/02 → 05/04		04
	1.8 VVTi 4WD	99	1ZZ-FE	10/01 →		04
CRESTA	2.0 VVTi 24V	118	1G-FE	10/96 → 09/01		06
LAND CRUISER	2.7 (RZJ12)	112	3RZ-FE	09/02 → 08/04		04
LITEACE	1.8	96	1ZZ-FE	10/97 →		04
MR 2 III	1.8 16V VT-i (ZZW30)	103	1ZZ-FE	10/99 → 06/07		04
MR III	1.8 16V VT-i (ZZW30)	103	1ZZ-FE	10/99 → 06/07		04
RAV 4 II	1.8 VVTi (ZCA25_, ZCA26_)	92	1ZZ-FE	08/00 → 11/05		04
RAV 4 Mk II	1.8 VVTi (ZCA25_, ZCA26_)	92	1ZZ-FE	08/00 → 11/05		04
URBAN CRUISER	1.5 VVTi (NCP110_)	80	1NZ-FE	07/07 →		04
	1.5 VVTi 4WD (NCP115_)	76	1NZ-FE	04/09 →		04

MAGNETI MARELLI

CT5KMR11

		kW				QTY
TOYOTA						
YARIS	1.3 (NCP10_, SCP12_)	63	2NZ-FE	11/99 → 09/05		04
		63	2SZ-FE	11/99 → 09/05		04
	1.3 (NCP130_)	63	2NZ-FE	12/10 →		04
	1.3 (NCP16_)	63	2NZ-FE	08/99 → 08/05		04
	1.3 (NCP92_)	64	2SZ-FE	08/07 →		04
		64	2NZ-FE	08/07 →		04
	1.3 (SCP12_)	64	2SZ-FE	04/02 → 09/05		04
	1.3 4WD (NCP16_)	63	2NZ-FE	08/99 →		04
	1.3 4WD (NCP92_)	64	2SZ-FE	08/07 →		04
		64	2NZ-FE	08/07 →		04
	1.3 VVT-i (NCP90_, SCP90_)	63	2SZ-FE	11/05 →		04
		63	2NZ-FE	11/05 →		04
		64	2SZ-FE	08/05 →		04
		64	2NZ-FE	08/05 →		04
	1.5 (NCP12_)	78	1NZ-FE	04/99 → 08/05		04
	1.5 (NCP13_)	77	1NZ-FE	01/03 → 09/05		04
		110	1NZ-FE	03/03 → 07/05		04
		78	1NZ-FE	04/01 → 09/05		04
	1.5 (NCP91_)	80	1NZ-FE	11/05 →		04
	1.5 (NCP93)	80	1NZ-FE	08/07 →		04
	1.5 (NCP93_)	81	1NZ-FE	08/07 →		04
	1.5 4WD (NCP13_)	78	1NZ-FE	09/02 → 08/05		04
	1.8 VVTi	97	1ZZ-FE	11/05 → 12/10		04
YARIS VERSO	1.3 (NCP20_, NCP22_)	62	2NZ-FE	11/02 → 09/05		04
		63	2NZ-FE	08/99 → 10/02		04
	1.5 (NCP21_)	78	1NZ-FE	03/00 → 09/05		04
		77	1NZ-FE	05/03 → 09/05		04
	1.5 4WD (NCP21_)	78	1NZ-FE	03/00 → 09/05		04

CT5LDMR9

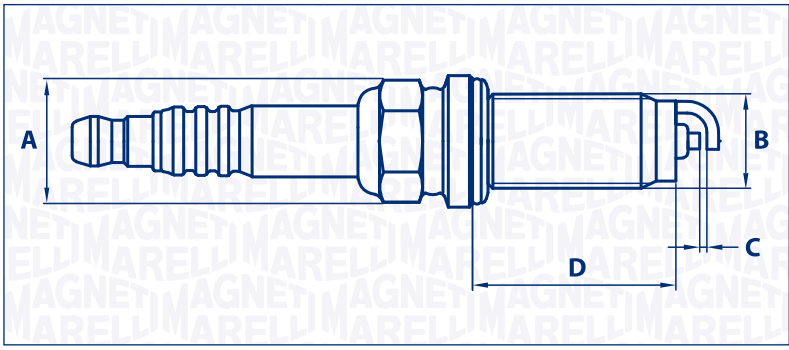

A	Hexagon Size	14
B	Thread Size	M12×1.25
C	Gap (mm)	0.9
D	Thread Reach	20.5
	Heat Range	5
	Type	Resistor
	Version	1 Mass Electrode
	Seat	Flat
	Core	Copper

BERU

0002230300 12 VR-8 SE Z243

BOSCH

40 0 242 129 506 0 242 129 508 0 242 129 510
0 242 140 530 VR 6 NE VR 8 SC VR 8 SE 0
VR 8 SEW

CHAMPION

OE130/R04 OE130/T10 REA8MCL REA8MX

DENSO

XE20HR-U9

NGK

5942 6799 93030 LZKAR7A
LZKAR7B

		kW				QTY
CITROËN						
C2	1.4 16V	65	KFU (ET3J4)	06/06 →	→ 01/10	04
C3 I	1.4 16V	65	KFU (ET3J4)	12/03 →	→ 10/09	04
C4 Coupé	1.4 16V	65	KFU (ET3J4)	11/04 → 07/11	→ 06/10	04
C4 I	1.4 16V	65	KFU (ET3J4)	11/04 → 07/11	→ 01/11	04
DACIA						
LOGAN	1.2 16V	55	D4F 732	02/06 →		04
	1.2 16V LPG	55	D4F 734	02/06 →		04
LOGAN II	1.2	55	D4F 732	10/12 →		04
	1.2 LPG	55	D4F 734	10/12 →		04
LOGAN MCV II	1.2	54	D4F 732	05/15 →		04
		55	D4F 732	02/13 →		04
	1.2 LPG	55	D4F 734	02/13 →		04
SANDERO	1.2 16V	55	D4F 732	11/08 →		04
	1.2 16V LPG	55	D4F 732	11/08 →		04
SANDERO II	1.2	54	D4F 732	05/15 →		04
		55	D4F 732	10/12 →		04
	1.2 LPG	55	D4F 732	10/12 →		04
NISSAN						
KUBISTAR	1.2	44	D7F 764	08/03 → 10/09		04
	1.2 16V	55	D4F 712	04/06 → 10/09		04
PEUGEOT						
206	1.4 16V	65	KFU (ET3J4)	10/03 →	→ 02/07	04
207	1.4 16V	65	KFU (ET3J4)	02/06 →		04
307	1.4 16V	65	KFU (ET3J4)	11/03 →	→ 01/08	04
307 Break	1.4 16V	65	KFU (ET3J4)	11/03 →	→ 11/07	04

MAGNETI MARELLI

CT5LDMR9

		kW				QTY
PEUGEOT						
1007	1.4 16V	65	KFU (ET3J4)	10/05 →	→ 07/07	04
RENAULT						
CLIO I	1.2	43	D7F 744	02/98 → 10/03		04
		43	D7F 746	02/98 → 10/03		04
	1.2 16V	55	D4F 706	04/02 →		04
		55	D4F 712	04/02 →		04
CLIO II	1.2 16V (BB05, BB0W, BB11, BB27, BB2T, BB2U, BB2V, CB05...)	55	D4F 712	06/01 →		04
		55	D4F 706	06/01 →		04
		55	D4F 728	06/01 →		04
		55	D4F 722	06/01 →		04
		55	D4F 714	06/01 →		04
CLIO III	1.2 (BR01, BR03, BR0E, CR0E)	57	D4F 764	10/05 →		04
	1.2 16V	43	D4F 764	06/06 → 08/10		04
		58	D4F 764	06/05 →	→ 04/09	04
	1.2 16V Hi-Flex (BR1U, CR1U)	55	D4F 742	07/08 →		04
		55	D4F 740	07/08 →		04
	1.2 16V (BR02, BR0J, BR11, CR02, CR0J, CR11)	55	D4F 706	06/05 →		04
		55	D4F 740	06/05 →		04
		55	D4F 764	06/05 →		04
	1.2 16V (BR0R, BR1D, BR1L, CR0R)	48	D4F 740	06/05 →	→ 04/09	04
CLIO IV	1.2 16V	54	D4F 728	11/12 →		04
		54	D4F 740	11/12 →		04
CLIO Grandtour	1.2 16V Hi-Flex (KR0S)	55	D4F 740	07/08 →	→ 04/09	04
	1.2 16V (KR02, KR0J)	55	D4F 740	02/08 →		04
	1.2 16V (KR0E)	58	D4F 764	02/08 →	→ 04/09	04
CLIO Sportour	1.2 16V Hi-Flex (KR0S)	55	D4F 740	07/08 →	→ 04/09	04
	1.2 16V (KR02, KR0J)	55	D4F 740	02/08 →		04
	1.2 16V (KR0E)	58	D4F 764	02/08 →	→ 04/09	04
KANGOO	1.2 16V (FC05)	55	D4F 712	10/01 →		04
		55	D4F 730	10/01 →		04
		55	D4F 714	10/01 →		04
	1.2 16V (KC05, KC06, KC03, KC0T, KC0W, KC1D)	55	D4F 712	06/01 →		04
		55	D4F 716	06/01 →		04
		55	D4F 730	06/01 →		04
		55	D4F 714	06/01 →		04
	1.2 BiFuel	43	D7F 710	07/98 → 07/01		04
		43	D7F 744	07/98 → 07/01		04

CT5LDMR9

		kW				QTY
RENAULT						
MODUS / GRAND MODUS	1.2 (FP0C, FP0K, FP0P)	48	D4F 740	05/05 →	→ 12/07	04
	1.2 (JP0C, JP0K, FP0C, FP0K, FP0P, JP0P, JP0T)	55	D4F 740	12/04 →		04
	1.2 (JP0S)	58	D4F 764	12/04 →		04
	1.2 16V Hi-Flex	55	D4F 740	10/08 →		04
SYMBOL I	1.2	43	D7F 744	02/98 → 10/03		04
		43	D7F 746	02/98 → 10/03		04
	1.2 16V	55	D4F 712	04/02 →		04
		55	D4F 706	04/02 →		04
SYMBOL II	1.2 16V (LU2V)	55	D4F 728	09/08 →		04
THALIA I	1.2	43	D7F 744	02/98 → 10/03		04
		43	D7F 746	02/98 → 10/03		04
	1.2 16V	55	D4F 712	04/02 →		04
		55	D4F 706	04/02 →		04
THALIA II	1.2 16V (LU2V)	55	D4F 728	09/08 →		04
TWINGO I	1.2 16V (C060)	44	D4F 708	08/04 → 06/07		04
	1.2 16V (C06C, C06D, C06K)	55	D4F 702	01/01 →		04
TWINGO II	1.2 16V (CN04, CN0A, CN0B)	55	D4F 764	03/07 →		04
		55	D4F 772	03/07 →		04
		55	D4F 770	03/07 →		04
	1.2 16V (CN0K, CN0V)	56	D4F 772	03/07 →		04

MAGNETI MARELLI

CT5QHMR

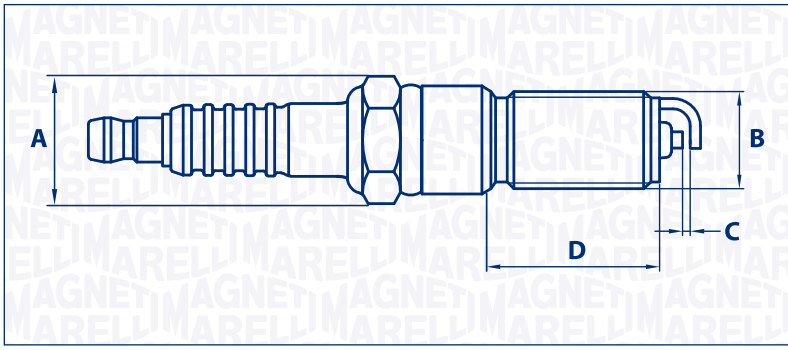

A	Hexagon Size	16
B	Thread Size	M14×1.25
C	Gap (mm)	1.0
D	Thread Reach	26.0
	Heat Range	5
	Type	Resistor
	Version	1 Mass Electrode
	Seat	Conical
	Core	Copper

BOSCH

39 0 242 229 650 0 242 229 785 HR 8 MCV
HR 8 MEV

CHAMPION

RE7YCC RES9YCC4

DENSO

T16VR-U10

NGK

0005 4559 6585 96463
TR5A-10 TR5A13 TR5B13 TR5B-13
VL45 V-Line 45

		kW				QTY
FORD						
B-MAX	1.4	66	SPJD	10/12 →		04
	1.6 Ti	77	IQJA	10/12 →		04
C-MAX	1.6	74	SHDB	02/07 → 09/10	→ 08/10	04
		74	SHDA	02/07 → 09/10	→ 08/10	04
		74	SHDC	02/07 → 09/10	→ 08/10	04
		74	HWDB	02/07 → 09/10	→ 08/10	04
		74	HWDA	02/07 → 09/10	→ 08/10	04
		85	HXDA	04/07 → 09/10		04
		85	SIDA	04/07 → 09/10		04
		85	HXDB	04/07 → 09/10		04
C-MAX II	1.6 Ti	63	XTDA	12/10 →		04
		77	IQDA	12/10 →		04
		77	IQDB	12/10 →		04
COUGAR	2.0 16V	96	EDBD	08/98 → 12/01		04
		96	EDBC	08/98 → 12/01		04
		96	EDBB	08/98 → 12/01		04
		96	EDBA	08/98 → 12/01		04
FIESTA V	1.25 16V	51	M7JB	03/03 → 06/08	→ 08/05	04
		51	M7JA	03/03 → 06/08	→ 08/05	04
		55	FUJB	05/02 → 06/08		04
		55	FUJA	05/02 → 06/08		04
	1.3	44	BAJA	11/01 → 06/08		04
		51	A9JB	11/01 → 06/08		04
		51	A9JA	11/01 → 06/08		04
	1.4 16V	59	FXJA	11/01 → 06/08		04
		59	FXJB	11/01 → 06/08		04
	1.6 16V	74	FYJB	11/01 → 06/08		04
		74	FYJA	11/01 → 06/08		04

CT5QHMR

		kW				QTY
FORD						
FIESTA VI	1.25	44	STJB	10/12 →		04
		44	STJB	06/08 →		04
		44	STJA	06/08 →		04
		60	SNJA	06/08 →		04
		60	SNJB	06/08 →		04
		60	SNJC	06/08 →		04
		60	SNJD	06/08 →		04
	1.6 Ti	77	IQJA	09/12 →		04
FOCUS	1.4 16V	55	FXDA	10/98 → 04/11		04
		55	FXDB	10/98 → 04/11		04
		55	FXDC	10/98 → 04/11		04
		55	FXDD	10/98 → 04/11		04
	1.6 16V	74	FYDB	10/98 → 04/11		04
		74	FYDC	10/98 → 04/11		04
		74	FYDA	10/98 → 04/11		04
		74	FYDH	10/98 → 04/11		04
		74	FYDD	10/98 → 04/11		04
	1.6 16V Flexifuel	75	FYDH	01/02 → 11/04		04
	1.6 GL 16V Flexifuel	75	FYDH	01/02 → 11/04		04
	1.8 16V	85	EYDJ	10/98 → 04/11	11/01 →	04
		85	EYDB	10/98 → 04/11	11/01 →	04
		85	EYDC	10/98 → 04/11	11/01 →	04
		85	EYDD	10/98 → 04/11	11/01 →	04
		85	EYDE	10/98 → 04/11	11/01 →	04
		85	EYDL	10/98 → 04/11	11/01 →	04
		85	EYDF	10/98 → 04/11	11/01 →	04
		85	EYDG	10/98 → 04/11	11/01 →	04
		85	EYDI	10/98 → 04/11	11/01 →	04
	1.8 GL 16V	85	EYDJ	10/98 → 04/11	11/01 →	04
		85	EYDB	10/98 → 04/11	11/01 →	04
		85	EYDL	10/98 → 04/11	11/01 →	04
		85	EYDC	10/98 → 04/11	11/01 →	04
		85	EYDD	10/98 → 04/11	11/01 →	04
		85	EYDE	10/98 → 04/11	11/01 →	04
		85	EYDI	10/98 → 04/11	11/01 →	04
		85	EYDF	10/98 → 04/11	11/01 →	04
		85	EYDG	10/98 → 04/11	11/01 →	04
	2.0 16V	96	EDDD	10/98 → 04/11		04
		96	EDDF	10/98 → 04/11		04
		96	EDDC	10/98 → 04/11		04
		96	EDDB	10/98 → 04/11		04
FOCUS C-MAX	1.6	74	HWDB	10/03 → 03/07		04
		74	HWDA	10/03 → 03/07		04
	1.6 Ti	85	SIDA	08/04 → 03/07		04
		85	HXDA	08/04 → 03/07		04

MAGNETI MARELLI

CT5QHMR

		kW				QTY
FORD						
FOCUS II	1.4	59	ASDA	11/04 → 09/12	→ 04/10	04
		59	ASDB	11/04 → 09/12	→ 04/10	04
	1.6	74	HWDA	11/04 → 09/12	→ 09/11	04
		74	SHDC	11/04 → 09/12	→ 09/11	04
		74	SHDB	11/04 → 09/12	→ 09/11	04
		74	SHDA	11/04 → 09/12	→ 09/11	04
		74	HWDB	11/04 → 09/12	→ 09/11	04
	1.6 Ti	85	HXDB	11/04 → 09/12	→ 04/10	04
		85	SIDA	11/04 → 09/12	→ 04/10	04
		85	HXDA	11/04 → 09/12	→ 04/10	04
FOCUS III	1.6 Ti	63	XTDA	08/11 →		04
		77	IQDB	04/11 →		04
FUSION	1.25	55	FUJB	08/04 → 12/12		04
		55	FUJA	08/04 → 12/12		04
	1.4	59	FXJA	08/02 → 12/12		04
		59	FXJC	08/02 → 12/12		04
		59	FXJB	08/02 → 12/12		04
	1.6	74	FYJC	08/02 → 11/08		04
		74	FYJB	08/02 → 11/08		04
		74	FYJA	08/02 → 11/08		04
GRAND C-MAX	1.6 Ti	77	IQDA	12/10 →		04
		77	IQDB	12/10 →		04
IKON V	1.25 16V	51	M7JB	03/03 → 06/08	→ 08/05	04
		51	M7JA	03/03 → 06/08	→ 08/05	04
		55	FUJB	05/02 → 06/08		04
		55	FUJA	05/02 → 06/08		04
	1.3	44	BAJA	11/01 → 06/08		04
		51	A9JB	11/01 → 06/08		04
		51	A9JA	11/01 → 06/08		04
	1.4 16V	59	FXJA	11/01 → 06/08		04
		59	FXJB	11/01 → 06/08		04
	1.6 16V	74	FYJA	11/01 → 06/08		04
		74	FYJB	11/01 → 06/08		04
KA	1.3 i	44	J4M	09/96 → 11/08		04
		44	J4K	09/96 → 11/08		04
		44	J4D	09/96 → 11/08		04
		44	J4N	09/96 → 11/08		04
		44	J4P	09/96 → 11/08		04
		44	BAA	09/96 → 11/08		04
		44	J4S	09/96 → 11/08		04
		51	A9B	08/02 → 11/08		04
		51	A9A	08/02 → 11/08		04

CT5QHMR

		kW				QTY
FORD						
KA	1.3 i CLX	44	BAA	09/96 → 11/08		04
		44	J4N	09/96 → 11/08		04
		44	J4M	09/96 → 11/08		04
		44	J4K	09/96 → 11/08		04
		44	J4P	09/96 → 11/08		04
		44	J4S	09/96 → 11/08		04
		44	J4D	09/96 → 11/08		04
KA Van	1.3 i	44	J4D	05/02 → 05/05		04
		44	J4S	05/02 → 05/05		04
		44	J4N	05/02 → 05/05		04
		44	J4K	05/02 → 05/05		04
		44	BAA	05/02 → 05/05		04
		44	J4P	05/02 → 05/05		04
		44	J4M	05/02 → 05/05		04
P 100 II	2.0	57	NAE	10/87 → 12/92		04
PUMA	1.4 16V	66	FHF	11/97 → 10/00		04
		66	FHD	11/97 → 10/00		04
	1.6 16V	76	L1W	08/00 → 06/02	→ 12/01	04
TOURNEO CONNECT	1.8 16V	85	EYPC	06/02 → 12/13	→ 06/06	04
		85	EYPA	06/02 → 12/13	→ 06/06	04
		85	EYPD	06/02 → 12/13	→ 06/06	04
TRANSIT CONNECT	1.8 16V	85	EYPA	06/02 → 12/13	→ 06/06	04
		85	EYPD	06/02 → 12/13	→ 06/06	04
		85	EYPC	06/02 → 12/13	→ 06/06	04
MAZDA						
2	1.4	59	FXJA	04/03 →		04
		59	FXJA	02/03 →		04
3	1.4	59	FXJA	02/04 → 06/09		04
6	2.0 MZR	108	LF17	08/07 →	→ 10/09	04
		114	LF-DE	01/10 →	02/12 →	04
	2.3	120	L3C1	03/05 → 07/07		04
		122	L3C1	06/02 → 08/07	→ 04/04	04
	2.5 MZR	125	L5-VE	08/07 →		04
ATENZA	2.3	120	L3C1	03/05 → 07/07		04
		122	L3C1	06/02 → 08/07	→ 04/04	04
AXELA	1.4	59	FXJA	02/04 → 06/09		04
DEMIO	1.4	59	FXJA	04/03 →		04
		59	FXJA	02/03 →		04

MAGNETI MARELLI

CT6FM

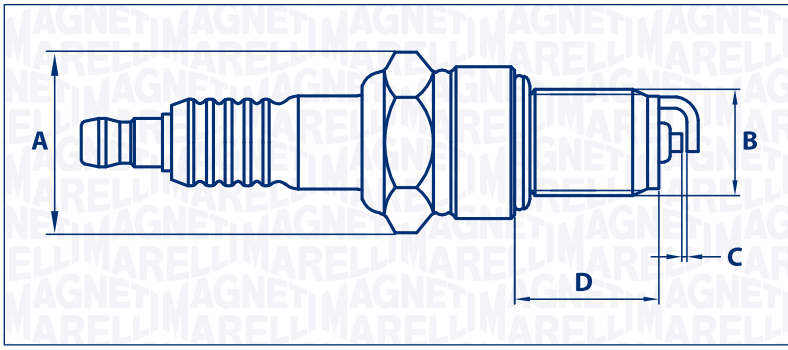

A	Hexagon Size	20.5
B	Thread Size	M14×1.25
C	Gap (mm)	0.8
D	Thread Reach	19.0
	Heat Range	6
	Type	Resistor
	Version	1 Mass Electrode
	Seat	Flat
	Core	Copper

BERU

0001335714 0001335737 14-6 D 14-7 D
14-7 DU0 Z61 Z62

BOSCH

0 241 240 611 W 6 DC

CHAMPION

N281YC N66Y N8Y N9Y
N9YCC N9YCX OE001/R04 OE001/T10
OE022/T10

DENSO

W20EP-U

NGK

5039 5637 7529 7639
BP6E BP6ESZ VL4 V-line 4

		kW				QTY
ALPINA						
B10 (E34)	3.4	187	M30 B34 (34C20)	04/88 → 12/92		06
CITROËN						
C25	2.0	62	170C (XN1T)	02/91 → 02/94		04
FIAT						
TALENTO (290_)	2.0 (290U4)	55	170 B	03/89 → 03/94		04
	2.0 (290UA4)	55	170 B	03/89 → 03/94		04
	2.0 (290UEH4)	55	170 B	03/89 → 03/94		04
TIPO (160_)	1.8 i.e.	81	159 A4.000	10/90 → 06/93		04
	1.8 i.e. (160.EQ, 160. AM)	74	836 A5.000	10/94 → 10/95		04
MERCEDES-BENZ						
G CLASS (W463)	G 500 E (463.228)	177	M 117.965	09/93 →		08
S CLASS (W126)	280 SE, SEL (126.022, 126.023)	136	M 110.989	10/97 → 07/85		06
		136	M 110.987	10/97 → 07/85		06
	500 SE, SEL	185	M 117.965	09/87 → 06/91		08
		195	M 117.965	09/87 → 06/91		08
	500 SE, SEL Cat	185	M 117.965	06/89 → 06/91		08
	560 SE, SEL	205	M 117.968	08/87 → 06/91		08
S CLASS Coupé (C126)	500 SEC (126.044)	177	M 117.963	04/99 → 09/04		08
		185	M 117.965	08/87 → 06/91		08
	500 SEC Cat	185	M 117.965	06/89 → 06/91		08
PEUGEOT						
504	1.8	53	XM7	07/87 → 12/89		04
J5	2.0	62	XN1TA	09/90 → 01/94		04

CT6FM

		kW				QTY
RENAULT						
19 II	1.8	67	F3P 765	05/92 → 09/94		04
	1.8 (453A/F)	66	F3P 760	04/92 → 12/95	→ 09/94	04
		66	F3P 706	04/92 → 12/95	→ 09/94	04
CLIO I	1.8 (B/C578)	66	F3P 755	08/94 → 09/98		04
		66	F3P 754	08/94 → 09/98		04
LAGUNA I	1.8 (K56Z)	69	F3P 720	09/95 → 03/01		04
		69	F3P 724	09/95 → 03/01		04
MEGANE I	2.0 i	80	F3R 751	03/99 → 08/03		04
		80	F3R 750	03/99 → 08/03		04
	2.0 i (BA0G)	84	F3R 750	01/96 → 08/03		04
		84	F3R 751	01/96 → 08/03		04
	2.0 i (DA0G)	84	F3R 798	03/96 → 08/03		04
		84	F3R 750	03/96 → 08/03		04
		84	F3R 751	03/96 → 08/03		04
	2.0 i (LA07, LA0G)	84	F3R 798	09/96 → 08/03		04
		84	F3R 797	09/96 → 08/03		04
		84	F3R 791	09/96 → 08/03		04
		84	F3R 752	09/96 → 08/03		04
		84	F3R 796	09/96 → 08/03		04
		84	F3R 750	09/96 → 08/03		04
		84	F3R 751	09/96 → 08/03		04
MEGANE Scenic	2.0 i (JA0G)	80	F3R 796	01/99 → 09/99		04
		84	F3R 750	01/97 → 09/99		04
		84	F3R 751	01/97 → 09/99		04
ROVER						
MAESTRO	1.3	49	12 HE	09/90 → 01/95		04
		51	12 HE	09/90 → 01/95		04
MONTEGO	2.0 GTI/LXI	75	20 H	12/90 → 12/93		04
	2.0 i Cat	75	20 H	12/90 → 10/94	→ 01/92	04
VOLKSWAGEN						
GOLF II	1.8 Syncro	72	1P	08/88 → 07/91		04
JETTA II	1.3 Cat	40	2G	06/87 → 12/91		04
		40	NZ	06/87 → 12/91		04
		40	MH	06/87 → 12/91		04
LT 28-50	2.4 i	69	1E	08/89 → 06/96		06
	2.4 Syncro	66	DL	08/91 → 07/92		06
LT 40-55 I	2.4 i	69	1E	01/93 → 06/96		06
POLO (86C, 80)	1.0 Cat	33	ACM	08/89 → 09/94		04
		33	AAU	08/89 → 09/94		04
		33	AAK	08/89 → 09/94		04
	1.3 Cat	40	NZ	07/87 → 09/94		04
		40	MH	07/87 → 09/94		04
VOLVO						
740	2.0	86	B 200 E	01/87 → 08/88		04

CT6FMR

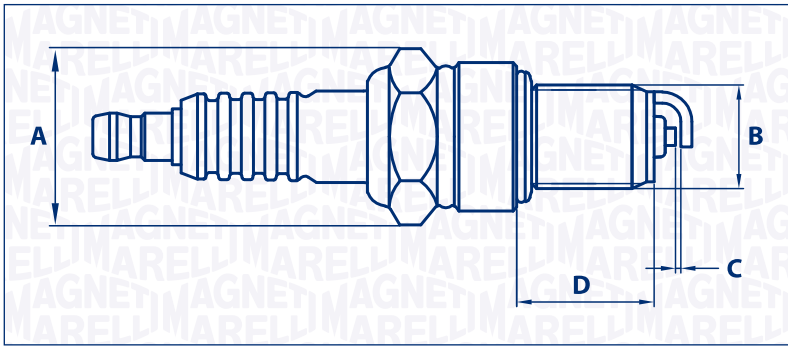

A	Hexagon Size	20.5
B	Thread Size	M14×1.25
C	Gap (mm)	0.8
D	Thread Reach	19.0
	Heat Range	6
	Type	Resistor
	Version	1 Mass Electrode
	Seat	Flat
	Core	Copper

BERU

0001335702	0001340702	0001340707	0002335701
0002340701	14 R-6 DU	14-6 D1	14-6 DU
14-6 DU0	147DU	14R6D	14R7D
14R7DU	Z11	Z20	Z22
Z27	Z50		

BOSCH

1	12	0 241 235 755	0 242 235 663
0 242 240 592	W 7 DC	WR 6 D	WR 7 D

CHAMPION

3415	1L4J	1L4JR	4VLSR
9FYS	9FYSR	9FYSSR	EON5/286
EON5/287	OE004/R04	OE004/T10	OE006/R04
OE006/T10	OE111/T10	RN10Y	RN10YC
RN281YC	RN8YC	RN9Y	RN9YC
RN9YCC	RN9YCE	RN9YCX	V4LSR

DENSO

W20EPR-U

NGK

2268	2948	4008	6464
7811	7822	91406	94811
BP6ES	BP6ESA	BP6EZ	BPR6E
BPR6E11	BPR6ES	BPR6EZ	VL2
V-line 2			

		kW				QTY
AUSTIN						
MINI	1000 Mayfair Sport	30	99 HD81	09/88 → 06/93		04
AUTOBIANCHI						
Y10	1.3 i.e. GT	54	146A5.046	06/89 → 10/95	→ 09/92	04
BEDFORD						
MIDI	2.0	62	4ZC1	06/88 → 08/92		04
BENTLEY						
CONTINENTAL	6.75 V8 R	265	L 410 IT	10/91 → 08/99		08
TURBO R	6.7 S	298	L 410 IT	01/94 → 12/95		08
BMW						
5 (E34)	525 i	125	M20 B25 (256K1)	01/88 → 08/91		06
CHEVROLET						
AVEO 2	1.5	62	F15S3	05/05 →		04
		62	LX6	05/05 →		04
KALOS	1.4	61	F14S3	03/05 →		04
LANOS	1.4	55	A 13 SM	11/05 →		04
	1.5	63	A15SMS	11/05 →		04
LOVA	1.5	62	F15S3	05/05 →		04
		62	LX6	05/05 →		04

CT6FMR

		kW				QTY
DAEWOO						
CIELO	1.5	44	G15MF	08/96 → 08/97		04
		52	G15MF	02/95 → 08/97		04
		55	G15MF	02/95 → 08/97		04
ESPERO	1.8	66	C18LE	02/95 → 09/99		04
		70	C18LE	02/95 → 06/99		04
	2.0	74	C20LZ	10/91 → 09/93		04
		77	C20LE	02/95 → 06/99		04
		81	C20LE	10/93 → 09/94		04
	2.0 DLX	77	C20LE	02/95 → 06/99		04
GENTRA	1.5 SE	62	A15SMS	11/02 → 04/05		04
KALOS	1.4	61	F14S3	09/02 →		04
LACETTI	1.5 SX	63	A15SMS	04/97 → 05/99		04
LANOS	1.3	55	A13SMS	05/97 →	→ 07/05	04
		55	A14SMS	05/97 →	→ 07/05	04
	1.3 Lanos / Sens	55	A13SMS	05/97 →	→ 07/05	04
		55	A14SMS	05/97 →	→ 07/05	04
	1.5	63	A15SMS	05/97 →	→ 07/05	04
		73	A15SMS	10/97 → 06/99		04
NEXIA	1.5	44	G15MF	08/96 → 08/97		04
		52	G15MF	02/95 → 08/97		04
		55	G15MF	02/95 → 08/97		04
		59	Y15L	07/08 →		04
REZZO	1.8	72	A18DMS	09/00 →	→ 07/05	04
TACUMA	1.8	72	A18DMS	09/00 →	→ 07/05	04
FIAT						
126 (126_)	700	19	126 A2.048	09/87 → 06/96	→ 12/93	02
CINQUECENTO (170_)	0.7 (170AA)	23	170 A.000	12/91 → 01/96		02
	0.7 i (170AD)	22	170 A.046	07/94 → 01/98		02
	0.9 (170AB)	30	170 A1.000	07/91 → 12/93		04
	0.9 i.e. (170AC)	30	170 A1.046	07/91 → 12/93		04
	0.9 i.e. S (170AF, 170CF)	29	1170 A1.000	07/91 → 07/99		04
		29	1170 A1.046	07/91 → 07/99		04
DUNA (146_)	60 1.1	43	146 A6.000	01/87 → 12/91		04
	70 1.3	49	146 A5.000	01/87 → 12/91		04
FIORINO (146_)	70 1.3	49	146 A5.000	01/88 → 12/94		04
	70 i.e. 1.4	49	146 C5.000	05/94 → 05/01		04
FIORINO (147_)	1.3	49	146 A5.000	12/87 → 08/93		04
FIORINO Pick up (146_)	1.3	49	146 A5.000	01/88 → 12/94		04
	1.4	49	146 D5.000	05/94 → 05/01		04
FIORINO Pick up (147_)	1.0	41	156 A.000	09/87 → 12/88		04
PANDA (141_)	900	29	1170 A1.046	04/92 → 12/96		04
REGATA (138_)	90 i.e. 1.6	66	149 C2.000	01/87 → 07/89		04
	100 i.e. 1.6	74	149 C3.000	01/87 → 12/90		04
SEICENTO / 600 (187_)	0.9 (187AXA, 187AXA1A)	29	1170 A1.046	01/98 → 01/10		04

MAGNETI MARELLI

CT6FMR

		kW				QTY
FIAT						
TEMPRA (159_)	1.4 i.e. (159.AC)	57	159 A2.000	03/91 → 08/96	→ 12/93	04
	1.4 i.e. (159.AC, 159. AX)	51	160 A1.046	03/92 → 08/96		04
		51	159 A2.000	03/92 → 08/96		04
		51	836 A4.000	03/92 → 08/96		04
	1.6 (159.AD)	63	159 A3.000	03/90 → 04/93	→ 12/91	04
	1.6 i.e. (159.AE)	57	159 A3.046	06/90 → 07/92		04
	1.8 i.e. (159.AZ)	66	835 C4.000	09/93 → 08/96		04
	1.8 i.e. (159.BY)	74	836 A5.000	10/94 → 08/96		04
TIPO (160_)	1.4 (160.AC)	52	160 A1.048	07/87 → 12/89		04
	1.4 i.e. (160.AP, 160.AD, 160.EA)	51	160 A1.046	05/89 → 04/95		04
	1.8 i.e.	66	835 C4.000	09/93 → 04/95		04
UNO (146_)	70 i.e.	53	146 C1.000	09/89 → 12/93		04
	70 i.e. 1.4	51	160 A1.046	09/89 → 12/93		04
		53	146 C1.000	09/89 → 12/93		04
	70 S 1.4	52	160 A1.048	09/89 → 10/92		04
HONDA						
BALLADE I	1300 S	52	EN4	10/97 → 12/84		04
HYUNDAI						
GRACE	2.4	82	G4CS	10/97 → 12/04	→ 03/00	04
		84	G4CS	01/97 → 03/00		04
		90	G4CS	07/93 → 03/00		04
H-1 / STAREX	2.4 4WD	82	G4CS	02/98 → 04/04	→ 07/01	04
H100 / GRACE	2.4	82	G4CS	10/97 → 12/04	→ 03/00	04
		84	G4CS	01/97 → 03/00		04
		90	G4CS	07/93 → 03/00		04
	2.4 TD	90	G4CS	07/93 → 07/97		04
H 150	2.4	82	G4CS	10/97 → 12/04	→ 03/00	04
		84	G4CS	01/97 → 03/00		04
		90	G4CS	07/93 → 03/00		04
H 200	2.4 4WD	82	G4CS	02/98 → 04/04	→ 07/01	04
LIBERO	2.4 4WD	82	G4CS	02/98 → 04/04	→ 07/01	04
PORTER	2.4	82	G4CS	03/96 → 04/04		04
SATELLITE	2.4 4WD	82	G4CS	02/98 → 04/04	→ 07/01	04
SONATA II	2.4 i	83	G4CS	09/88 → 08/91		04
INNOCENTI						
ELBA (146)	1.3 (146CW)	49	146 A5.000	08/91 → 12/96	→ 12/92	04
	1.4 i.e. (146EN, 146EQ)	49	146 C5.000	09/94 → 12/96		04
		49	146 D5.000	09/94 → 12/96		04
ISUZU						
MIDI	2.0	61	4ZC1	06/88 →		04
	2.0 (98000)	61	4ZC1	01/89 →	→ 10/91	04
	2.0 4WD	61	4ZC1	09/88 →		04
	2.0 4WD (94000)	61	4ZC1	01/89 →	→ 10/91	04

CT6FMR

		kW				QTY
ISUZU						
PICKUP	2.3	70	4ZD1	10/87 → 08/96		04
	2.6 LS	90	4ZE1	10/87 → 08/90		04
RODEO	2.3	70	4ZD1	10/87 → 08/96		04
	2.6 LS	90	4ZE1	10/87 → 08/90		04
LADA						
110	1.5	52	BA3 2111	02/92 → 08/94		04
		54	BA3 2111	01/95 →	→ 01/07	04
		56	VAZ-2111	10/00 →	→ 01/09	04
		57	VAZ-2111	01/95 →	→ 01/09	04
	1.6	60	VAZ-21114	01/00 →	→ 10/08	04
		72	VAZ-21114	01/95 → 12/07		04
111	1.5	56	VAZ-2111	10/00 →	→ 01/09	04
		57	VAZ-2111	01/96 →	→ 01/09	04
		58	VAZ-2111	10/00 →	→ 01/09	04
	1.6	60	VAZ-21114	01/05 →		04
112	1.5	54	VAZ-2111	01/95 →	→ 01/08	04
		56	VAZ-2111	10/00 →	→ 01/08	04
		57	VAZ-2111	01/95 →	→ 01/08	04
	1.6	60	VAZ-21114	01/05 →		04
CARLOTA	1100	39	BA3 21081	02/88 → 12/94		04
		43	BA3 21081	02/96 →		04
	1300	45	BA3 2108	09/91 →		04
		46	BA3 2108	01/88 →		04
		50	BA3 21115	02/96 →		04
	1500	50	BA3 21083	09/91 →	06/95 → 07/03	04
		52	BA3 2111	02/95 →	→ 07/03	04
		53	BA3 21083	01/88 →		04
	1.5	57	VAZ-2111	02/92 → 08/94		04
CEVARO	1100	39	BA3 21081	02/88 → 12/94		04
		43	BA3 21081	02/96 →		04
	1300	45	BA3 2108	09/91 →		04
		46	BA3 2108	01/88 →		04
		50	BA3 21115	02/96 →		04
	1500	50	BA3 21083	09/91 →	06/95 → 07/03	04
		52	BA3 2111	02/95 →	→ 07/03	04
		53	BA3 21083	01/88 →		04
	1.5	57	VAZ-2111	02/92 → 08/94		04

MAGNETI MARELLI

CT6FMR

		kW				QTY
LADA						
DIVA	1100	39	BA3 21081	07/91 →		04
	1300	45	BA3 2108	07/91 →		04
		46	BA3 2108	05/90 →		04
		48	BA3 2108	05/89 → 07/97		04
		50	BA3 21115	02/96 →		04
	1500	50	BA3 21083	07/91 →		04
		52	BA3 2111	11/94 →		04
		53	BA3 21083	09/91 →		04
	1.5	57	VAZ-2111	02/92 → 08/94		04
		59	VAZ-2111	08/03 → 12/07		04
KALINA	1.6	60	VAZ-21124	10/04 →		04
KALINKA	1500	49	BA3 2103	05/93 → 04/05		04
		49	BA3 2103	08/94 →	→ 01/96	04
	1700	62	B032123	08/94 →		04
	1.6 (WAS21074)	56	BA3 2106	01/88 → 10/01		04
	1500 S (WAS21093)	52	BA3 21083	06/89 →		04
	1600 (WAS21074)	56	BA3 2106	01/88 → 10/01		04
	1700 i Classic (VAZ2107)	62	B032123	06/96 →		04
LAIKA	1500	49	BA3 2103	05/93 → 04/05		04
	1500 S (WAS21093)	52	BA3 21083	06/89 →		04
	1.6 (WAS21074)	56	BA3 2106	01/88 → 10/01		04
	1600 (WAS21074)	56	BA3 2106	01/88 → 10/01		04
	1700 i Classic (VAZ2107)	62	B032123	06/96 →		04
MATRIUSHKA	1500	49	BA3 2103	08/94 →	→ 01/96	04
	1700	62	B032123	08/94 →		04
NADESCHDA	1.7	60	VAZ-2121.3	12/97 → 12/06		04
	1.8	60	VAZ-2130	12/97 → 12/06		04
	1.8 i	67	VAZ-2130.1	12/97 → 12/06		04
NIVA	1.6	54	BA3 2121	01/87 → 03/95		04
	1.7 i	59	BA3 21214	06/96 →		04
	1700 i	60	BA3 21214	10/00 →		04
	1700 i 4x4	60	BA3 21214	10/00 →		04
NIVA II	1.7	61	BA3 21214	08/04 →		04
NOVA	1500	49	BA3 2103	05/93 → 04/05		04
	1500 S (WAS21093)	52	BA3 21083	06/89 →		04
	1.6 (WAS21074)	56	BA3 2106	01/88 → 10/01		04
	1600 (WAS21074)	56	BA3 2106	01/88 → 10/01		04
	1700 i Classic (VAZ2107)	62	B032123	06/96 →		04
NOVA Station wagon	1500	49	BA3 2103	08/94 →	→ 01/96	04
	1700	62	B032123	08/94 →		04
OKA	0.8	26	B6113E	02/88 →		02

CT6FMR

		kW				QTY
LADA						
RIVA	1500	49	BA3 2103	05/93 → 04/05		04
	1500 S (WAS21093)	52	BA3 21083	06/89 →		04
	1.6 (WAS21074)	56	BA3 2106	01/88 → 10/01		04
	1600 (WAS21074)	56	BA3 2106	01/88 → 10/01		04
	1700 i Classic (VAZ2107)	62	B032123	06/96 →		04
RIVA Station wagon	1500	49	BA3 2103	08/94 →	→ 01/96	04
	1700	62	B032123	08/94 →		04
SABLE	1100	39	BA3 21081	07/91 →		04
	1300	45	BA3 2108	07/91 →		04
		46	BA3 2108	05/90 →		04
		48	BA3 2108	05/89 → 07/97		04
		50	BA3 21115	02/96 →		04
	1500	50	BA3 21083	07/91 →		04
		52	BA3 2111	11/94 →		04
		53	BA3 21083	09/91 →		04
	1.5	57	VAZ-2111	02/92 → 08/94		04
		59	VAZ-2111	08/03 → 12/07		04
SAGONA	1100	39	BA3 21081	07/91 →		04
	1300	45	BA3 2108	07/91 →		04
		46	BA3 2108	05/90 →		04
		48	BA3 2108	05/89 → 07/97		04
		50	BA3 21115	02/96 →		04
	1500	50	BA3 21083	07/91 →		04
		52	BA3 2111	11/94 →		04
		53	BA3 21083	09/91 →		04
	1.5	57	VAZ-2111	02/92 → 08/94		04
		59	VAZ-2111	08/03 → 12/07		04
SAMARA	1100	39	BA3 21081	02/88 → 12/94		04
		43	BA3 21081	02/96 →		04
	1300	45	BA3 2108	09/91 →		04
		46	BA3 2108	01/88 →		04
		50	BA3 21115	02/96 →		04
	1500	50	BA3 21083	09/91 →	06/95 → 07/03	04
		52	BA3 2111	02/95 →	→ 07/03	04
		53	BA3 21083	01/88 →		04
	1.5	57	VAZ-2111	02/92 → 08/94		04

MAGNETI MARELLI

CT6FMR

		kW				QTY
LADA						
SAMARA FORMA	1100	39	BA3 21081	07/91 →		04
	1300	45	BA3 2108	07/91 →		04
		46	BA3 2108	05/90 →		04
		48	BA3 2108	05/89 → 07/97		04
		50	BA3 21115	02/96 →		04
	1500	50	BA3 21083	07/91 →		04
		52	BA3 2111	11/94 →		04
		53	BA3 21083	09/91 →		04
	1.5	57	VAZ-2111	02/92 → 08/94		04
		59	VAZ-2111	08/03 → 12/07		04
SIGNET	1500	49	BA3 2103	05/93 → 04/05		04
	1500 S (WAS21093)	52	BA3 21083	06/89 →		04
	1.6 (WAS21074)	56	BA3 2106	01/88 → 10/01		04
	1600 (WAS21074)	56	BA3 2106	01/88 → 10/01		04
	1700 i Classic (VAZ2107)	62	B032123	06/96 →		04
TAIGA II	1.7	61	BA3 21214	08/04 →		04
VEGA	1.5	52	BA3 2111	02/92 → 08/94		04
		54	BA3 2111	01/95 →	→ 01/07	04
		56	VAZ-2111	10/00 →	→ 01/09	04
		57	VAZ-2111	01/95 →	→ 01/09	04
	1.6	60	VAZ-21114	01/00 →	→ 10/08	04
LANCIA						
DEDRA (835_)	1.6 i.e. (835AB)	57	835 A1.046	08/89 → 03/93		04
	1.8 i.e. (835AC, 835BC)	80	835 A2.000	09/89 → 06/94		04
	1.8 i.e. (835BD, 835AD)	77	835 A2.046	09/89 → 07/99		04
	2.0 i.e. (835AI)	86	835 A5.000	09/89 → 07/92		04
	2.0 i.e. (835AL)	83	835 A5.046	09/89 → 07/99		04
DELTA (831_)	1.6 GT i.e. (831AB.010)	66	149 C2.000	05/87 → 08/92		04
		66	149 C2.000	05/87 → 08/92		04
DELTA II (836_)	1.4 i.e. (836AF, 836AH)	51	836 A4.000	10/94 → 08/99		04
		51	160 A1.046	10/94 → 08/99		04
	1.8 i.e. (836AG, 836AL)	66	835 C4.000	07/94 → 08/99		04
		66	836 A6.000	07/94 → 08/99		04
		66	836 C4.000	07/94 → 08/99		04
THEMA (834_)	2000 16V (834FA)	112	834 F1.000	08/92 → 12/93		04
	2000 i.e. 16V (834AA)	108	834 B2.000	05/88 → 08/92		04
	2000 i.e. 16V (834AI)	104	834 B2.246	02/89 → 05/92		04
	3000 V6 (834GD, 834FD)	126	834 F.000	08/92 → 07/94		06
Y10 (156_)	1.3 i.e. (156AB)	56	156 B.000	11/87 → 05/93		04
	1.3 i.e. (156AF)	53	146 A 5.046	02/89 → 12/95		04

CT6FMR

		kW				QTY
LAND ROVER						
DISCOVERY	3.5 4x4	98	15G	06/89 → 08/90		08
	3.5 4x4 (SALLJG)	113	22 D	06/89 → 06/94		08
	4.0 4x4	134	35 D	09/93 → 10/98		08
RANGE ROVER	3.5 4x4	107	31 D	01/87 → 09/90		08
MAZDA						
323 III	1.4	44	B3	04/87 → 07/89		04
ETUDE III	1.4	44	B3	04/87 → 07/89		04
FAMILIA III	1.4	44	B3	04/87 → 07/89		04
MITSUBISHI						
CHARIOT	2.0 4WD (N43W)	98	4G63 (SOHC 16V)	10/92 → 10/98		04
	2.0 GLXi (D04W)	74	4G63 (SOHC 8V)	06/88 → 04/91		04
	2.0 GLXi 4WD (D08W)	74	4G63 (SOHC 8V)	06/88 → 04/91		04
COLT III	1.3 (C51A)	51	4G13 (8V)	04/88 → 05/92	→ 06/90	04
	1.5 GLXi (C52A)	62	4G15	04/88 → 05/92		04
	1.6 GTi 16V (C53A)	91	4G61	04/88 → 05/90		04
DELICA III	2.0 (P23W, P23V)	82	4G63 (SOHC 16V)	06/94 → 05/02		04
ECLIPSE	2.0 i 16V (D22A, D27A)	110	4G63 (DOHC 16V)	04/91 → 11/95		04
	2.0 i 16V 4WD (D22A, D27A)	110	4G63 (DOHC 16V)	04/91 → 11/95		04
	2.0 Turbo	147	4G63 T (DOHC 16V)	12/98 → 03/94		04
ECLIPSE I	2.0 i 16V (D22A, D27A)	110	4G63 (DOHC 16V)	04/91 → 11/95		04
	2.0 i 16V 4WD (D22A, D27A)	110	4G63 (DOHC 16V)	04/91 → 11/95		04
	2.0 Turbo	147	4G63 T (DOHC 16V)	12/98 → 03/94		04
ECLIPSE II	2000 GS 16V (D32A)	107	4G63 (DOHC 16V)	12/95 → 04/99		04
ETERNA IV	1.6 (E31A)	55	4G32	01/88 → 10/92		04
	1.8 (E32A)	66	4G37	11/88 → 10/92		04
	2.0 (E39A, E38A, E33A)	80	4G63 (SOHC 8V)	04/89 → 10/92		04
	2.0 4WD (E33A, E38A, E39A)	80	4G63 (SOHC 8V)	04/89 → 10/92		04
	2.0 GTI 16V (E39A, E38A, E33A)	106	4G63 (DOHC 16V)	11/88 → 10/92		04
		107	4G63 (DOHC 16V)	11/88 → 10/92		04
	2.0 GTI 16V 4x4 (E38A, E39A, E33A)	106	4G63 (DOHC 16V)	07/89 → 12/92		04
ETERNA V	2.0 GLSI (E55A)	101	4G63 (SOHC 16V)	11/92 → 08/96		04
	2.0 GLSI 4WD (E75A)	101	4G63 (SOHC 16V)	11/92 → 08/96		04
EXPO	2.0 4WD (N43W)	98	4G63 (SOHC 16V)	10/92 → 10/98		04

MAGNETI MARELLI

CT6FMR

		kW				QTY
MITSUBISHI						
GALANT IV	1.6 (E31A)	55	4G32	01/88 → 10/92		04
	1.8 (E32A)	66	4G37	11/88 → 10/92		04
	2.0 (E39A, E38A, E33A)	80	4G63 (SOHC 8V)	04/89 → 10/92		04
	2.0 4WD (E33A, E38A, E39A)	80	4G63 (SOHC 8V)	04/89 → 10/92		04
	2.0 GTI 16V (E39A, E38A, E33A)	106	4G63 (DOHC 16V)	11/88 → 10/92		04
		107	4G63 (DOHC 16V)	11/88 → 10/92		04
	2.0 GTI 16V 4x4 (E38A, E39A, E33A)	106	4G63 (DOHC 16V)	07/89 → 12/92		04
GALANT V	2.0 (E55A)	90	4G63 (SOHC 16V)	04/93 → 03/95		04
	2.0 GLSI (E55A)	101	4G63 (SOHC 16V)	11/92 → 08/96		04
	2.0 GLSI 4WD (E75A)	101	4G63 (SOHC 16V)	11/92 → 08/96		04
L 300 III	2.0 (P13T)	85	4G63 (SOHC 16V)	07/94 → 04/00		04
	2.0 (P23W, P23V)	82	4G63 (SOHC 16V)	06/94 → 05/02		04
L 400	2.0 (PA3W)	83	4G63 (SOHC 16V)	06/96 → 10/02		04
	2.0 16V (PA3V/W, PB3V, PA3W)	85	4G63 (SOHC 16V)	05/95 → 05/00		04
L 300 EXPRESS III	2.0 (P23W, P23V)	82	4G63 (SOHC 16V)	06/94 → 05/02		04
LANCER III	1.5 12V (C12V)	66	4G15 (12V)	09/90 → 12/91		04
LANCER IV	1.3 (C61A)	44	4G13 (8V)	04/88 → 05/92		04
	1.6 GTi (C63A)	91	4G61	05/88 → 05/90		04
	1.6 i (C63A)	90	4G61	09/90 → 09/92		04
	1.8 GTi 16V (C68A)	100	4G67	11/89 → 05/92		04
MIRAGE III	1.6 Gti	92	4G61	06/88 → 11/91		04
NIMBUS	2.0 4WD (N43W)	98	4G63 (SOHC 16V)	10/92 → 10/98		04
	2.0 GLXi (D04W)	74	4G63 (SOHC 8V)	06/88 → 04/91		04
	2.0 GLXi 4WD (D08W)	74	4G63 (SOHC 8V)	06/88 → 04/91		04
SPACE WAGON	2.0 4WD (N43W)	98	4G63 (SOHC 16V)	10/92 → 10/98		04
	2.0 GLXi (D04W)	74	4G63 (SOHC 8V)	06/88 → 04/91		04
	2.0 GLXi 4WD (D08W)	74	4G63 (SOHC 8V)	06/88 → 04/91		04
OPEL						
ASCONA C	1.8	62	E 18 NV	09/87 → 08/88		04
	2.0 i	74	C 20 NEF	08/87 → 08/88		04
	2.0 i GT	95	20 SEH	03/87 → 08/88		04
ASTRA F	1.4	55	14 NV	09/91 → 09/93		04
	1.4 i	44	C 14 NZ	09/91 → 01/98		04
	1.4 Si	60	C 14 SE	03/92 → 09/98		04
	1.6 i	52	X 16 SZ	05/93 → 07/96		04
		55	C 16 NZ	03/92 → 09/98		04
		55	X 16 SZR	03/92 → 09/98		04
	1.6 Si	74	C 16 SE	05/92 → 12/94		04
	1.8 i	66	C 18 NZ	03/92 → 09/98		04
	2.0 i	85	C 20 NE	03/92 → 09/98		04
	2.0 i 16V	100	X 20 XEV	02/95 → 01/98		04
		110	C 20 XE	03/93 → 01/98		04

CT6FMR

		kW				QTY
OPEL						
CORSA A	1.4 S	53	14 NV	09/89 → 03/93		04
	1.6 GSI	72	C 16 SEI	09/89 → 03/93		04
		74	E 16 SE	05/88 → 03/92		04
		55	C 16 NZ	08/88 → 09/92		04
	1.6 GSI Cat	74	C 16 SE	02/92 → 03/93		04
KADETT E Cabriolet	1.3 S	55	13 S	03/87 → 02/93	→ 01/89	04
KADETT E	1.4 i	44	C 14 NZ	01/90 → 08/91		04
	1.4 S	55	14 NV	01/90 → 08/91		04
KADETT E Cabriolet	1.4 S	55	14 NV	08/90 → 02/93	→ 01/91	04
	1.6 i	60	16 SV	07/89 → 02/93	→ 01/91	04
	1.6 i Cat	55	C 16 NZ	10/87 → 02/93	→ 02/91	04
		55	C 16 LZ	10/87 → 02/93	→ 02/91	04
KADETT E	1.8	82	18 SE	12/88 → 08/91		04
		84	18 E	09/87 → 08/90		04
	1.8 i	66	18 SV	09/90 → 08/91		04
		66	C 18 NZ	09/90 → 08/91		04
		66	C 18 NT	09/90 → 08/91		04
	1.8 S	62	E 18 NV	09/87 → 08/91		04
	2.0 i	85	20 SE	03/87 → 08/91		04
		85	20 NE	03/87 → 08/91		04
	2.0 i Cat	85	C 20 NE	03/87 → 08/91		04
KADETT E Combo	1.4 i	44	C 14 NZ	08/91 → 07/94	→ 03/93	04
	1.6 i	55	C 16 NZ	08/91 → 07/94	→ 03/93	04
KADETT E Furgonato	1.6 i	55	C 16 NZ	08/89 → 09/93	→ 01/91	04
MONZA E	1.4 i	44	C 14 NZ	01/90 → 08/91		04
	1.4 S	55	14 NV	01/90 → 08/91		04
	1.8	84	18 E	09/87 → 08/90		04
	1.8 i	66	18 SV	09/90 → 08/91		04
		66	C 18 NZ	09/90 → 08/91		04
		66	C 18 NT	09/90 → 08/91		04
	1.8 S	62	E 18 NV	09/87 → 08/91		04
	2.0 i	85	20 SE	03/87 → 08/91		04
		85	20 NE	03/87 → 08/91		04
	2.0 i Cat	85	C 20 NE	03/87 → 08/91		04
OMEGA A	1.8	65	E 18 NVR	09/87 → 03/94		04
VECTRA A	1.4 S	55	14 NV	09/88 → 06/92		04
	1.6	60	16 SV	09/88 → 05/93		04
	1.6 S	60	16 SV	09/88 → 05/93		04
	1.8 S	65	E 18 NVR	09/88 → 07/89		04
		66	18 SV	09/89 → 10/90		04
	1.8 S 4x4	65	E 18 NVR	01/89 → 07/89		04
	2.0 i	95	20 SEH	09/88 → 09/92		04
	2.0 i 4x4	95	20 SEH	01/89 → 09/92		04
	2.0 i GT	95	20 SEH	09/88 → 11/95		04

MAGNETI MARELLI

CT6FMR

		kW				QTY
PIAGGIO						
APE TRUCK	1.0	35	CB42	07/94 →		03
		33	CB41	02/93 → 06/94		03
PORTER	1.0	35	CB42	07/94 → 07/02		03
		33	CB41	02/93 → 05/98		03
PORSCHE						
944	2.5	118	M 44.09	08/87 → 12/90		04
		118	M 44.05	08/87 → 12/90		04
		118	M 44.10	08/87 → 12/90		04
PROTON						
AEROBACK	1.3	50	4 G 13	01/91 → 09/93		04
		55	4 G 13	10/88 → 11/96		04
	1.5	55	4 G 15	01/91 → 09/93		04
ISWARA	1.3	55	4 G 13	10/88 → 11/96		04
		50	4 G 13	01/91 → 09/93		04
	1.5	55	4 G 15	01/91 → 09/93		04
MPI	1.3	50	4 G 13	01/91 → 09/93		04
		55	4 G 13	10/88 → 11/96		04
	1.5	55	4 G 15	01/91 → 09/93		04
PERSONA	1.3	55	G 13 B	03/96 →		04
	1.5	64	G 15 B	09/96 →		04
	313i	55	G 13 B	03/96 →		04
	315 GLSi	64	G 15 B	09/96 →		04
SAGA	1.3 GLS 12V	50	4 G 13	01/91 → 06/96		04
	1.5 GLS 12V	55	4 G 15	01/91 → 06/96		04
SALOON	1.3	50	4 G 13	01/91 → 09/93		04
	1.5	55	4 G 15	01/91 → 09/93		04
SATRIA	1.3	55	G 13 B	03/96 →		04
	1.5	64	G 15 B	09/96 →		04
	313i	55	G 13 B	03/96 →		04
	315 GLSi	64	G 15 B	09/96 →		04
RENAULT						
4	1.0	25	C1C 708	06/87 → 12/93	08/90 → 01/92	04
	1.0 (112C)	25	C1C 708	06/87 → 06/93	→ 01/92	04
1919	1.7	55	F2N 724	07/91 → 04/92		04
	1.7 (B/C53B)	54	F3N 741	09/88 → 04/92		04
		54	F3N 740	09/88 → 04/92		04
	1.7 (L53B)	54	F3N 741	10/89 → 04/92		04
		54	F3N 740	10/89 → 04/92		04
19 II	1.7	55	F3N 740	05/92 → 11/95		04
		55	F3N 741	05/92 → 11/95		04
	1.7 (B/C53B)	54	F3N 740	04/92 → 12/95		04
		54	F3N 741	04/92 → 12/95		04
	1.7 (L53B)	54	F3N 741	04/92 → 12/95		04
		54	F3N 740	04/92 → 12/95		04

CT6FMR

		kW				QTY
RENAULT						
19 II	1.8	79	F3P 700	05/92 → 11/95		04
		79	F3P 706	05/92 → 11/95		04
	1.8 (5/353F, B/C538)	79	F3P 765	05/94 → 12/95		04
		79	F3P 682	05/94 → 12/95		04
	1.8 (B/C538)	81	F3P 700	04/92 → 05/94		04
	1.8 (D53V, 853F, D53C)	79	F3P 764	07/94 → 06/96		04
		79	F3P 765	07/94 → 06/96		04
		79	F3P 682	07/94 → 06/96		04
	1.8 (D53Y)	65	F3P 704	04/92 → 06/96		04
		65	F3P 760	04/92 → 06/96		04
		65	F3P 708	04/92 → 06/96		04
		65	F3P 707	04/92 → 06/96		04
		65	F3P 706	04/92 → 06/96		04
		65	F3P 705	04/92 → 06/96		04
	1.8 (L538)	81	F3P 700	04/92 → 05/94		04
	1.8 (L53V, L538)	79	F3P 682	05/94 → 12/95		04
	1.8 (L53Y)	65	F3P 760	04/92 → 12/95		04
		65	F3P 704	04/92 → 12/95		04
		65	F3P 706	04/92 → 12/95		04
		65	F3P 707	04/92 → 12/95		04
		65	F3P 708	04/92 → 12/95		04
		65	F3P 705	04/92 → 12/95		04
21	1.4 (B48D)	51	C2J 770	09/89 → 05/93	→ 04/92	04
	1.7 (B48F)	54	F3N 726	09/89 → 10/92		04
	1.7 (L48N)	64	F2N 752	06/87 → 04/89		04
	1.7 Cat (K48F)	54	F3N 726	05/88 → 06/93	09/89 →	04
CLIO I	1.8	70	F3P 710	01/91 → 09/98		04
	1.8 (B/C57C, B/C57U)	65	F3P 714	01/91 → 09/98		04
	1.8 (B/C57C, B/C57U)	65	F3P 710	01/91 → 09/98		04
	1.8 Rsi (B/C579)	80	F3P 712	01/93 → 08/95		04
LAGUNA I	1.8	70	F3P 676	06/95 → 06/98		04
		69	F3P 674	06/95 → 02/01		04
	1.8 (B56A/B)	66	F3P 724	11/93 → 03/01		04
		66	F3P 720	11/93 → 03/01		04
	1.8 (B56S/T/0)	66	F3P 678	08/95 → 03/01		04
		66	F3P 670	08/95 → 03/01		04
	2.0	80	F3R 611	03/99 → 03/01		04
		84	F3R 768	06/95 → 02/01		04
		84	F3R 728	10/98 → 01/01		04
		84	F3R 722	06/95 → 02/01		04
	2.0 (B56C/H/N)	83	F3R 723	11/93 → 03/01		04
		83	F3R 722	11/93 → 03/01		04
	2.0 (K56C/H)	83	F3R 723	09/95 → 03/01		04
		83	F3R 722	09/95 → 03/01		04

MAGNETI MARELLI

CT6FMR

		kW				QTY
RENAULT						
MEGANE I	2.0 (EA0G)	84	F3R 798	04/97 → 08/03		04
		84	F3R 750	04/97 → 08/03		04
	2.0 i (EA0G)	80	F3R 791	03/99 → 08/03	→ 02/03	04
		80	F3R 796	03/99 → 08/03	→ 02/03	04
SUPER 5	1.2 (B/C40F)	40	C1G 720	01/87 → 08/90	10/87 →	04
		40	C1G 702	01/87 → 08/90	03/90 →	04
		40	C1G 722	01/87 → 08/90	03/90 →	04
	1.4 (B/C40J)	49	C2J 782	06/87 → 07/89		04
	1.4 (B/C40M)	44	C2J 784	06/87 → 08/90		04
TRAFIC	2.0 [RWD]	59	J5R 726	05/89 → 10/97		04
ROVER						
MINI	1000	30	99 HD 81	01/92 → 06/93		04
	1300	37	12 A2B	10/92 → 11/00		04
		37	12 A2L	04/92 → 10/96		04
		37	12 A2B	04/92 → 10/96		04
		39	12 A2D	01/92 → 04/95		04
		39	12 A2L	05/96 → 10/96		04
		45	12 A2A	01/91 → 12/91		04
		46	12 A2L	01/92 → 11/00		04
		46	12 A2E	01/92 → 11/00		04
	1300 / Cooper	45	12 A2A	06/91 → 02/94		04
MONTEGO	2.0 GTi	86	20 H	10/88 → 10/91		04
SEAT						
MARBELLA	0.9	29	09 NCA	01/87 → 12/93		04
		29	100 GL 7000	01/87 → 12/93		04
		32	08 NCB	07/97 → 10/98		04
	0.9 Cat	29	100 GL 7000	01/90 → 11/96		04
		29	09 NCB	01/90 → 11/96		04
		30	08 NCB	11/96 → 10/98		04
TERRA	0.9	29	09 NCA	02/87 → 12/96		04
	0.9 Cat	29	09 NCB	02/92 → 12/94		04
SUZUKI						
CARRY	1.3	58	G13BB	03/99 →		04
SWIFT II	1.0 (SF310, AA44)	37	G10A	03/89 → 05/01	09/96 →	03
	1.0 i (SF310, AA44)	39	G10A	01/95 → 12/05	09/96 →	03
		40	G10A	03/89 → 12/91		03
	1.3 (SF 413)	51	G13BA	03/89 → 10/96	09/96 →	04
		63	G13BB	06/01 → 12/03		04
	1.3 (SF413, AB35)	50	G13A	03/89 → 05/01	→ 08/96	04
	1.3 4WD (SF413, AF35)	52	G13A	10/89 → 12/91		04
	1.3 CINO (SF413, AB35)	50	G13A	03/89 → 05/01	→ 08/96	04
	1.3 GTi (SF413, AA34)	74	G13B	03/89 → 05/01	→ 08/96	04

CT6FMR

		kW				QTY
VAUXHALL						
ASTRA Mk II	1.4 i	44	C 14 NZ	01/90 → 08/91		04
	1.4 S	55	14 NV	01/90 → 08/91		04
	1.6 i	60	16 SV	01/87 → 12/91		04
	1.6 S	60	16 SV	01/89 → 12/91		04
	1.8 i	83	18 E	01/90 → 08/91		04
ASTRAVAN Mk III (F)	1.4 i	44	C 14 NZ	01/91 → 10/94		04
	1.6 i	52	X 16 SZ	02/94 → 10/96		04
		55	C 16 NZ	01/91 → 08/98		04
BRAVA Pick-up	2.3 (TFR16)	69	4 ZD1	08/91 → 08/94		04
		72	23 P	08/94 → 09/96		04
	2.3 4x4 (TFS16)	69	4 ZD1	06/90 → 08/94		04
		72	23 P	08/94 → 09/96		04
CARLTON Mk III	1.8	65	E 18 NVR	09/87 → 03/94		04
CAVALIER Mk II	2.0 SRi 130	95	20 SEH	03/87 → 08/88		04
CAVALIER Mk III	1.4 S	55	14 NV	09/88 → 11/95		04
	1.6	60	16 SV	09/88 → 05/93		04
	1.8	66	18 SV	09/88 → 08/95		04
		66	C 18 NZ	09/88 → 08/95		04
	2.0 i 4x4	95	20 SEH	09/88 → 09/92		04
	2.0 SRi	95	20 SEH	09/88 → 09/92		04
MIDI II Autobus	2.0	62	4ZC1	06/88 → 08/97	01/93 →	04
NOVA	1.4	44	C 14 NZ	10/90 → 08/92		04
	1.4 S	55	14 NV	01/90 → 02/93		04
VOLKSWAGEN						
PASSAT (32B)	1.6	51	PP	08/87 → 03/88		04
VOLVO						
340-360	2.0	80	B 200 F	08/88 → 07/89		04
		81	B 200 F	08/87 → 07/88		04
440 K	1.7	58	B 18 KD	09/88 → 08/92		04
		60	B 18 KP	09/88 → 08/89		04
		60	B 18 K	09/88 → 08/89		04
		64	B 18 KP	09/88 → 12/96		04
		70	B 18 F	08/88 → 07/89		04
		75	B 18 FP	08/89 → 12/96		04
		78	B 18 EP	09/88 → 12/96		04
	1.8	66	B 18 U	08/91 → 07/96		04
		66	B 18 U	09/95 → 12/96		04
460 L	1.7	58	B 18 KD	09/89 → 08/91		04
		64	B 18 KP	09/88 → 07/96		04
		66	B 18 KP	09/90 → 07/96		04
		75	B 18 EP	08/89 → 07/92		04
		80	B 18 E	08/89 → 07/92		04
	1.8	66	B 18 U	08/91 → 07/96		04

MAGNETI MARELLI

CT6FMR

		kW				QTY
VOLVO						
740	2.0	76	B 200 K	09/88 → 08/90		04
		82	B 200 F	08/89 → 07/91		04
	2.0 Turbo	114	B 200 FT	09/90 → 08/91		04
	2.3	85	B 230 F	08/87 → 07/92		04
		100	B 230 FB	08/89 → 07/90		04
		111	B 234 F	08/88 → 08/92		04
		114	B 234 F	08/88 → 07/91		04
		117	B 234 F	08/87 → 07/89		04
	2.3 Turbo	121	B 230 FT	08/89 → 07/90		04
		121	B 230 GT	08/89 → 07/90		04
		125	B 230 FT	09/89 → 08/91		04
		125	B 230 GT	09/89 → 08/91		04
		140	B 230 FT	08/89 → 07/90		04
760	2.3	121	B 230 FT	01/88 → 07/92		04
	2.3 Turbo	115	B 230 FT	09/87 → 08/90		04
940	2.0	82	B 200 F	01/92 → 07/94		04
	2.0 Turbo	114	B 200 FT	08/90 → 12/94		04
	2.3	85	B 230 FD	08/92 → 07/94		04
		96	B 230 G	08/90 → 12/94		04
		96	B 230 FB	08/90 → 12/94		04
		114	B 234 G	08/90 → 07/91		04
		114	B 234 F	08/90 → 07/91		04
		118	B 230 FT	09/90 → 09/93		04
	2.3 Turbo	121	B 230 FT	08/90 → 07/94		04
		140	B 230 FT+	08/91 → 07/93		04
960	2.0	140	B 204 FT	08/90 → 09/93		04
	2.3 Turbo	121	B 230 FT	09/90 → 08/93		04
940 II	2.3	85	B 230 FD	08/94 → 07/95		04
		96	B 230 FB	08/94 → 10/98		04
	2.3 T	99	B 230 FK	01/95 → 10/98		04
	2.3 ti	99	B 230 FK	01/95 → 10/98		04
	2.3 Turbo	126	B 230 FT	01/95 → 12/98		04

CT6KHMR11

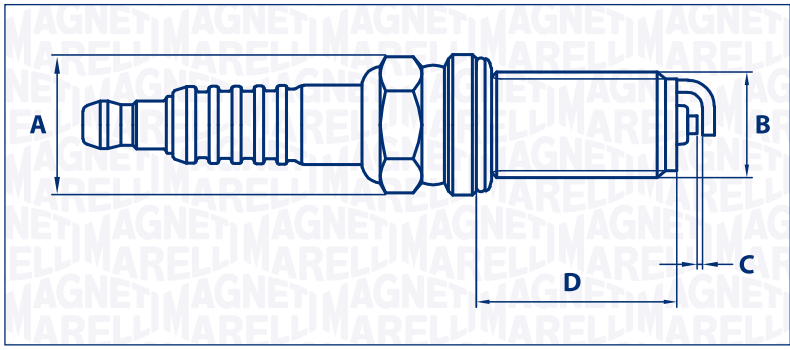

A	Hexagon Size	16
B	Thread Size	M14×1.25
C	Gap (mm)	1.1
D	Thread Reach	20.5
	Heat Range	6
	Type	Resistor
	Version	1 Mass Electrode
	Seat	Flat
	Core	Copper

BERU

0002335719 0002336738 14 FR-7 NUX2 14FR7MU2
14FR8NQU213 Z184 Z273

BOSCH

0 242 235 758 0 242 235 791 0 242 240 635 FGR 6 NQE0
FQR 7 ME FR 7 SE

CHAMPION

OE035/T10 OE178/R04 OE178/T10 REC9MCLX
REC9YCL

DENSO

K20HR-U11

NGK

3672 4704 6668 6677
92734 LFR6A LFR6A11 LFR6B
LFR6C LFR6D

		kW				QTY
CITROËN						
C4 Coupé	2.0 16V	130	RFK (EW10J4S)	11/04 → 12/10		04
C4 I	1.6 16V Bio-Flex	80	NFU (TU5JP4)	09/07 → 07/08		04
	2.0 16V	130	RFK (EW10J4S)	11/04 → 07/08	→ 08/05	04
C5 III	2.0 16V BioFlex	103	RFJ (EW10A)	02/08 →		04
	2.0 Exclusive BioFlex 16V	103	RFJ (EW10A)	02/08 →		04
C5 III Break	2.0 16V BioFlex	103	RFJ (EW10A)	02/08 →		04
C8	2.2	116	3FZ (EW12J4)	07/02 →	→ 09/05	04
DISPATCH	2.0 i	103	RFH (EW10A)	01/07 →		04
JUMPY	2.0 i	103	RFH (EW10A)	01/07 →		04
FIAT						
ULYSSE (179_)	2.0	100	RFN (EW10J4)	08/02 → 06/11	→ 10/05	04
LANCIA						
PHEDRA (179_)	2.0 (179AXA11)	100	RFN (EW10J4)	09/02 → 11/10		04
ZETA (22_)	2.0 16V (220AQ5)	100	RFN	07/00 → 09/02		04
MITSUBISHI						
COLT	1.5	80	4A91	05/06 → 07/09		04
COLT VI	1.1	55	3A91	10/04 → 06/12		03
	1.1 LPG	55	3A91	10/04 → 06/12		03
	1.5	80	4A91	06/04 → 06/12		04
	1.5 (Z23)	77	4A91	07/06 → 06/12		04
	1.5 4WD	77	4A91	07/06 → 06/12		04

MAGNETI MARELLI

CT6KHMR11

		kW				QTY
MITSUBISHI						
MIRAGE VI	1.1	55	3A91	10/04 → 06/12		03
	1.1 LPG	55	3A91	10/04 → 06/12		03
	1.5	80	4A91	06/04 → 06/12		04
	1.5 (Z23)	77	4A91	07/06 → 06/12		04
	1.5 4WD	77	4A91	07/06 → 06/12		04
NISSAN						
ALMERA II	1.8	94	QG18DE	01/02 →		04
PULSAR II	1.8	94	QG18DE	01/02 →		04
PULSAR VII	1.8	94	QG18DE	01/02 →		04
SENTRA II	1.8	94	QG18DE	08/02 →		04
SUNNY II	1.8	94	QG18DE	01/02 →		04
X-TRAIL	2.0	110	QR20DE	09/01 →	→ 03/07	04
	2.0 4x4	110	QR20DE	09/01 →	→ 03/07	04
	2.5 4x4	132	QR25DE	11/02 →	→ 03/07	04
PEUGEOT						
206	2.0 RC	130	RFK (EW10J4S)	07/03 →		04
207 Tre volumi	1.6 Bioflex	83	N6A (TU5JP4)	01/08 →		04
	1.6 Passion XS Bioflex	83	N6A (TU5JP4)	01/08 →		04
307	1.6 BioFlex	80	NFU (TU5JP4)	09/07 →		04
	2.0 16V	130	RFK (EW10J4S)	06/05 →	→ 11/07	04
307 CC	2.0 16V	130	RFK (EW10J4S)	10/03 →	→ 03/09	04
308	1.6 BioFlex	80	NFU (TU5JP4)	04/08 →		04
		82	NFU (TU5JP4)	03/09 →		04
	2.0 BioFlex	103	RFJ (EW10A)	01/08 →		04
308 CC	2.0 CVVT	103	RFJ (EW10A)	07/09 → 11/14		04
SMART						
FORFOUR (454)	1.1 (454.030)	55	M 134.910	01/04 → 06/06		06
	1.1 (454.033)	47	M 134.911	02/05 → 06/06		06
	1.3 (454.031)	70	M 135.930	01/04 → 06/06		06
	1.5 (454.032)	80	M 135.950	01/04 → 06/06		06
TOYOTA						
4 RUNNER	4.0 VVTi	183	1GR-FE	08/02 → 11/02		06
FORTUNER	4.0 4WD (GGN50_, GGN60_)	175	1GR-FE	03/09 → 05/15		06
	4.0 (GGN50_, GGN60_)	175	1GR-FE	07/05 → 05/15		06
HILUX	4.0	175	1GR-FE	02/05 → 07/97		06
	4.0 4WD	175	1GR-FE	02/05 → 11/10		06
HILUX (VIGO) VII	4.0 4WD	175	1GR-FE	08/05 →		06
HILUX SW4	4.0 (GGN50_, GGN60_)	175	1GR-FE	07/05 → 05/15		06
	4.0 4WD (GGN50_, GGN60_)	175	1GR-FE	03/09 → 05/15		06
HILUX VII	4.0 4WD	175	1GR-FE	08/05 →		06

CT6KHMR11

		kW				QTY
TOYOTA						
LAND CRUISER	4.0	179	1GR-FE	09/02 → 08/04		06
	4.0 (GRJ125_)	183	1GR-FE	01/03 →		06
	4.0 (GRJ200_)	176	1GR-FE	01/10 →		06
	4.0 4x4	170	1GR-FE	07/92 → 10/97		06
	4.0 V6 WTi (GRJ12)	179	1GR-FE	09/02 → 08/04		06
LAND CRUISER 150	4.0 V6 Dual VVTi	205	1GR-FE	01/10 →	→ 10/11	06
	4.0 V6 VVTi	203	1GR-FE	01/10 →	→ 10/11	06
		183	1GR-FE	01/10 →	→ 10/11	06
	4.0 V6 VVT-i (GRJ150_)	207	1GR-FE	01/10 →	→ 10/11	06
LAND CRUISER 200	4.0 (GRJ200_)	176	1GR-FE	01/10 →		06
SW4	4.0 4WD (GGN50_, GGN60_)	175	1GR-FE	03/09 → 05/15		06
	4.0 (GGN50_, GGN60_)	175	1GR-FE	07/05 → 05/15		06
VOLVO						
C30	2.4 i	125	B 5244 S4	10/06 → 12/12		05
C70 II	2.4	103	B 5244 S5	03/06 →	→ 04/10	05
	2.4 i	125	B 5244 S4	03/06 →	→ 04/10	05
S40 II	2.4	103	B 5244 S5	01/04 →		05
		125	B 5244 S4	01/04 →		05
	2.4 AWD	125	B 5244 S4	08/06 →		05
V50	2.4	103	B 5244 S5	04/04 →		05
		125	B 5244 S4	04/04 →		05
	2.4 AWD	125	B 5244 S4	08/06 →		05

CT6KMMR

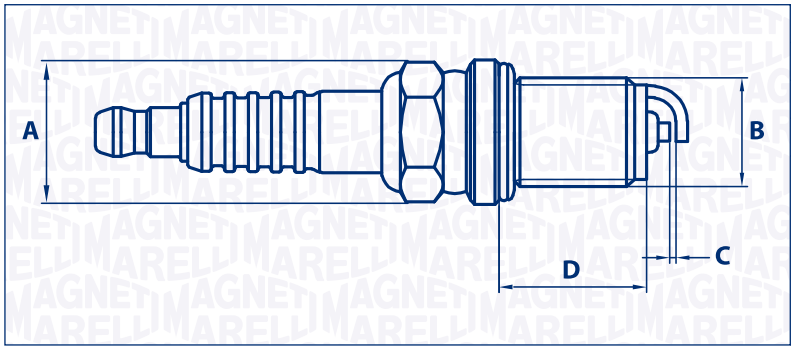

A	Hexagon Size	16
B	Thread Size	M14×1.25
C	Gap (mm)	0.8
D	Thread Reach	19.0
	Heat Range	6
	Type	Resistor
	Version	1 Mass Electrode
	Seat	Flat
	Core	Copper

CHAMPION

C9Y, OE003/T10, OE005/T10, OE023/T10
RC9Y, RC9YCE

DENSO

Q20PR-U

NGK

1269, 1297, 2330, 4046
5860, 6129, 6237, 96178
BCP6E, BCPR6E, BCPR6ES, VL12
VL17, V-Line 12, V-Line 17

MAGNETI MARELLI

CT6KMMR

		kW				QTY
ASTON MARTIN						
VIRAGE	5.3	246	40HTA	01/88 → 12/92		08
		246	40HTE	09/90 → 12/95		08
		246	40HTE	01/88 → 12/92		08
		246	40HTE	01/95 → 12/95		08
		246	40HTE	01/94 → 12/95		08
		246	40HTE	01/93 → 12/95		08
CITROËN						
AX	14 GT	59	KDZ (TU3M/Z)	01/89 → 12/91		04
BX	16	58	B1A (XU51C/K)	09/87 → 02/93	→ 12/91	04
	16 E	65	BDY (XU5M)	05/89 → 02/93		04
		65	BDZ (XU5M)	05/89 → 02/93		04
	19 E	80	DDZ (XU9M)	06/88 → 02/93		04
	19 E 4x4	80	D2F	04/89 → 02/93		04
	19 GTi	88	DKZ (XU9JA)	06/88 → 02/93		04
	19 GTi 4x4	88	DKZ (XU9JA)	06/88 → 02/93		04
BX Break	16	65	BDY (XU5M)	05/89 → 12/94		04
		65	BDZ (XU5M)	05/89 → 12/94		04
	19	80	DDZ (XU9M)	06/88 → 12/94		04
		88	DKZ (XU9JA)	06/88 → 12/94		04
	19 4x4	78	D2E	06/89 → 05/91		04
		80	DDZ (XU9M)	10/90 → 05/91		04
C15	1.4 i	55	KDY (TU3FM)	05/91 → 12/96		04
		55	KDY (TU3M)	05/91 → 12/96		04
DISPATCH	1.6	58	1580 SPI	10/95 →	→ 12/03	04
		58	220 A2.000	10/95 →	→ 12/03	04
DISPATCH Van	1.6 i	58	1580 SPI	10/95 →		04
		58	220 A2.000	10/95 →		04
EVASION	2.0	89	RFU (XU10J2/C)	06/94 → 07/02		04
	2.0 GLX	89	RFU (XU10J2/C)	06/94 → 07/02		04
JUMPER	2.0 4x4	80	RFW (XU10J2U)	08/96 → 04/02		04
	2.0 i	80	RFW (XU10J2U)	03/94 → 04/02		04
JUMPY	1.6	58	1580 SPI	10/95 →	→ 12/03	04
		58	220 A2.000	10/95 →	→ 12/03	04
	1.6 i	58	1580 SPI	10/95 →		04
		58	220 A2.000	10/95 →		04
RELAY	2.0	80	RFW (XU10J2U)	03/94 → 04/02		04
	2.0 4x4	80	RFW (XU10J2U)	08/96 → 04/02		04
	2.0 i	80	RFW (XU10J2U)	03/94 → 04/02		04
SYNERGIE	2.0	89	RFU (XU10J2/C)	06/94 → 07/02		04
	2.0 GLX	89	RFU (XU10J2/C)	06/94 → 07/02		04
XM	2.0	94	R6A	05/89 → 06/94	→ 12/89	04
	2.0 i	79	RDZ (XU10MZ)	05/89 → 04/94		04
		89	RFZ (XU10J2)	05/89 → 06/94		04

CT6KMMR

		kW				QTY
CITROËN						
ZX (N2)	1.4	55	KDZ (TU3M/Z)	03/91 → 06/97		04
	1.6 i	65	BDY (XU5M)	03/91 → 06/97		04
		65	BFZ (XU5JP)	03/91 → 06/97		04
	1.9 i	88	DKZ (XU9JA)	03/91 → 06/97	→ 06/94	04
FIAT						
DUCATO (230_)	2.0	80	RFW	06/98 → 04/02		04
		80	RFW	03/94 → 04/02		04
	2.0 4x4	80	RFW	11/94 → 11/01		04
	2.0 Panorama/ Combinato	80	RFW	03/94 → 04/02		04
PANDA (141_)	750 Cat (141AM)	25	156 A4.048	01/95 → 10/03		04
	1100	37	156 C.046	05/91 → 12/99		04
	1000 i.e. Cat	33	141 C2.000	10/87 → 08/98		04
		33	156 A2.246	10/87 → 08/98		04
	1100 Trekking 4x4	37	156 C.046	10/91 → 07/04	→ 12/00	04
PANDA Van (141_)	1.1	37	156 C.046	05/91 → 03/95		04
	1000 i.e	33	156 A2.246	08/92 → 02/04		04
PUNTO (176_)	55 1.1	40	176 A6.000	09/93 → 09/99		04
		40	176 B2.000	09/93 → 09/99		04
	60 1.2	43	176 A7.000	01/94 → 09/99		04
		44	176 B4.000	03/94 → 09/99		04
		44	176 B1.000	03/94 → 09/99		04
	75	54	176 A8.000	10/93 → 09/99		04
	75 1.2	54	176 A8.000	10/93 → 09/99		04
PUNTO Cabriolet (176_)	60 1.2	43	176 A7.000	04/94 → 06/00		04
		44	176 B1.000	05/95 → 06/00		04
		44	176 B4.000	05/95 → 06/00		04
TIPO (160_)	1.1 (160.AA)	41	160 A3.000	01/88 → 10/91		04
UNO (146_)	50 1.1	37	156 C.046	01/90 → 12/93		04
	50 i.e. 1.1	36	146 C3.000	06/92 → 12/93		04
	60 1.1	42	160 A3.000	04/89 → 12/92		04
FORD						
ESCORT V	1.6	66	LUJ	07/90 → 08/92		04
		66	LUK	07/90 → 08/92		04
ESCORT VI	1.4	55	F4B	01/94 → 01/95		04
		55	FUH	01/94 → 01/95		04
FIESTA III	1.6	66	LUH	03/89 → 12/92		04
GRANADA I	2.0	80	N8A	11/88 → 10/92		04
	2.0 i	85	N9F	09/91 → 09/94		04
		88	N9D	05/89 → 09/94		04
GRANADA III	2.0	80	N8A	11/88 → 10/92		04
	2.0 i	85	N9F	09/91 → 09/94		04
		88	N9D	09/91 → 09/94		04
ORION III	1.6	66	LUK	07/90 → 12/92		04
		66	LUJ	07/90 → 12/92		04

MAGNETI MARELLI

CT6KMMR

		kW				QTY
FORD						
SCORPIO I	2.0	80	N8A	11/88 → 10/92		04
	2.0 i	85	N9F	09/91 → 09/94		04
		88	N9D	05/89 → 09/94		04
SIERRA	2.0	77	N8C	01/87 → 02/93		04
		77	NES	01/87 → 02/93		04
		80	N8A	07/89 → 12/92		04
	2.0 4x4	88	N9C	01/90 → 02/93		04
		92	N9C	01/90 → 02/93		04
	2.0 i	88	N9C	01/90 → 02/93		04
		90	N9A	01/90 → 02/93		04
		92	N9C	01/90 → 02/93		04
		92	N9B	06/89 → 02/93		04
	2.0 i DOHC	85	N9E	12/91 → 02/93		04
	2.9 i XR 4x4	110	B4A	08/88 → 02/93		06
JAGUAR						
XJ	4.0	163	9EPCNA	05/91 → 09/94		06
	4.0 XJS	163	9EPCNA	05/91 → 09/94		06
	6 3.2	155	9JPGRB	11/94 → 07/97		06
	6 3.2 24V	146	9BPMNA	09/90 → 11/94		06
LANCIA						
Y (840_)	1.2 (840AA, 840AF1A)	44	840 A3.000	03/96 → 09/03	09/00 →	04
	1.2 (840AA, 840AF1A)	44	188 A4.000	03/96 → 09/03	09/00 →	04
Y10 (156_)	1.0 Fire Catalytic-Conv (156AE)	33	156 A2.246	10/87 → 02/92	→ 06/89	04
	1.0 Fire Trazione integrale	37	156 A2.000	12/87 → 02/90		04
	1.0 Fire Trazione integrale (156AE)	33	156 A2.246	12/87 → 02/92		04
		33	156 A2.000	12/87 → 02/92		04
	1.1 Fire (156AG)	40	176 B2.000	01/95 → 12/95		04
	1.1 i.e Fire (156AC)	42	156 C.000	08/89 → 06/92		04
	1.1 i.e Fire Trazione integrale (156AC)	42	156 C.000	08/89 → 06/92		04
	1.1 i.e. Fire (156AG)	37	156 C.046	07/89 → 09/95		04
	1.1 i.e. Fire Trazione integrale (156AG)	37	156 C.046	09/92 → 12/95		04
MAZDA						
626 III	2.0	66	FE (12V)	09/87 → 10/90		04
	2.0 12V	79	FE (12V)	09/87 → 05/92		04
929 III	2.2 12V	85	F21	01/88 → 04/89		04
		85	F2	01/88 → 04/89		04
		85	F2E	01/88 → 04/89		04

CT6KMMR

		kW				QTY
MAZDA						
BONGO	E2000	60	FE (8V)	03/91 → 05/94		04
		60	FE61	03/91 → 05/94		04
		60	FE60	03/91 → 05/94		04
		70	FE (8V)	06/94 → 05/03		04
		71	FE (8V)	04/04 → 07/06		04
E-SERIE	2.0 i (SGE3, SGEW)	74	FE (12V)	08/99 → 10/01		04
	E2000	60	FE60	03/91 → 05/94		04
		60	FE (8V)	03/91 → 05/94		04
		60	FE61	03/91 → 05/94		04
		70	FE (8V)	06/94 → 05/03		04
		71	FE (8V)	04/04 → 07/06		04
LUCE III	2.2 12V	85	F2E	01/88 → 04/89		04
		85	F21	01/88 → 04/89		04
		85	F2	01/88 → 04/89		04
TELSTAR III	2.0	66	FE (12V)	09/87 → 10/90		04
	2.0 12V	79	FE (12V)	09/87 → 05/92		04
NISSAN						
HIKARI II	1.4 LX	55	GA14S	01/89 → 08/91		04
PULSAR II	1.4 LX	55	GA14S	10/88 → 08/91		04
PULSAR IV	1.4 LX	55	GA14S	01/89 → 08/91		04
SENTRA II	1.4 LX	55	GA14S	10/88 → 08/91		04
SUNNY II	1.4 LX	55	GA14S	10/88 → 08/91		04
OPEL						
MONTEREY A	3.2 (UBS25_)	130	6 VD1	06/92 → 07/98		06
VECTRA A	2000 16V 4x4	110	20 XEJ	01/89 → 10/90		04
	2000/GT 16V	110	20 XEJ	01/89 → 06/94		04
PEUGEOT						
205 I	1.4 CJ	49	K1D (TU3A)	03/89 → 12/94		04
205 II	1.1	40	H1B (TU1)	10/87 → 10/90		04
	1.1 XA	40	E1	07/87 → 10/88		04
	1.4 Cat	44	KAY (TU3CP)	08/87 → 09/93	→ 07/90	04
	1.6	66	171 (XU5S)	08/90 → 07/92		04
	1.6 Aut.	65	BDY (XU5M2Z)	05/90 → 09/98		04
306	1.8	74	LFZ (XU7JP)	05/93 → 05/01	→ 06/95	04
	1.8 ST	74	LFZ (XU7JP)	06/94 → 05/01	→ 06/95	04
	1.8 XSI	74	LFZ (XU7JP)	06/94 → 05/01	→ 06/95	04
309 I	1.5	63	Y2/K	06/87 → 12/89		04
	1.6	53	B1E (XU51C)	08/87 → 07/89		04
	1.9	80	DDZ (XU9M)	07/88 → 07/89		04
	1.9 GTI	88	DKZ (XU9JAZ)	07/88 → 07/89		04

MAGNETI MARELLI

CT6KMMR

		kW				QTY
PEUGEOT						
309 II	1.1	44	HDZ (TU1M)	08/90 → 12/93		04
	1.4	49	K1D (TU3A)	07/90 → 12/93	→ 10/92	04
	1.6	65	BDY (XU5M2Z)	07/89 → 12/93		04
		65	BDZ (XU5M)	07/89 → 12/93		04
		65	BDY (XU5M3Z)	07/89 → 12/93		04
		68	B2A (XU52C/K)	07/89 → 12/93		04
	1.9	72	DFZ (XU9J1)	08/89 → 12/93		04
		80	DDZ (XU9M)	10/90 → 12/93		04
	1.9 GTI	88	DKZ (XU9JAZ)	07/89 → 12/93		04
405	1.6	53	B1E (XU51C)	07/87 → 12/92		04
		55	B1E (XU51C)	07/87 → 06/88		04
		55	BAZ (XU5CP)	07/87 → 06/88		04
		65	BDY (XU5M2Z)	07/87 → 12/92		04
405 I	1.6	65	BDY (XU5M3Z)	10/88 → 08/92		04
		53	B1E (XU51C)	07/87 → 12/92		04
		55	B1E (XU51C)	07/87 → 06/88		04
		55	BAZ (XU5CP)	07/87 → 06/88		04
		65	BDY (XU5M2Z)	07/87 → 12/92		04
		65	BDZ (XU5M)	07/87 → 12/92		04
		66	BDZ (XU5M)	10/89 → 12/92		04
		69	B2A (XU52C/K)	01/87 → 12/92		04
	1.9	77	DFZ (XU9J1)	10/88 → 08/92		04
		80	DDZ (XU9M)	07/88 → 12/92		04
		88	DKZ (XU9JAZ)	07/88 → 12/92		04
	1.9 4x4	80	DDZ (XU9M)	07/88 → 12/92		04
	1.9 Injection	77	DFZ (XU9J1)	07/87 → 12/92		04
405 II	1.4	55	KDX (TU3MC)	08/92 → 10/95		04
	1.6	65	BDY (XU5M2Z)	08/92 → 10/95	01/95 →	04
		65	BFZ (XU5JP)	08/92 → 10/95	01/95 →	04
		65	BDZ (XU5M)	08/92 → 10/95	01/95 →	04
		65	BDY (XU5M3Z)	08/92 → 10/95	01/95 →	04
	1.8	74	LFZ (XU7JP)	08/92 → 10/95		04
	2.0	89	RFX (XU10J2)	08/92 → 10/95		04
	2.0 SRI	89	RFX (XU10J2)	08/92 → 10/95		04
605	2.0	89	RFZ (XU10J2Z)	06/89 → 09/99		04
BOXER	2.0 i	80	RFW (XU10J2)	03/94 → 04/02	→ 03/95	04
GRAND RAPID	1.4	55	TU32	06/96 →		04
		55	KFW (TU3JP)	06/96 →		04
		55	KFX (TU3JP)	06/96 →		04
J5	2.0	62	170D (XN1TACP)	10/90 → 02/94		04
PARTNER	1.4	55	TU32	06/96 →		04
		55	KFW (TU3JP)	06/96 →		04
RANCH MPV / Space wagon	1.4	55	KFX (TU3JP)	06/96 →		04
		55	TU32	06/96 →		04
		55	KFW (TU3JP)	06/96 →		04

CT6KMMR

		kW				QTY
SKODA						
FAVORIT (781)	1.3 135 X,LX,GLX (781)	40	781.135E	01/90 → 09/94		04
VOLVO						
960	2.9	150	B 6304 FS	08/90 → 07/94		06
		150	B 6304 G	08/90 → 07/94		06
		150	B 6304 F	08/90 → 07/94		06
960 II	2.5	125	B 6254 S	07/94 → 12/96		06

CT6KMR

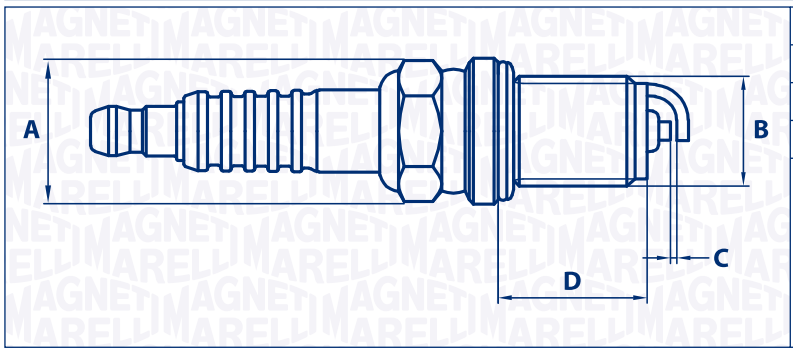

A	Hexagon Size	16
B	Thread Size	M14×1.25
C	Gap (mm)	0.8
D	Thread Reach	19.0
	Heat Range	6
	Type	Resistor
	Version	1 Mass Electrode
	Seat	Flat
	Core	Copper

BERU

0001330780	0002335707	0002335717	0002336724
0002340702	14 F-8 DUR	14 FR-7 DU2	14FR6DU
14FR7DU	14FR7DUW	Z15	Z193
Z227	Z24	Z247	

BOSCH

8	13	0 242 235 640	0 242 235 666
0 242 235 797	0 242 240 577	0 242 240 593	FR 6 DC
FR 6 DC 2	FR 7 DC	FR 7 DE 2	FR7DE

CHAMPION

9GYSSR	OE002/R04	OE002/T10	OE033/R04
OE033/T10	OE034/R04	OE034/T10	OE102/T10
OE119/T10	OE127/T10	RC10YCC	RC281YC
RC87YC	RC87YCC	RC87YCL	RC8YC
RC8YCC	RC8YCL	RC8YLC	RC9YC
RC9YCC			

DENSO

K20PR-U

NGK

3783	4619	4856	4876
5375	6717	6962	7373
94067	BKR6E	BKR6EN	BKR6ES
BKR6EZ	FR5	VL28	VL38
V-Line 28	V-Line 38		

		kW				QTY
AUDI						
A3 (8P1)	2.0 FSI	110	AXW	05/03 → 06/08		04
		110	BLY	05/03 → 06/08		04
		110	BLX	05/03 → 06/08		04
		110	BVZ	05/03 → 06/08		04
		110	BVY	05/03 → 06/08		04
		110	BLR	05/03 → 06/08		04
		110	BMB	05/03 → 06/08		04

MAGNETI MARELLI

CT6KMR

		kW				QTY
AUDI						
A3 (8PA)	2.0 FSI	110	BLX	09/04 → 06/08		04
		110	BVZ	09/04 → 06/08		04
		110	BVY	09/04 → 06/08		04
		110	BLR	09/04 → 06/08		04
		110	BLY	09/04 → 06/08		04
		110	AXW	09/04 → 06/08		04
		110	BMB	09/04 → 06/08		04
AUTOBIANCHI						
Y10	1.0 Cat	33	156A2.246	10/87 → 10/95	01/89 → 09/92	04
	1.1	42	156C.000	06/89 → 10/95	→ 12/94	04
	1.1 4WD	42	156C.000	06/89 → 10/95	→ 09/92	04
	1.1 i.e. Cat	42	156C.046	09/90 → 10/95		04
CHRYSLER						
CARAVAN III	2.0 i	98	C00	01/95 → 03/01		04
CIRRUS	2.0 LX	96	ECB	05/94 → 09/97		04
		98	ECB	10/97 → 09/00		04
GRAND VOYAGER III	2.0 i	98	C00	01/95 → 03/01		04
NEON	1.8 16V	85	EBD	09/97 → 08/99		04
	2.0 16V	98	420H	05/94 → 08/99		04
		107	ECC	06/94 → 08/99		04
		109	420T	04/96 → 08/99		04
NEON II	1.6	85	EJD	11/01 → 12/06	→ 09/05	04
	2.0 16V	97	ECB	10/02 → 12/06		04
		98	ECB	08/99 → 12/06		04
		98	420H	08/99 → 12/06		04
	2.0 16V R/T	110	ECH	10/01 → 12/06	→ 09/05	04
STRATUS	2.0 16V	98	ECB	12/95 → 04/01		04
	2.0 LE	96	420X	06/96 → 04/01		04
		96	C00	12/95 → 04/01		04
VOYAGER II	2.0 i	98	C00	01/95 → 03/01		04
VOYAGER III	2.0 i	98	C00	01/95 → 03/01		04
CITROËN						
AX	14	51	K1G	01/89 → 12/91		04
		55	KDZ (TU3M/Z)	04/87 → 04/97		04
		55	KDY (TU3M)	04/87 → 04/97		04
	11 Cat	40	HAZ (TU1CP)	09/88 → 12/89		04
BERLINGO (MF)	1.4	53	KFW (TU3JP)	11/02 → 10/05		04
	1.4 bivalent	48	KFW (TU3JP)	11/02 →		04
	1.4 i (MFKFX, MFKFW)	55	KFW (TU3JP)	07/96 →		04
		55	KFX (TU3JP)	07/96 →		04
	1.4 i bivalent (MFKFW)	55	KFW (TU3JP)	04/03 →		04
C2	1.1	44	HFX (TU1JP)	09/03 →	→ 01/10	04
	1.4	54	KFV (TU3JP)	09/03 →	→ 04/05	04
		55	KFV (TU3JP)	10/06 →	→ 01/10	04

CT6KMR

		kW				QTY
CITROËN						
C3 I	1.1 i	44	HFX (TU1JP)	02/02 →	→ 10/09	04
	1.4 Bioflex	60	KFV (TU3JP)	01/09 →		04
	1.4 i	54	KFV (TU3JP)	02/02 →	→ 10/09	04
	1.4 i Bivalent	54	KFV (TU3JP)	02/02 →	→ 10/09	04
	1.4 i GLX	54	KFV (TU3JP)	02/02 →	→ 10/09	04
C3 II	1.1 BiFuel	44	HFX (TU1A)	11/10 →	→ 01/11	04
	1.4	54	KFV (TU3A)	11/09 →		04
C3 Pluriel	1.4	54	KFV (TU3JP)	05/03 →	→ 01/11	04
	1.4 Hybrid	54	KFV (TU3JP)	05/05 →	→ 01/11	04
C15	1.3	47	G1A	07/87 → 05/88		04
	1.4	55	KDY (TU3M)	05/91 → 07/96		04
C15 Station wagon	1.1	40	HDZ (TU1M)	10/88 → 10/92		04
		44	HDZ (TU1M)	08/88 → 07/96	09/89 →	04
CHANSON	1.4 VTS	55	KFW (TU3JP)	05/96 → 06/03		04
		55	KFX (TU3JP)	05/96 → 06/03		04
	1.6 VTS	72	NFT (TU5JP)	09/00 → 09/03		04
EVASION	2.0 Turbo C.T.	108	RGX (XU10J2TE)	06/94 → 07/02		04
	2.0 VSX Turbo	108	RGX (XU10J2TE)	06/94 → 07/02		04
JUMPER	2.0	81	XU10J2	04/02 →	→ 06/06	04
	2.0 4x4	80	RFW (XU10J2U)	10/96 → 01/02		04
	2.0 bivalent	81	XU10J2	02/03 →	→ 06/06	04
NEMO	1.4	54	KFV (TU3A)	02/08 →		04
		54	KFV (TU3A)	04/09 →		04
		54	KFT (TU3A)	04/09 →		04
RELAY	2.0	81	XU10J2	04/02 →	→ 06/06	04
	2.0 4x4	80	RFW (XU10J2U)	10/96 → 01/02		04
	2.0 bivalent	81	XU10J2	02/03 →	→ 06/06	04
SAXO	1.4 VTS	55	KFW (TU3JP)	05/96 → 06/03		04
		55	KFX (TU3JP)	05/96 → 06/03		04
	1.6 VTS	72	NFT (TU5JP)	09/00 → 09/03		04
SYNERGIE	2.0 Turbo C.T.	108	RGX (XU10J2TE)	06/94 → 07/02		04
	2.0 VSX Turbo	108	RGX (XU10J2TE)	06/94 → 07/02		04
XANTIA (X1)	2.0 i 16V	110	RFT (XU10J4/Z)	06/94 → 01/98		04
		112	RFY (XU10J4/Z)	03/93 → 01/98		04
	2.0 Turbo	108	RGX (XU10J2TE)	06/95 → 01/98		04
XANTIA (X2)	1.6 i SX	65	BFZ (XU5JP)	01/98 → 03/01		04
	1.8 i	66	LFX (XU7JB)	01/98 → 04/03		04
	1.8 i 16V	81	LFY (XU7JP4)	01/98 → 04/03		04
	2.0 i	89	RFX (XU10J2C)	01/98 → 04/03		04
	2.0 i 16V	97	RFV (XU10J4R)	01/98 → 04/03		04
	2.0 Turbo	108	RGX (XU10J2TE)	01/98 → 04/03		04
XANTIA Break (X2)	2.0 i	89	RFX (XU10J2C)	01/98 → 04/03	→ 04/98	04
XM	2.0 Turbo	108	RGX (XU10J2TE)	05/94 → 10/00		04

MAGNETI MARELLI

CT6KMR

		kW				QTY
CITROËN						
XSARA	1.4 i	55	KFW (TU3JP)	04/97 → 03/05		04
		55	KFX (TU3JP)	04/97 → 03/05		04
	2.0 16V	120	RFS (XU10J4RS)	04/97 → 09/99		04
	2.0 i 16V	120	RFS (XU10J4RS)	02/98 → 03/05	→ 08/00	04
ZX (N2)	1.8	76	LFZ (XU7JP)	07/94 → 10/97		04
	1.9	93	D6E (XU9JA)	03/91 → 06/97	→ 08/92	04
	2.0 i 16V	112	RFY (XU10J4/Z)	07/94 → 10/94		04
	2.0 i Volcane 16V	114	RFT (XU10J4/Z)	07/92 → 10/97		04
		114	RFY (XU10J4/Z)	07/92 → 10/97		04
ZX Break (N2)	1.4 i	55	KFX (TU3JP)	10/93 → 10/97		04
		55	KDX (TU3M/Z)	10/93 → 10/97		04
		55	KDY (TU3M)	10/93 → 10/97		04
DACIA						
DUSTER	1.6 16V	77	K4M 690	04/10 →		04
	1.6 16V 4x4	77	K4M 606	06/10 →		04
	1.6 16V Hi-Flex	77	K4M 696	08/10 →		04
LODGY	1.6	61	K7M 828	03/12 →		04
LOGAN	1.4 (LSOA, LSOC, LSOE, LSOG)	55	K7J 710	09/04 →		04
	1.6 (LSOB, LSOD, LSOF, LSOH)	64	K7M 710	09/04 →		04
	1.6 16V (LS0M)	77	K4M 690	02/06 →		04
	1.6 16V Flexifuel	77	K4M 696	07/10 →		04
	1.6 Bifuel	62	K7M 718	05/10 →		04
LOGAN EXPRESS	1.4	55	K7J 710	03/09 →		04
	1.6	64	K7M 710	03/09 →		04
LOGAN MCV	1.4	55	K7J 710	02/07 →		04
	1.6	64	K7M 710	02/07 →		04
	1.6 16V	77	K4M 690	02/07 →		04
	1.6 16V Hi-Flex	77	K4M 690	11/09 →		04
LOGAN Pick-up	1.4	55	K7J 710	01/09 →		04
	1.6	64	K7M 710	03/08 →		04
	1.6 Bifuel	62	K7M 800	05/10 →		04
	1.6 MPI 85	62	K7M 800	05/10 →		04
SANDERO	1.6 16V Bifuel	77	K4M 690	01/11 →		04
		77	K4M 696	01/11 →		04
		77	K4M 694	01/11 →		04
SOLENZA	1.4 (B41A, B41B, B41C)	55	E7J 262	02/03 →		04
DODGE						
NEON	2.0 16V	98	ECB	05/94 → 08/99		04
NEON II	2.0 16V	98	ECB	08/99 →		04
STRATUS	2.0 16V	98	ECB	12/95 → 04/01		04

CT6KMR

		kW				QTY
DR						
DR 1	1.0 Bifuel	50	SQR472F	03/10 →		04
	1.3	61	SQR473	03/10 →		04
	1.3 LPG	61	SQR473	03/10 →		04
DR 2	1.3 Bifuel	61	SQR473	09/10 →		04
	1.3 LPG	61	SQR473	09/10 →		04
DR 5	1.6	87	SQR481F	01/11 →		04
	1.6 Bifuel	80	SQR481F	09/10 →		04
	1.6 LPG	80	SQR481F	01/11 →		04
	1.8	97	SQR481FC	01/11 →		04
	2.0 4WD	102	SQR484F	01/11 →		04
	2.0 Bifuel	94	SQR484F	01/11 →		04
	2.0 LPG	94	SQR484F	01/11 →		04
FIAT						
DUCATO (244_)	2.0	81	RFL	04/02 → 07/06		04
	2.0 4x4	81	RFL	05/02 → 07/06		04
	2.0 Bipower	81	RFL	11/02 →	→ 06/06	04
FIORINO (225_)	1.4	54	KFT	11/07 →		04
PALIO (178_)	1.2 (178DX.G1A)	54	178 B5.000	04/96 → 02/01		04
PUNTO (176_)	55 1.1	40	176 A6.000	09/93 → 09/99		04
		40	176 B2.000	09/93 → 09/99		04
PUNTO Van (176_)	1.1	40	176 B2.000	04/96 → 02/00		04
QUBO (225_)	1.4	54	KFT	02/08 →		04
STILO (192_)	1.8 16V (192_XC1A)	98	192 A4.000	10/01 → 11/06		04
ULYSSE (220_)	1.8 (220.BB5)	73	LFW	05/97 → 08/02		04
FORD						
FIESTA III	1.4	54	FUJ	03/89 → 12/95		04
GRANADA III	2.0 i	92	N9B	05/89 → 02/92		04
ORION III	1.4	54	FUH	07/90 → 12/93		04
SCORPIO I	2.0 i	92	N9B	05/89 → 02/92		04
TRANSIT	2.0 (EBL, EBS, ECL, EDS, EDL, EGL, ESS, ESL, EUS)	84	NSG	09/95 → 03/00		04
	2.0 CNG	84	NSH	06/94 → 03/00		04
TRANSIT TOURNEO	2.0	84	NSH	11/94 → 12/00		04
HYUNDAI						
ACCENT II	1.6	77	G4ED-G	12/02 → 11/05		04
ACCENT III	1.4 GL	71	G4EE	11/05 → 11/10		04
ACCENT IV	1.4 GL	71	G4EE	11/05 → 11/10		04
AVEGA III	1.4 GL	71	G4EE	11/05 → 11/10		04
EXCEL II	1.6	77	G4ED-G	12/02 → 11/05		04
S COUPE	1.5 i Turbo	85	G4EK-TC	04/91 → 05/96		04
VERNA II	1.6	77	G4ED-G	12/02 → 11/05		04
VERNA III	1.4 GL	71	G4EE	11/05 → 11/10		04

MAGNETI MARELLI

CT6KMR

		kW				QTY
INNOCENTI						
ELBA (146)	1.4 i.e. (146EN, 146EQ)	49	146 C5.000	09/94 → 12/96		04
		49	146 D5.000	09/94 → 12/96		04
JAGUAR						
XJ	6 Sovereign 4.0	177	9JPFRB	11/94 → 07/97		06
KIA						
CARENS I	1.8 i	81	T8	11/00 → 07/02		04
CARENS II	1.8	93	TB	07/02 →	→ 05/06	04
CERATO	1.8	85	T8	10/01 → 07/04		04
RIO	1.5	70	A5D	09/02 →		04
RIO	1.5 16V	71	A5D	09/02 → 02/05		04
SEPHIA	1.8 i 16V	81	T8	10/97 → 03/01	→ 08/98	04
SHUMA II	1.8	84	T8	04/03 → 08/04		04
SPECTRA	1.8	85	T8	10/01 → 07/04		04
SPECTRA II	1.8	81	T8	05/01 → 06/04		04
LADA						
110	2.0 i	110	C 20 XE	08/96 →		04
GRANTA	1.6	72	VAZ-21126	10/11 →		04
LARGUS	1.6	62	VAZ-K7M	03/12 →		04
VEGA	2.0 i	110	C 20 XE	08/96 →		04
LANCIA						
Y (840_)	1.1 (840AE)	40	176 B2.000	11/95 → 09/03	04/97 →	04
ZETA (22_)	2.0 16V (220AL5)	97	RFV (XU10J4R)	05/98 → 07/00		04
LAND ROVER						
DISCOVERY	2.0 16 V 4x4	99	20 T4H	06/89 → 10/98		04
MAZDA						
323 ASTINA IV	1.8 16V	103	BP31	09/89 → 03/93		04
323 C IV	1.8 16V	103	BP31	09/89 → 03/93		04
323 F IV	1.8 16V	103	BP31	09/89 → 03/93		04
626 III	1.8	65	F8 (12V)	11/87 → 05/92		04
ASTINA IV	1.8 16V	103	BP31	09/89 → 03/93		04
ETUDE IV	1.8 16V	103	BP31	09/89 → 03/93		04
		103	BP22	09/89 → 03/93		04
FAMILIA IV	1.8 16V	103	BP22	09/89 → 03/93		04
		103	BP31	09/89 → 03/93		04
TELSTAR III	1.8	65	F8 (12V)	11/87 → 05/92		04
MERCEDES-BENZ						
SL (R129)	500 SL (129.066)	240	M 119.960	09/89 → 08/92		08
		240	M 119.972	09/89 → 08/92		08
MITSUBISHI						
CHARIOT	1.8 (N31W)	90	4G93 (SOHC 16V)	10/91 → 10/98		04
	1.8 4WD (N41W)	90	4G93 (SOHC 16V)	10/91 → 10/98		04
EXPO	1.8 (N31W)	90	4G93 (SOHC 16V)	10/91 → 10/98		04
	1.8 4WD (N41W)	90	4G93 (SOHC 16V)	10/91 → 10/98		04
MONTERO CLASSIC	3.0 ZR	132	6G72 (DOHC 24V)	08/03 →		06
MONTERO III	3.0 (V73W)	125	6G72 (SOHC 24V)	10/01 → 12/06		06

CT6KMR

		kW				QTY
MITSUBISHI						
NIMBUS	1.8 (N31W)	90	4G93 (SOHC 16V)	10/91 → 10/98		04
	1.8 4WD (N41W)	90	4G93 (SOHC 16V)	10/91 → 10/98		04
PAJERO	3.0 (V73W)	125	6G72 (SOHC 24V)	10/01 → 12/06		06
	3.0 ZR	132	6G72 (DOHC 24V)	08/03 →		06
PAJERO CLASSIC	3.0 ZR	132	6G72 (DOHC 24V)	08/03 →		06
PAJERO III	3.0 (V73W)	125	6G72 (SOHC 24V)	10/01 → 12/06		06
RVR	1.8 (N11W)	85	4G93 (SOHC 16V)	06/96 → 08/99		04
SHOGUN III	3.0 (V73W)	125	6G72 (SOHC 24V)	10/01 → 12/06		06
SPACE RUNNER	1.8 (N11W)	85	4G93 (SOHC 16V)	06/96 → 08/99		04
SPACE WAGON	1.8 (N31W)	90	4G93 (SOHC 16V)	10/91 → 10/98		04
	1.8 4WD (N41W)	90	4G93 (SOHC 16V)	10/91 → 10/98		04
NISSAN						
PRIMERA	1.6	66	GA16DS	06/90 → 01/96		04
		71	GA16DS	06/90 → 01/96		04
		75	GA16DE	06/93 → 01/96		04
	2.0 GT	110	SR20DE	06/90 → 01/96		04
PULSAR III	1.4 i	55	GA14DS	10/90 → 05/95		04
		55	GA14DE	10/90 → 05/95		04
	1.6 i	66	GA16DE	10/90 → 05/95		04
		66	GA16DEL	10/90 → 05/95		04
		66	GA16DS	10/90 → 05/95		04
	1.6 i 16V 4WD	66	GA16DS	10/90 → 05/95		04
PULSAR V	1.4 i	55	GA14DE	10/90 → 05/95		04
		55	GA14DS	10/90 → 05/95		04
	1.6 i	66	GA16DS	10/90 → 05/95		04
		66	GA16DE	10/90 → 05/95		04
		66	GA16DEL	10/90 → 05/95		04
	1.6 i 16V 4WD	66	GA16DS	10/90 → 05/95		04
PULSAR VI	1.6	73	GA16DE	09/95 → 03/00		04
SABRE III	1.4 i	55	GA14DS	10/90 → 05/95		04
		55	GA14DE	10/90 → 05/95		04
	1.6 i	66	GA16DE	10/90 → 05/95		04
		66	GA16DEL	10/90 → 05/95		04
		66	GA16DS	10/90 → 05/95		04
SENTRA III	1.4 i	55	GA14DE	10/90 → 05/95		04
		55	GA14DS	10/90 → 05/95		04
	1.6 i	66	GA16DS	10/90 → 05/95		04
		66	GA16DEL	10/90 → 05/95		04
		66	GA16DE	10/90 → 05/95		04
	1.6 i 16V 4WD	66	GA16DS	10/90 → 05/95		04

MAGNETI MARELLI

CT6KMR

		kW				QTY
NISSAN						
SUNNY III	1.4 i	55	GA14DS	10/90 → 05/95		04
		55	GA14DE	10/90 → 05/95		04
	1.6 i	66	GA16DEL	10/90 → 05/95		04
		66	GA16DE	10/90 → 05/95		04
		66	GA16DS	10/90 → 05/95		04
	1.6 i 16V 4WD	66	GA16DS	10/90 → 05/95		04
TSUBAME III	1.6 i	66	GA16DE	06/91 → 03/00		04
		66	GA16DS	06/91 → 03/00		04
	1.6 i 16V 4x4	75	GA16DE	10/92 → 03/00		04
OPEL						
KADETT E	2.0 GSI 16V	115	20 XE	12/87 → 08/91		04
		110	20 XEJ	03/88 → 08/91		04
	2.0 GSI 16V Cat	110	C 20 XE	03/88 → 08/91		04
PEUGEOT						
106	1.4	51	K5A (TU3)	08/91 → 03/96		04
205 I	1.4	62	K2B (TU3S)	08/87 → 06/94	→ 07/88	04
	1.6	85	B6D (XU5JA)	08/87 → 07/92		04
	1.9 CTi	92	DKZ (XU9JAZ)	08/90 → 07/92		04
		74	DFZ (XU9J1)	08/87 → 07/90		04
205 II	1.4	63	Y2/K	06/87 → 12/89	→ 07/87	04
206	1.1	40	HFY (TU1JP)	08/98 → 07/00		04
	1.1 i	44	HFX (TU1JP)	09/98 →		04
		44	HFZ (TU1JP)	09/98 →		04
	1.4 i	55	KFW (TU3JP)	09/98 →		04
		55	KFX (TU3JP)	09/98 →		04
	1.4 LPG	55	KFV (TU3JP)	05/06 → 09/07		04
206 SW	1.4	55	KFV (TU3A)	07/02 →		04
		55	KFW (TU3JP)	07/02 →		04
	1.4 Presence	55	KFV (TU3A)	07/02 →		04
		55	KFW (TU3JP)	07/02 →		04
206+	1.1	44	HFX (TU1A)	01/09 →		04
		44	TU1AE5	01/09 →		04
		44	HFX (TU1JP)	01/09 →		04
	1.4 i	54	KFT (TU3A)	09/10 →		04
		55	KFV (TU3A)	01/09 →		04
		55	KFW (TU3A)	01/09 →		04
207	1.41.4	53	KFV (TU3A)	02/06 →		04
		54	KFT (TU3A)	12/07 →		04
		55	KFV (TU3A)	08/08 →		04
	1.4 Bioflex	60	KFW (TU3JP)	08/08 →		04
	1.4 XR Sport Bioflex	60	KFW (TU3JP)	08/08 →		04
207 Tre volumi	1.4 Flex	60	KFW (TU3A)	11/08 →		04
	1.4 Passion XR Flex	60	KFW (TU3A)	11/08 →		04

CT6KMR

		kW				QTY
PEUGEOT						
306	1.6	66	NFZ (TU5JP)	07/00 → 05/01		04
		72	NFT (TU5JP)	10/00 → 05/01		04
	2.0 S16	120	RFS (XU10J4RS)	03/96 → 05/01		04
307	1.4	55	KFW (TU3JP)	08/00 →	09/01 → 06/05	04
307 Break	1.4	55	KFW (TU3JP)	04/02 → 09/03		04
309 I	1.4	55	KDY (TU3M)	03/89 → 07/89		04
		55	KDZ (TU3M)	03/89 → 07/89		04
309 II	1.4	55	KDY (TU3M)	07/89 → 12/93		04
		55	KDZ (TU3M)	07/89 → 12/93		04
405 I	1.6	68	B2A (XU52C/K)	05/88 → 07/92		04
	1.9 4x4	88	DKZ (XU9JAZ)	07/90 → 07/92		04
406	2.0 16V	97	RFV (XU10J4R)	11/95 → 05/04		04
		99	RFR (DEW10J4)	01/99 → 08/00		04
406 Coupé	2.0 16V	99	RFV (XU10J4R)	04/99 → 09/04		04
		100	RFV (XU10J4R)	10/00 → 12/04		04
1007	1.4	54	KFV (TU3A)	04/05 →	→ 07/10	04
BIPPER	1.4	54	KFV (TU3A)	02/08 →		04
	2.0	81	RFL (XU10J2U)	12/01 → 04/02		04
BOXER	2.0	81	RFL (XU10J2U)	04/02 →	→ 06/06	04
GRAND RAPID	1.4	54	KFW (TU3JP)	11/02 → 10/06		04
PARTNER	1.4	54	KFW (TU3JP)	11/02 → 10/06		04
		54	KFV (TU3A)	11/02 → 10/06		04
	1.4 BiFuel	55	KFW (TU3JP)	04/03 →	→ 05/08	04
RANCH Furgonato	1.4	54	KFV (TU3A)	11/02 → 10/06		04
	1.4 BiFuel	55	KFW (TU3JP)	04/03 →	→ 05/08	04
RANCH MPV / Space wagon	1.4	54	KFW (TU3JP)	11/02 → 10/06		04
RENAULT						
19 II	1.4	59	E7J 706	10/94 → 11/95		04
CLIO I	1.4	57	E6J 713	05/90 → 02/98		04
		57	E6J 760	05/90 → 02/98		04
		57	E6J 712	05/90 → 02/98		04
	1.6 16V	79	K4M 740	04/02 →	→ 09/08	04
CLIO II	1.4 16V (B/CB0P)	72	K4J 711	08/00 →		04
		72	K4J 710	08/00 →		04
		72	K4J 713	08/00 →		04
		72	K4J 712	08/00 →		04
CLIO III	1.4 16V	72	K4J 780	06/05 →		04
	1.6 16V (BR05, BR0B, BR0Y, BR15, BR1J, BR1M, BR1Y, CR0B...)	82	K4M 801	06/05 →		04
		82	K4M 800	06/05 →		04
	1.6 16V (BR09, BR0T, CR09, CR0T)	65	K4M 804	06/05 →	→ 04/09	04

MAGNETI MARELLI

CT6KMR

		kW				QTY
RENAULT						
CLIO Grandtour	1.4 16V	72	K4J 780	02/10 →		04
	1.6 16V (KR0B)	82	K4M 800	02/08 →		04
		82	K4M 801	02/08 →		04
CLIO Sportour	1.4 16V	72	K4J 780	02/10 →		04
	1.6 16V (KR0B)	82	K4M 800	02/08 →		04
		82	K4M 801	02/08 →		04
ESPACE III	2.0	102	F4R 701	09/01 → 10/02		04
		102	F4R 700	09/01 → 10/02		04
	2.0 16V (JE0N, JE0L, JE02)	103	F4R 701	10/98 → 10/02		04
		103	F4R 700	10/98 → 10/02		04
EXPRESS	1.4	59	E7J 773	05/95 → 08/97		04
EXTRA	1.4	59	E7J 773	05/95 → 08/97		04
FLUENCE	1.6 16V (L301, L30F, L30P, L30R)	81	K4M 839	02/10 →		04
		81	K4M 838	02/10 →		04
GRAN TOUR III	1.6 16V (KZ0H)	74	K4M 848	05/09 →		04
	1.6 16V (KZ0U, KZ1B, KZ1U)	81	K4M 858	05/09 →		04
GRAND SCÉNIC II	1.6	83	K4M 782	04/04 →	→ 07/08	04
		83	K4M 761	04/04 →	→ 07/08	04
	2.0	99	F4R 771	04/04 →	→ 04/09	04
		99	F4R 770	04/04 →	→ 04/09	04
		120	F4R 776	04/04 →	→ 07/08	04
GRAND SCÉNIC III	1.6 16V (JZ0U)	81	K4M 858	02/09 →		04
KANGOO	1.4 (FC0C, FC0B, FC0H, FC0M)	55	E7J 634	08/97 →		04
		55	E7J 635	08/97 →		04
		55	E7J 780	08/97 →		04
		55	K7J 701	08/97 →		04
	1.6	64	K7M 750	02/08 →		04
	1.6 16V	78	K4M 830	02/08 →		04
		70	K4M 750	06/01 →		04
		70	K4M 706	06/01 →		04
		70	K4M 752	06/01 →		04
		70	K4M 753	06/01 →		04
	1.6 16V 4x4 (FC0L, FC0P, FC0S)	70	K4M 750	10/01 →		04
		70	K4M 752	10/01 →		04
		70	K4M 753	10/01 →		04
	1.6 16V 4x4 (KC0P, KC0S, KC0L)	70	K4M 750	10/01 →		04
		70	K4M 752	10/01 →		04
		70	K4M 753	10/01 →		04
	1.6 16V bivalent	60	K4M 850	06/05 →	→ 12/07	04
KANGOO / GRAND KANGOO	1.6 (KW00, KW0Y)	64	K7M 750	02/08 →		04
	1.6 16V Hi-Flex	78	K4M 834	02/08 →		04
		78	K4M 850	02/08 →		04
	1.6 16V (KW0D)	78	K4M 830	02/08 →		04
		78	K4M 831	02/08 →		04

CT6KMR

		kW				QTY
RENAULT						
KANGOO BE BOP	1.6 (KW0D)	78	K4M 830	02/09 →		04
LAGUNA I	2.0 (556A)	102	F4R 780	09/99 → 02/01		04
	2.0 16V (556A/B)	103	F4R 780	09/99 → 03/01		04
	2.0 16V (A56A/B)	103	F4R 780	09/99 → 03/01		04
	2.0 RXE (556A)	102	F4R 780	09/99 → 02/01		04
LAGUNA II	1.6 16V (BG0A, BG0L)	79	K4M 710	03/01 →	→ 09/07	04
		79	K4M 714	03/01 →	→ 09/07	04
	1.6 16V (BG1G, BG1H)	82	K4M 716	02/05 →	→ 09/07	04
	1.6 FlexFuel	76	K4M 718	06/01 → 10/03		04
	1.8 16V (BG04, BG0B, BG0C, BG0V)	86	F4P 774	03/01 →	→ 02/05	04
		86	F4P 770	03/01 →	→ 02/05	04
	1.8 16V (BG06, BG0J, BG0M)	85	F4P 773	03/01 →	→ 09/07	04
		85	F4P 771	03/01 →	→ 09/07	04
		85	F4P 775	03/01 →	→ 09/07	04
		85	F4P 774	03/01 →	→ 09/07	04
		85	F4P 770	03/01 →	→ 09/07	04
	1.8 16V (BG0B, BG0C, BG0J, BG0M, BG0V)	89	F4P 772	03/01 →	→ 09/07	04
		89	F4P 770	03/01 →	→ 09/07	04
	1.8 16V (BG0B, BG0M)	88	F4P 773	03/01 →	→ 09/07	04
		88	F4P 770	03/01 →	→ 09/07	04
	1.8 16V (KG0J)	85	F4P 775	03/01 →	→ 09/07	04
		85	F4P 771	03/01 →	→ 09/07	04
		85	F4P 774	03/01 →	→ 09/07	04
	2.0 16V	125	F4R 787	01/05 →	→ 09/07	04
		98	F4R 714	08/02 →	→ 09/07	04
		125	F4R 784	01/05 →	→ 09/07	04
		125	F4R 786	01/05 →	→ 09/07	04
	2.0 16V (BG00, BG0K, BG0P, BG0W)	99	F4R 712	08/02 →		04
		99	F4R 713	08/02 →		04
		99	F4R 714	08/02 →		04
		99	F4R 715	08/02 →		04
	2.0 16V (KG00, KG0K, KG0W)	99	F4R 715	08/02 →	→ 09/07	04
		99	F4R 712	08/02 →	→ 09/07	04
		99	F4R 713	08/02 →	→ 09/07	04
	2.0 16V (KG00, KG0K, KG0W)	99	F4R 714	08/02 →	→ 09/07	04
LAGUNA III	1.6 16V (KT0D)	81	K4M 824	10/07 →		04
	1.6 16V (BT04, BT0D, BT0U)	81	K4M 824	10/07 →		04
MEGANE CC	1.6 16V (EZ0U, EZ1U)	81	K4M 858	06/10 →		04

MAGNETI MARELLI

CT6KMR

		kW				QTY
RENAULT						
MEGANE I	1.4 16V (DA0D, DA1H, DA0W, DA10)	70	K4J 750	03/99 → 08/03		04
		70	K4J 714	03/99 → 08/03		04
	1.4 16V (EA0D, EA1H, EA0W, EA10)	70	K4J 750	03/99 → 08/03		04
		70	K4J 714	03/99 → 08/03		04
	1.4 16V (KA0D, KA1H, KA0W, KA10)	70	K4J 750	03/99 → 08/03		04
		70	K4J 714	03/99 → 08/03		04
	1.4 16V (LA0D, LA1H, IA0W, LA10)	70	K4J 714	03/99 → 08/03		04
		70	K4J 750	03/99 → 08/03		04
	1.4 e (KA0V)	55	E7J 626	03/99 → 08/03	→ 10/00	04
	1.6 16V (DA0B, DA04, DA11)	79	K4M 700	03/99 → 08/03		04
		79	K4M 708	03/99 → 08/03		04
		79	K4M 701	03/99 → 08/03		04
	1.6 16V (EA0B, EA04, EA11)	79	K4M 700	03/99 → 08/03		04
		79	K4M 708	03/99 → 08/03		04
		79	K4M 701	03/99 → 08/03		04
	1.6 16V (KA0B, KA04, KA11)	79	K4M 700	03/99 → 08/03		04
		79	K4M 708	03/99 → 08/03		04
		79	K4M 704	03/99 → 08/03		04
		79	K4M 701	03/99 → 08/03		04
	1.6 16V (La04, LA11, LA0B, LA1C, LA1J)	79	K4M 700	03/99 → 08/03		04
		79	K4M 708	03/99 → 08/03		04
		79	K4M 701	03/99 → 08/03		04
	1.6 e (KA0F)	66	K7M 703	03/99 → 08/03		04
		66	K7M 702	03/99 → 08/03		04
	1.8 16V (BA06, BA12, BA1A, BA1M, BA1R)	85	F4P 722	01/01 → 08/03		04
		85	F4P 720	01/01 → 08/03		04
	1.8 16V (KA0S, KA12, KA1A, KA1M, KA1R)	85	F4P 722	01/01 → 08/03		04
		85	F4P 720	01/01 → 08/03		04
	1.8 16V (LA06, LA12, LA1A, LA1M, LA1R)	85	F4P 722	01/01 → 08/03		04
		85	F4P 720	01/01 → 08/03		04
	2.0 16V	102	F4R 746	01/02 → 08/03		04
		102	F4R 770	01/02 → 08/03		04
	2.0 i (LA0G)	80	F3R 798	03/99 → 08/03		04
		80	F3R 791	03/99 → 08/03		04
		80	F3R 752	03/99 → 08/03		04
		80	F3R 797	03/99 → 08/03		04
		80	F3R 796	03/99 → 08/03		04

CT6KMR

		kW				QTY
RENAULT						
MEGANE II	1.4	60	K4J 732	09/03 →	→ 12/05	04
		72	K4J 730	08/03 → 07/09	→ 10/08	04
		72	K4J 740	08/03 → 07/09	→ 10/08	04
	1.4 16V	60	K4J 732	10/03 → 02/08	→ 12/05	04
	1.4 16V (BM0B, CM0B)	72	K4J 730	11/02 → 02/08		04
		72	K4J 740	11/02 → 02/08		04
	1.6	77	K4M 762	05/05 →		04
		83	K4M 760	09/03 → 03/09	→ 09/06	04
		83	K4M 761	09/03 → 03/09	→ 09/06	04
		77	K4M 788	06/05 → 02/08		04
	1.6 16V	82	K4M 761	01/06 → 06/08		04
		82	K4M 812	01/06 → 06/08		04
		82	K4M 760	01/06 → 06/08		04
		82	K4M 813	01/06 → 06/08		04
	1.6 16V Hi-Flex	77	K4M 856	02/08 → 07/09		04
	1.6 16V (BM0C, CM0C)	83	K4M 760	11/02 → 02/08		04
	2.0	99	F4R 770	09/03 → 12/09	→ 07/09	04
		99	F4R 771	09/03 → 12/09	→ 07/09	04
	2.0 16V (BM0U, CM0U)	99	F4R 770	11/02 → 02/08		04
	2.0 Dynamique	99	F4R 770	09/03 → 12/09	→ 07/09	04
		99	F4R 771	09/03 → 12/09	→ 07/09	04
MEGANE III	1.6 16V (BZ0H)	74	K4M 848	11/08 →		04
	1.6 16V (BZ1B, BZ1H)	81	K4M 858	11/08 →		04
	1.6 16V (DZ0H)	74	K4M 848	11/08 →		04
	1.6 16V (DZ0U, DZ1B, DZ1H)	81	K4M 858	11/08 →		04
	1.6 16V (KZ0H)	74	K4M 848	05/09 →		04
	1.6 16V (KZ0U, KZ1B, KZ1U)	81	K4M 858	05/09 →		04
MODUS / GRAND MODUS	1.4 (JP01, JP0J)	72	K4J 780	12/04 →		04
		72	K4J 770	12/04 →		04
	1.6 (JP03, JP0B, JP0U, JP0Y, JP1G)	82	K4M 791	12/04 →		04
		82	K4M 801	12/04 →		04
		82	K4M 800	12/04 →		04
		82	K4M 790	12/04 →		04
	1.6 (JP0L, JP0V)	65	K4M 794	12/04 →	→ 12/07	04
RAPID Furgonato	1.4	59	E7J 773	05/95 → 08/97		04
SAFRANE II	2.5 20V (B54F)	121	N7U 701	07/96 → 12/00		05
		121	N7U 700	07/96 → 12/00		05

MAGNETI MARELLI

CT6KMR

		kW				QTY
RENAULT						
SCÉNIC I	1.6	75	K4M 708	03/01 → 08/03		04
		75	K4M 709	03/01 → 08/03		04
		79	K4M 706	09/99 → 09/03		04
		79	K4M 700	09/99 → 09/03		04
	1.6 RT 16V	79	K4M 706	09/99 → 09/03		04
		79	K4M 700	09/99 → 09/03		04
	1.8 16V (JA12, JA1R, JA1M, JA1A)	85	F4P 722	01/01 → 08/03		04
		85	F4P 720	01/01 → 08/03		04
	1.8 4x4	85	F4P 722	07/00 → 04/01		04
	2.0 16V	103	F4R 744	09/99 → 08/03		04
		103	F4R 741	09/99 → 08/03		04
		103	F4R 747	09/99 → 08/03		04
		103	F4R 740	09/99 → 08/03		04
	2.0 16V (JA1B, JA1D)	102	F4R 746	07/00 → 08/03		04
		102	F4R 741	07/00 → 08/03		04
		102	F4R 740	07/00 → 08/03		04
	2.0 16V RX4	102	F4R 746	06/00 → 08/03		04
		102	F4R 744	06/00 → 08/03		04
SCÉNIC II	1.4 (JM0B, JM0H, JM1A)	72	K4J 770	06/03 →	→ 09/06	04
		72	K4J 740	06/03 →	→ 09/06	04
		72	K4J 730	06/03 →	→ 09/06	04
	1.6	77	K4M 788	06/06 →	→ 07/06	04
	1.6 (JM0C, JM0J, JM1B)	83	K4M 782	06/03 →	→ 12/05	04
		83	K4M 761	06/03 →	→ 12/05	04
	1.6 16V (JM1R)	82	K4M 812	10/05 →	→ 07/08	04
		82	K4M 766	10/05 →	→ 07/08	04
		82	K4M 706	10/05 →	→ 07/08	04
		82	K4M 813	10/05 →	→ 07/08	04
	2.0 (JM05, JM0U, JM1N, JM1U, JM2V)	99	F4R 770	06/03 →	→ 09/06	04
		99	F4R 771	06/03 →	→ 09/06	04
	2.0 16V Turbo (JM0W)	120	F4R 776	05/04 →	→ 07/08	04
SCÉNIC III	1.6 16V (JZ0U)	81	K4M 858	02/09 →		04
		81	K4M R 858	02/09 →		04
	1.6 E85 (JZ03)	81	K4M 866	02/09 →		04
SYMBOL I	1.6 16V	79	K4M 740	04/02 →	→ 09/08	04
SYMBOL II	1.6 16V	77	K4M 743	09/08 →		04
THALIA I	1.6 16V	79	K4M 740	04/02 →	→ 09/08	04
THALIA II	1.6 16V	77	K4M 743	09/08 →		04

CT6KMR

		kW				QTY
ROVER						
100 / METRO	114 GTI 16V	69	14 K4C	03/90 → 08/91		04
		69	14 K4D	03/90 → 08/91		04
		76	14 K4F	08/91 → 12/98	→ 01/95	04
	114 GTI/GT 16V Cat	66	14 K4C	03/90 → 12/98	→ 12/92	04
		66	14 K4D	03/90 → 12/98	→ 12/92	04
	114 S/L/GTA	55	14 K2A	03/90 → 12/98		04
		55	14 K2D	03/90 → 12/98		04
200	214	55	14 K2D	09/93 → 10/95		04
		55	14 K2A	09/93 → 10/95		04
	216	90	D 16 A8	10/92 → 06/99	→ 03/96	04
	214 1.4	70	14 K4C	04/90 → 09/92	04/92 →	04
	214 1.4i 16V	76	14 K4F	01/93 → 11/99	→ 03/96	04
	214 GSi/Si	70	14 K4C	01/90 → 10/95	→ 09/92	04
		76	14 K4F	12/92 → 10/95		04
	214 i	55	14 K2F	11/95 → 03/00	→ 03/96	04
	214 Si	76	14 K4F	11/95 → 03/00	→ 03/96	04
	214 Si/Gsi	66	14 K4C	10/89 → 10/95	→ 09/92	04
		66	14 K4D	10/89 → 10/95	→ 09/92	04
	216 1.6i	90	D 16 A8	01/92 → 11/99	→ 03/96	04
	216 1.6i 16V	82	16 K4F	01/96 → 11/99		04
	216 GSi	82	D 16 Z2	10/89 → 10/95		04
		85	D 16 A7	10/89 → 10/95		04
	216 GTi	90	D 16 A8	09/90 → 10/95		04
		96	D 16 A9	09/90 → 10/95	→ 11/93	04
	220 GSi	100	20 T4H	05/94 → 06/99	→ 03/96	04
	220 GTi	100	20 T4H	01/93 → 10/95		04
		103	20 M4F	09/91 → 10/95	→ 09/92	04
	220 Turbo	147	20 T4G	01/93 → 10/95		04
		147	20 T4G	10/92 → 06/99	→ 03/96	04
400	1.6 i	82	D 16 Z2	05/94 → 11/98	→ 04/95	04
	2.0 i	100	20 T4H	05/94 → 11/98	→ 04/95	04
	414	70	14 K4C	01/93 → 04/95		04
	414 GSI/SI	66	14 K4C	04/90 → 04/95	→ 09/92	04
		66	14 K4D	04/90 → 04/95	→ 09/92	04
	414 GSI/SI Cat	76	14 K4F	01/93 → 04/95		04
	416 GSI	82	D 16 Z2	04/90 → 04/95		04
	416 GSI/GSE	85	D 16 A7	04/90 → 04/95		04
	416 GTI	90	D 16 A8	04/90 → 04/95	→ 09/92	04
	416 GTI/GTE	96	D 16 A9	04/90 → 04/95	→ 09/92	04
	420 GSI/SLI/GTI/Vite	100	20 T4H	01/93 → 04/95		04
	420 GTI/GSI/Vitesse	103	20 M4F	02/92 → 04/95	→ 09/92	04
	420 Turbo	147	20 T4G	01/93 → 04/95		04

MAGNETI MARELLI

CT6KMR

		kW				QTY
ROVER						
800	2.5	129	25 K4F	02/96 → 10/98		06
	2.5 Si	129	25 K4F	02/96 → 10/98		06
	820 16V Turbo (RS)	132	T 16	01/92 → 02/99		04
	820 I/SI (RS)	100	20 T4H	01/92 → 02/99		04
	820 i/Si (XS)	103	20 HD	10/88 → 12/91		04
	820 Sport	145	20 T4G	04/94 → 03/96		04
	825 Si (RS)	129	25 K4F	04/96 → 02/99		06
	825 Si Lux (RS)	129	25 K4F	04/96 → 02/99		06
	825 SI/Sterling (XS)	127	C 25 A2	01/87 → 12/91	→ 02/88	06
		130	C 27 A2	02/88 → 12/91		06
	827 SI/Sterling Catalytic-Conv (XS)	124	C 27 A1	02/88 → 02/99	→ 09/91	06
	827 Vitesse Catalytic-Conv (XS)	124	C 27 A1	10/88 → 12/91		06
	827 Vitesse/SLI	130	C 27 A2	10/88 → 12/91		06
COUPE	1.6 16 V	82	16 K4F	03/96 → 11/99		04
MAESTRO	1.6	63	16 H	09/90 → 01/95	→ 04/92	04
SEAT						
ALTEA	2.0 FSI	110	BVZ	05/04 → 03/09		04
		110	BVY	05/04 → 03/09		04
		110	BLY	05/04 → 03/09		04
		110	BLR	05/04 → 03/09		04
ALTEA XL	2.0 FSI	110	BVY	10/06 → 03/09		04
		110	BVZ	10/06 → 03/09		04
LEON (1P1)	2.0 FSI	110	BVY	07/05 → 05/10		04
		110	BLY	07/05 → 05/10		04
		110	BLR	07/05 → 05/10		04
		110	BVZ	07/05 → 05/10		04
TOLEDO III	2.0 FSI	110	BLY	10/04 → 05/09		04
		110	BLR	10/04 → 05/09		04
		110	BVY	10/04 → 05/09		04
		110	BVZ	10/04 → 05/09		04
SKODA						
FAVORIT (781)	1.3 (781)	50	136B	01/94 → 09/94		04
FAVORIT Forman (785)	1.3	50	136B	01/94 → 06/95		04
FAVORIT Pick-up (787)	1.3	50	136B	12/92 → 06/97		04
FELICIA	1.3	50	AMH	10/94 → 03/98		04
		50	136B	10/94 → 03/98		04
	1.3 LXI	50	AMH	08/95 → 03/98		04
FORMAN	1.3	50	136B	01/94 → 06/95		04
LAURA	2.0 FSI	110	BLY	11/04 → 10/08		04
		110	BLR	11/04 → 10/08		04
		110	BVZ	11/04 → 10/08		04
		110	BVY	11/04 → 10/08		04

CT6KMR

		kW				QTY
SKODA						
OCTAVIA	2.0 FSI	110	BLR	11/04 → 10/08		04
		110	BLY	11/04 → 10/08		04
		110	BVZ	11/04 → 10/08		04
		110	BVY	11/04 → 10/08		04
SUZUKI						
ALTO	1.0	43	G10BB	01/00 → 06/02		04
	1.6	71	G16B	10/98 → 09/00		04
BALENO	1.3 (SY413)	52	G13BA	09/96 → 05/02		04
	1.3 16V (SY413)	63	G13BB	03/97 → 05/02		04
	1.3 i 16V (SY413)	63	G13BB	07/95 → 05/02		04
	1.6 GS 16V (SY416)	73	G16B	08/96 → 05/02		04
	1.6 i 16V (SY416)	73	G16B	08/96 → 05/02		04
		72	G16B	07/95 → 05/02		04
	1.6 i 16V 4x4 (SY416)	73	G16B	08/96 → 05/02		04
		72	G16B	07/95 → 05/02		04
CARRY	1.3 16 V	58	G13BB	03/00 →	→ 01/04	04
	1.3 4x4	56	G13BB	02/99 → 09/04		04
JIMNY	1.3 16V (SN413)	59	G13BB	09/98 →		04
	1.3 16V 4WD (SN413)	59	G13BB	09/98 →		04
JIMNY SIERRA	1.3 16V (SN413)	59	G13BB	09/98 →		04
	1.3 16V 4WD (SN413)	59	G13BB	09/98 →		04
VITARA	1.6 (SE 416)	70	G16B	02/91 → 03/98		04
	1.6 i 16V (ET, TA02, SE416)	71	G16B	07/90 → 03/98		04
	1.6 i 16V Trazione integrale (ET, TA02)	71	G16B	07/90 → 03/98		04
	1.6 i JLX (SE 416)	70	G16B	02/91 → 03/98		04
	2.0 16V (SV420)	97	J20A	12/96 → 03/98		04
	2.0 16V Trazione integrale (SV420)	97	J20A	12/96 → 03/98		04
	2.0 V6 24V (SV620)	100	H 20 A	12/94 → 03/98		06
	2.0 V6 24V Trazione integrale (SV620)	100	H 20 A	12/94 → 03/98		06
	2.5 V6 24V Trazione integrale (FT)	118	H 25 A	12/95 → 03/98		06
	V6 24V (SV620)	100	H 20 A	12/94 → 03/98		06
X-90	1.6 i 16V (SZ 416)	71	G16B	09/95 →		04
	1.6 i 16V 4x4	71	G16B	09/95 → 12/97		04
VAUXHALL						
ASTRA Mk II	2.0 GTE 16V	115	20 XE	05/88 → 08/91		04

MAGNETI MARELLI

CT6KMR

		kW				QTY
VOLKSWAGEN						
BORA III	2.0 FSI	110	BVZ	08/05 → 10/10		04
		110	BLX	08/05 → 10/10		04
		110	BLY	08/05 → 10/10		04
		110	BLR	08/05 → 10/10		04
		110	BVY	08/05 → 10/10		04
EOS	1.6 FSI	85	BLF	06/06 → 05/08		04
	2.0 FSI	110	BVZ	03/06 → 05/08		04
		110	BVY	03/06 → 05/08		04
GOLF PLUS	2.0 FSI	110	BVZ	05/05 → 06/08		04
		110	BVY	05/05 → 06/08		04
		110	BLY	05/05 → 06/08		04
		110	BLR	05/05 → 06/08		04
GOLF V	2.0 FSI	110	AXW	01/04 → 11/08		04
		110	BVZ	01/04 → 11/08		04
		110	BVY	01/04 → 11/08		04
		110	BVX	01/04 → 11/08		04
		110	BLY	01/04 → 11/08		04
		110	BLX	01/04 → 11/08		04
		110	BLR	01/04 → 11/08		04
	2.0 GTI	169	BYD	09/06 → 12/08		04
JETTA I	2.0 FSI	110	BLR	08/05 → 10/10		04
		110	BVZ	08/05 → 10/10		04
		110	BLY	08/05 → 10/10		04
		110	BLX	08/05 → 10/10		04
		110	BVY	08/05 → 10/10		04
JETTA III (1K2)	2.0 FSI	110	BLY	08/05 → 10/10		04
		110	BLR	08/05 → 10/10		04
		110	BLX	08/05 → 10/10		04
		110	BVY	08/05 → 10/10		04
		110	BVZ	08/05 → 10/10		04
JETTA V	2.0 FSI	110	BLR	08/05 → 10/10		04
		110	BLX	08/05 → 10/10		04
		110	BVY	08/05 → 10/10		04
		110	BVZ	08/05 → 10/10		04
		110	BLY	08/05 → 10/10		04
PASSAT (3C2)	2.0 FSI	110	BVZ	03/05 → 07/10	→ 05/07	04
		110	BVY	03/05 → 07/10	→ 05/07	04
		110	BLY	03/05 → 07/10	→ 05/07	04
		110	BLR	03/05 → 07/10	→ 05/07	04
	2.0 FSI 4motion	110	BVX	09/05 → 07/10	→ 11/05	04
		110	BLY	09/05 → 07/10	→ 11/05	04
		110	BLX	09/05 → 07/10	→ 11/05	04
	2.0 FSI Confortline	110	BVZ	03/05 → 07/10	→ 05/07	04
		110	BVY	03/05 → 07/10	→ 05/07	04
		110	BLY	03/05 → 07/10	→ 05/07	04
		110	BLR	03/05 → 07/10	→ 05/07	04

CT6KMR

		kW				QTY
VOLKSWAGEN						
TOURAN	2.0 FSI	110	BVZ	10/03 → 11/05		04
		110	BVY	10/03 → 11/05		04
		110	BLR	10/03 → 11/05		04
		110	AXW	10/03 → 11/05		04
		110	BLY	10/03 → 11/05		04
		110	BLX	10/03 → 11/05		04
VENTO III	2.0 FSI	110	BVY	08/05 → 10/10		04
		110	BVZ	08/05 → 10/10		04
		110	BLY	08/05 → 10/10		04
		110	BLR	08/05 → 10/10		04
		110	BLX	08/05 → 10/10		04
VOLVO						
850	2.0	105	B 5204 F	06/91 → 12/96		05
S90	2.9	132	B 6304 S2	01/97 → 05/98		06
		150	B 6304 G	01/97 → 05/98		06
V90 Station wagon	2.9	132	B 6304 S2	01/97 → 12/98		06
		150	B 6304 G	01/97 → 12/98		06

CT6KMR11

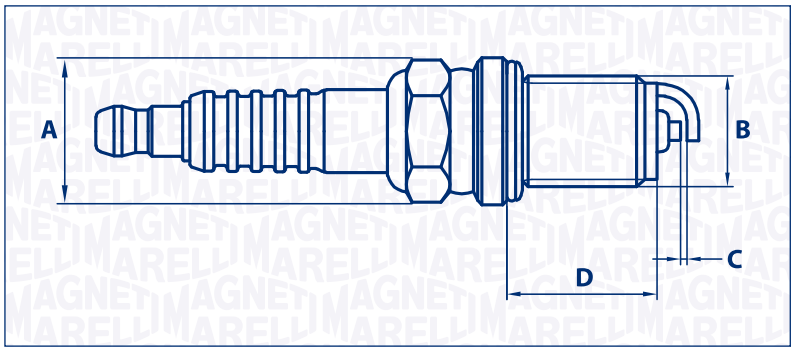

A	Hexagon Size	16
B	Thread Size	M14×1.25
C	Gap (mm)	1.1
D	Thread Reach	19.0
	Heat Range	6
	Type	Resistor
	Version	1 Mass Electrode
	Seat	Flat
	Core	Copper

BERU

0002335708 14FR7DUX Z16

BOSCH

11 0 242 235 667 0 242 240 539 0 242 240 638
FR 6 DCX FR 7 DCX

CHAMPION

C9YC4 OE081/T10 OE152/T10 RC8YC4
RC8YCC4 RC9YC4 RC9YCC4 RC9YCN4

DENSO

K20PR-U11

NGK

2756 4293 5553 6465
7340 90888 BK6E11 BKR6E-11
BKR6ES11 BKR6ESZ10 BKR6EZB VL14
V-Line 14

MAGNETI MARELLI

CT6KMR11

		kW				QTY
CHEVROLET						
AVEO 2	1.4	69	L14	03/06 → 12/07		04
		69	F14D3	03/06 → 12/07		04
	1.6	76	F16D3	05/05 →	→ 04/09	04
		76	LXV	05/05 →	→ 04/09	04
		77	A16DMS	09/03 →	→ 04/09	04
		77	LXT	09/03 →	→ 04/09	04
CRUZE	1.3	61	M13A	07/00 → 09/08		04
	1.3 AWD	61	M13A	07/00 → 09/08		04
	1.6	80	F16D3	05/09 →		04
		80	LXV	05/09 →		04
		80	LXT	05/09 →		04
ESTATE	1.6	80	F16D3	03/05 →		04
KALOS	1.4 16V	69	F14D3	03/05 →		04
LACETTI	1.4	70	F14D3	03/05 →		04
	1.4 16V	70	F14D3	03/05 →		04
	1.6	80	F16D3	03/05 →	→ 04/09	04
LANOS	1.6 16V	78	A16DMS	11/05 →		04
LOVA	1.4	69	L14	03/06 → 12/07		04
		69	F14D3	03/06 → 12/07		04
	1.6	76	LXV	05/05 →	→ 04/09	04
		76	F16D3	05/05 →	→ 04/09	04
NUBIRA	1.6	80	F16D3	03/05 →		04
	1.4	69	F14D3	01/05 →		04
OPTRA	1.4	69	F14D3	01/05 →		04
	1.6	78	LXT	08/03 → 12/08		04
		80	F16D3	08/03 → 12/08		04
		80	F16D3	03/05 →		04
REZZO	1.6	77	A16DMS	03/05 →	→ 06/08	04
		79	A16DMS	08/05 →	→ 06/08	04
TACUMA	1.6	77	A16DMS	03/05 →	→ 06/08	04
		79	A16DMS	08/05 →	→ 06/08	04
DAEWOO						
CIELO	1.5	66	V15L	06/94 → 07/98		04
	1.5 16V	66	A15MF	02/95 → 08/97		04
ESPERO	1.5 16V	65	A15MF	10/93 → 09/94		04
GENTRA	1.4	69	F14D3	05/05 →		04
	1.4 SR	69	F14D3	05/03 → 04/05		04
	1.6 E-Tec LS	77	F16D3	05/05 →		04
KALOS	1.4	69	F14D3	05/03 → 12/04		04
	1.4 16V	69	F14D3	04/03 →		04
LACETTI	1.5 SE	81	A15DMS	04/98 → 05/99		04
	1.6	80	F16D3	02/04 →		04
LANOS	1.6 16V	78	A16DMS	05/97 →	→ 07/05	04
NEXIA	1.5 16V	66	A15MF	02/95 → 08/97		04
	1.6	80	F16D3	07/08 →		04

CT6KMR11

		kW				QTY
DAEWOO						
NUBIRA	1.5 SE	81	A15DMS	06/99 → 07/03		04
	1.6	76	A16DMS	08/02 → 07/03		04
		80	F16D3	07/03 →		04
	1.6 16V	66	A16SMS	06/97 →		04
		76	A16DMS	12/00 →		04
		78	A16DMS	05/97 →		04
ORION	1.6	76	A16DMS	08/02 → 07/03		04
	1.6 16V	66	A16SMS	06/97 →		04
		76	A16DMS	12/00 →		04
		78	A16DMS	05/97 →		04
REZZO	1.6	77	A16DMS	09/00 →		04
TACUMA	1.6	77	A16DMS	09/00 →		04
DAIHATSU						
APPLAUSE	1.6 16V (A101)	66	HD	06/89 → 07/97	→ 06/92	04
CHARADE III	1.3	66	HCE	11/90 → 02/93		04
CHARADE IV	1.3 16V	55	HCE	05/96 → 11/99		04
	1.5 16V	55	HEE	10/94 →		04
	1.5 HG	55	HEE	06/94 → 03/96		04
		55	HEEG	06/94 → 03/96		04
	1.5 i 16V	66	HEE	01/97 → 11/99		04
		66	HEEG	01/97 → 11/99		04
FEROZA Hard Top	1.6 16V 4WD	63	HDC	10/88 → 12/99	→ 12/97	04
	1.6 SX 16V 4WD	63	HDC	10/88 → 12/99	→ 12/97	04
	1.6 i 16V 4x4	70	HD-E	10/88 → 12/99	→ 12/97	04
FEROZA Soft Top	1.6 16V	63	HDC	10/88 → 12/99	→ 12/97	04
	1.6 i 16V	70	HD-E	10/88 → 12/99	→ 12/97	04
GRAN MOVE	1.5 16V (G303)	66	HEEG	10/96 → 07/98		04
	1.6 16V (G301)	67	HDEP	05/98 →	→ 07/02	04
HIJET Pick-up	1.3	48	HCE	06/98 →		04
		52	HCE	06/98 →		04
PYZAR	1.5 16V (G303)	66	HEEG	10/96 → 07/98		04
	1.6 16V (G301)	67	HDEP	05/98 →	→ 07/02	04
SPORTRAK	1.6 16V	63	HDC	10/88 → 12/99	→ 12/97	04
	1.6 16V 4WD	63	HDC	10/88 → 12/99	→ 12/97	04
	1.6 i 16V	70	HD-E	10/88 → 12/99	→ 12/97	04
	1.6 i 16V 4x4	70	HD-E	10/88 → 12/99	→ 12/97	04
	1.6 SX 16V 4WD	63	HDC	10/88 → 12/99	→ 12/97	04
VALERA IV	1.5 16V	55	HEE	10/94 →		04
	1.5 i 16V	66	HEE	08/94 →		04
FORD						
ESCORT VII	RS 2000	110	N7A	02/95 → 02/98		04

MAGNETI MARELLI

CT6KMR11

		kW				QTY
GREAT WALL						
HAVAL 5	2.4	93	4G69S4N	01/13 →		04
		100	4G69S4N	06/10 →		04
	2.4 4WD	93	4G69S4N	01/13 →		04
	2.4 Trazione integrale	100	4G69S4N	06/10 →		04
	X240 (CC6461)	100	4G69S4N	06/10 →		04
HOVER H5	2.4	93	4G69S4N	01/13 →		04
		100	4G69S4N	06/10 →		04
	2.4 4WD	93	4G69S4N	01/13 →		04
	2.4 Trazione integrale	100	4G69S4N	06/10 →		04
	X240 (CC6461)	100	4G69S4N	06/10 →		04
X-SERIES	2.4	93	4G69S4N	01/13 →		04
		100	4G69S4N	06/10 →		04
	2.4 4WD	93	4G69S4N	01/13 →		04
	2.4 Trazione integrale	100	4G69S4N	06/10 →		04
	X240 (CC6461)	100	4G69S4N	06/10 →		04
HONDA						
BALLADE IV	1.3 16V Cat (EC8)	55	D13B2	09/89 → 09/91		04
	1.5 i 16V	66	D15B2	10/88 → 09/91		04
	1.5 i 16V (ED6)	69	D15B2	10/88 → 09/91		04
BALLADE V	1.3	55	D13B2	01/92 → 12/92		04
	1.6 4x4	92	D16Z7	01/92 → 10/95		04
CITY	1.3	60	L13A3	10/05 →		04
	1.3 (GD6)	63	L13A1	05/03 →		04
	1.3 4WD	63	L13A1	11/02 → 10/04		04
	1.3 SES	63	L13A1	05/03 → 09/05		04
CIVIC III	1.3 16V Cat (EC8)	55	D13B2	09/89 → 09/91		04
	1.5 i 16V	66	D15B2	10/88 → 09/91		04
	1.5 i 16V (ED6)	69	D15B2	10/88 → 09/91		04
CIVIC IV	1.3	55	D13B2	01/92 → 12/92		04
	1.3 16V (EG3)	55	D13B2	10/91 → 11/95		04
	1.4 i (MA8, MB2)	55	D14A7	09/95 → 02/01	→ 06/96	04
		55	D14A5	09/95 → 02/01	→ 06/96	04
		55	D14Z3	09/95 → 02/01	→ 06/96	04
		66	D14A8	09/94 → 02/01		04
		66	D14Z4	09/94 → 02/01		04
		66	D14A2	09/94 → 02/01		04
		66	D14A6	09/94 → 02/01		04
	1.5 i 16V	66	D15B2	10/88 → 09/91		04
	1.5 i 16V (ED6)	69	D15B2	10/88 → 09/91		04
	1.6 4x4	92	D16Z7	01/92 → 10/95		04
	1.6 i Vtec (EJ1)	92	D16Z9	01/94 → 03/96		04
		92	D16Y6	01/94 → 03/96		04

CT6KMR11

		kW				QTY
HONDA						
CIVIC V	1.3	55	D13B2	01/92 → 12/92		04
	1.3 16V (EG3)	55	D13B2	10/91 → 11/95		04
	1.4 i (EJ9)	55	D14Z1	11/95 → 02/01		04
		55	D14A3	11/95 → 02/01		04
	1.6 4x4	92	D16Z7	01/92 → 10/95		04
	1.6 i Vtec (EJ1)	92	D16Y6	01/94 → 03/96		04
		92	D16Z9	01/94 → 03/96		04
CIVIC VI	1.4 i (EJ9)	55	D14A3	11/95 → 02/01		04
		55	D14Z1	11/95 → 02/01		04
	1.4 i (MA8, MB2)	55	D14A5	09/95 → 02/01	→ 06/96	04
		66	D14A6	09/94 → 02/01		04
		66	D14A2	09/94 → 02/01		04
		66	D14Z4	09/94 → 02/01		04
		55	D14Z3	09/95 → 02/01	→ 06/96	04
		55	D14A7	09/95 → 02/01	→ 06/96	04
		66	D14A8	09/94 → 02/01		04
JAZZ	1.3 (GD6)	63	L13A1	05/03 →		04
JAZZ II	1.2 (GD5)	57	L12A1	03/02 → 07/08		04
	1.3 (GD1)	61	L13A1	03/02 → 07/08		04
	1.3 iDSi	63	L13A1	03/02 → 09/07		04
HYUNDAI						
EXCEL I	1.5 i 16V	73	G4ER	12/95 → 01/00		04
LANTRA II	1.5 12V	65	G4EK	04/97 → 10/00		04
ISUZU						
BIGHORN II	3.2	130	6VD1	08/91 → 07/98	01/98 →	06
GEMINI	1.6 GTI 16V	84	4XE1	08/88 → 12/90		04
TROOPER II	3.2	130	6VD1	08/91 → 07/98	01/98 →	06
KIA						
CARENS II	1.6	77	GA6D	07/02 →	→ 05/06	04
CLARUS	2.0 i 16V	98	FE (16V)	07/96 →	→ 07/01	04
CREDOS	2.0 i 16V	98	FE (16V)	07/96 →	→ 07/01	04
RETONA	2.0 16V	94	FE (16V)	05/00 →		04
SPORTAGE	2.0	87	FE (16V)	10/00 → 08/03		04
	2.0 4WD	87	FE (16V)	10/00 → 08/03		04
	2.0 i 16V	94	FE (16V)	10/99 → 08/03		04
	2.0 i 16V 4WD	94	FE (16V)	04/94 → 08/03		04
	2.0 i LX 16V	94	FE (16V)	04/94 → 08/03		04
MAZDA						
323 ASTINA IV	1.6	62	B6E	09/89 → 06/91		04
	1.8 16V	76	BP	08/89 → 07/94		04
	1.8 16V GT	94	BP (DOHC)	08/89 → 07/94		04
	1.8 4WD	76	BPC	01/91 → 04/94		04
323 ASTINA V	2.0 24V	106	KF	08/94 → 09/98		06
323 C IV	1.8 16V 4WD	76	BP	11/91 → 12/93		04

MAGNETI MARELLI

CT6KMR11

		kW				QTY
MAZDA						
323 F IV	1.6	62	B6E	09/89 → 06/91		04
	1.8 16V	76	BP	08/89 → 07/94		04
	1.8 16V GT	94	BP (DOHC)	08/89 → 07/94		04
	1.8 4WD	76	BPC	01/91 → 04/94		04
323 F V	2.0 24V	106	KF	08/94 → 09/98		06
323 IV	1.8 16V GT	94	BP (DOHC)	06/89 → 07/94		04
323 P V	1.3 16V	54	B3 (16V)	10/96 →		04
323 P V	1.5 16V	65	Z5-DE	10/96 →	→ 07/01	04
323 PROTÉGÉ V	1.6	80	B6 (DOHC)	08/94 → 09/98		04
	1.6 Protégé	80	B6 (DOHC)	08/94 → 09/98		04
	1.8	92	BP (DOHC)	07/94 → 09/98		04
	1.8 Protégé	92	BP (DOHC)	07/94 → 09/98		04
323 PROTÉGÉ VI	1.8 Protégé	92	BP (DOHC)	05/98 → 05/04		04
323 S IV	1.8 16V GT	94	BP (DOHC)	06/89 → 07/94		04
323 S V	1.6	80	B6 (DOHC)	08/94 → 09/98		04
	1.6 Protégé	80	B6 (DOHC)	08/94 → 09/98		04
	1.8	92	BP (DOHC)	07/94 → 09/98		04
	1.8 Protégé	92	BP (DOHC)	07/94 → 09/98		04
323 S VI	1.8 Protégé	92	BP (DOHC)	05/98 → 05/04		04
626 IV	2.0 i	85	FS	01/92 → 04/97		04
	2.0 i 4WD	85	FS	04/92 → 04/97		04
ALLEGRO VI	1.8 Protégé	92	BP (DOHC)	05/98 → 05/04		04
ASTINA IV	1.6	62	B6E	09/89 → 06/91		04
	1.8 16V	76	BP	08/89 → 07/94		04
	1.8 16V GT	94	BP (DOHC)	08/89 → 07/94		04
	1.8 4WD	76	BPC	01/91 → 04/94		04
ETUDE IV	1.6	62	B6E	09/89 → 06/91		04
	1.8 16V	76	BP	08/89 → 07/94		04
	1.8 16V 4WD	76	BP	11/91 → 12/93		04
	1.8 16V GT	94	BP (DOHC)	08/89 → 07/94		04
	1.8 4WD	76	BPC	01/91 → 04/94		04
ETUDE V	1.6	80	B6 (DOHC)	08/94 → 09/98		04
	1.6 Protégé	80	B6 (DOHC)	08/94 → 09/98		04
	1.8	92	BP (DOHC)	07/94 → 09/98		04
	1.8 Protégé	92	BP (DOHC)	07/94 → 09/98		04
ETUDE VI	1.8 Protégé	92	BP (DOHC)	05/98 → 05/04		04
FAMILIA / LANTIS V	2.0 24V	106	KF	08/94 → 09/98		06
FAMILIA IV	1.6	62	B6E	09/89 → 06/91		04
	1.8 16V	76	BP	08/89 → 07/94		04
	1.8 16V 4WD	76	BP	11/91 → 12/93		04
	1.8 16V GT	94	BP (DOHC)	08/89 → 07/94		04
	1.8 4WD	76	BPC	01/91 → 04/94		04

CT6KMR11

		kW				QTY
MAZDA						
FAMILIA V	1.3 16V	54	B3 (16V)	10/96 →		04
	1.5 16V	65	Z5-DE	10/96 →	→ 07/01	04
	1.6	80	B6 (DOHC)	08/94 → 09/98		04
	1.6 Protégé	80	B6 (DOHC)	08/94 → 09/98		04
	1.8	92	BP (DOHC)	07/94 → 09/98		04
	1.8 Protégé	92	BP (DOHC)	07/94 → 09/98		04
	2.0 24V	106	KF	08/94 → 09/98		06
FAMILIA VI	1.8 Astina	92	BP (DOHC)	09/98 → 05/04		04
	1.8 Protégé	92	BP (DOHC)	05/98 → 05/04		04
LANTIS V	2.0 24V	106	KF	08/94 → 09/98		06
MIATA I	1.6	66	8AN1	01/95 → 04/98		04
		85	B64F	05/90 → 01/94		04
MIATA II	1.8	103	BPD	01/98 → 07/02		04
		107	BP6J	08/02 → 10/05		04
	1.8 16V	102	BPD	11/00 → 10/05		04
		103	BP-ZE	05/98 → 10/05		04
		107	BPD	11/00 → 10/05		04
		107	BP-ZE	11/00 → 10/05		04
MX-5 I	1.6	66	8AN1	01/95 → 04/98		04
		85	B64F	05/90 → 01/94		04
MX-5 II	1.8	103	BPD	01/98 → 07/02		04
		107	BP6J	08/02 → 10/05		04
	1.8 16V	102	BPD	11/00 → 10/05		04
		103	BP-ZE	05/98 → 10/05		04
		107	BPD	11/00 → 10/05		04
		107	BP-ZE	11/00 → 10/05		04
PROTÉGÉ IV	1.8 16V GT	94	BP (DOHC)	06/89 → 07/94		04
PROTÉGÉ V	1.6	80	B6 (DOHC)	08/94 → 09/98		04
	1.6 Protégé	80	B6 (DOHC)	08/94 → 09/98		04
	1.8	92	BP (DOHC)	07/94 → 09/98		04
	1.8 Protégé	92	BP (DOHC)	07/94 → 09/98		04
PROTÉGÉ VI	1.8 Protégé	92	BP (DOHC)	05/98 → 05/04		04
ROADSTER II	1.8	103	BPD	01/98 → 07/02		04
		107	BP6J	08/02 → 10/05		04
	1.8 16V	102	BPD	11/00 → 10/05		04
		103	BP-ZE	05/98 → 10/05		04
		107	BPD	11/00 → 10/05		04
		107	BP-ZE	11/00 → 10/05		04
TELSTAR IV	2.0 i	85	FS	01/92 → 04/97		04
	2.0 i 4WD	85	FS	04/92 → 04/97		04
XEDOS 6	1.6 16V	83	B69	08/92 → 05/94		04
	2.0 V6	103	KF1	06/94 → 10/99		06
		106	KF1	01/92 → 05/94		06

MAGNETI MARELLI

CT6KMR11

		kW				QTY
MERCEDES-BENZ						
A CLASS (W169)	A 150 (169.031, 169.331)	70	M 266.920	09/04 → 06/12	→ 03/08	04
	A 160 (169.031, 169.331)	70	M 266.920	04/09 → 06/12		04
	A 170 (169.032, 169.332)	85	M 266.940	09/04 → 06/12	→ 03/08	04
	A 180 (169.032, 169.332)	85	M 266.940	04/09 → 06/12		04
	A 200 (169.033, 169.333)	100	M 266.960	09/04 → 06/12		04
B CLASS (W245)	B 150 (245.231)	70	M 266.920	03/05 → 11/11	→ 03/08	04
	B 160 (245.231)	70	M 266.920	04/09 → 11/11		04
	B 170 (245.232)	85	M 266.940	03/05 → 11/11	→ 03/08	04
	B 170 NGT (245.233)	85	M 266.960	04/08 → 11/11	→ 06/09	04
	B 180 (245.232)	85	M 266.940	04/09 → 11/11		04
	B 180 NGT (245.233)	85	M 266.960	04/08 → 11/11	06/09 →	04
	B 200 (245.233)	100	M 266.960	03/05 → 11/11		04
CL CLASS Coupé (C140)	S 500 (140.070)	235	M 119.970	10/92 → 02/99		08
	SEC/CL 420 (140.063)	205	M 119.971	10/94 → 02/99		08
	SEC/CL 420 (140.063)	205	M 119.981	10/94 → 02/99		08
	SEC/CL 500 (140.070)	235	M 119.970	10/92 → 02/99		08
E CLASS (W124)	E 60 AMG (124.036)	280	M 119.974 (AMG 6.0)	05/94 → 06/95		08
	E 420 (124.034)	205	M 119.975	06/93 → 06/95		08
	E 500 (124.036)	235	M 119.974	06/93 → 06/95		08
E CLASS (W210)	E 50 AMG (210.072)	255	M 119.985 (AMG 5.0)	02/96 → 08/97		08
	E 420 (210.072)	205	M 119.985	01/96 → 06/97		08
E CLASS Station wagon (S210)	E 420 T (210.272)	205	M 119.985	06/96 → 06/97		08
S CLASS (W140)	400 SE, SEL/S420 (140.042, 140.043)	210	M 119.971	02/91 → 10/98		08
	500 SE, SEL (140.050, 140.051)	240	M 119.970	02/91 → 10/98		08
	500 SEL (140.050, 140.051)	235	M 119.980	01/93 → 10/98		08
		235	M 119.970	01/93 → 10/98		08
	S 420 (140.042)	205	M 119.971	01/93 → 10/98		08
	S 500 (140.050, 140.051)	235	M 119.970	01/93 → 10/98		08
		235	M 119.980	01/93 → 10/98		08
S CLASS Coupé (C140)	S 500 (140.070)	235	M 119.970	10/92 → 02/99		08
	SEC/CL 420 (140.063)	205	M 119.971	10/94 → 02/99		08
		205	M 119.981	10/94 → 02/99		08
	SEC/CL 500 (140.070)	235	M 119.970	10/92 → 02/99		08
SL (R129)	500 (129.067)	235	M 119.982	09/92 → 10/01		08
		235	M 119.972	09/92 → 10/01		08
	500 SL (129.066)	240	M 119.972	09/89 → 08/92		08
		240	M 119.960	09/89 → 08/92		08

CT6KMR11

		kW				QTY
MERCEDES-BENZ						
Tre volumi (W124)	400 E 4.2 (124.034)	205	M 119.975	10/92 → 06/93		08
	500 E (124.036)	240	M 119.974	01/91 → 06/93		08
	500 E AMG 6.0 (124.036)	275	M 119.974 (AMG 6.0)	01/92 → 06/93		08
MITSUBISHI						
ASPIRE VI	2.0 (EA2A)	98	4G63 (SOHC 16V)	09/00 → 10/04	→ 05/03	04
		100	4G63 (SOHC 16V)	09/96 → 09/00		04
CARISMA	1.6 (DA1A)	66	4G92 (SOHC 16V)	07/95 → 06/06		04
		70	4G92 (SOHC 16V)	12/98 → 06/06		04
		73	4G92 (SOHC 16V)	05/97 → 06/06		04
		76	4G92 (SOHC 16V)	09/00 → 06/06		04
	1.8 (DA2A)	85	4G93 (SOHC 16V)	07/95 → 06/06	→ 02/99	04
CEDIA	1.3	60	4G13 (16V)	09/03 →		04
	1.6 (CS3A)	72	4G18	09/03 →		04
CHARIOT	2.0 (N33W)	98	4G63 (SOHC 16V)	10/92 → 10/98		04
	2.0 i GLX 16V (N33W)	98	4G63 (SOHC 16V)	10/92 → 10/98		04
	2.4 i (N34W)	102	4G64 (SOHC 16V)	10/92 → 10/98	→ 05/96	04
COLT IV	1.6 (CA4A)	66	4G92 (SOHC 16V)	02/94 → 04/96		04
	1.6 4WD (CC4A)	84	4G92 (SOHC 16V)	08/93 → 08/95	12/93 →	04
	1.6 GLXi 16V (CA4A)	83	4G92 (SOHC 16V)	04/92 → 04/96	12/93 →	04
	1.8 GTi 16V (CA5A)	103	4G93 (DOHC 16V)	04/92 → 04/96		04
COLT V	1600	76	4G92 (SOHC 16V)	09/00 → 09/03		04
	1.6 GLX 16V (CJ4A)	66	4G92 (SOHC 16V)	05/96 → 09/00	→ 05/99	04
	1600 GLX (CJ4A)	66	4G92 (SOHC 16V)	05/96 → 09/00	→ 05/99	04
ETERNA V	1.8 GLSI (E52A)	93	4G93 (SOHC 16V)	11/92 → 08/96		04
EXPO	2.0 (N33W)	98	4G63 (SOHC 16V)	10/92 → 10/98		04
	2.0 i GLX 16V (N33W)	98	4G63 (SOHC 16V)	10/92 → 10/98		04
	2.4 i (N34W)	102	4G64 (SOHC 16V)	10/92 → 10/98	→ 05/96	04
GALANT V	1.8 (E52A)	85	4G93 (SOHC 16V)	02/94 → 08/96		04
	1.8 GLSI (E52A)	93	4G93 (SOHC 16V)	11/92 → 08/96		04
	2.0 V6-24 (E64A, E54A)	110	6A12	11/92 → 08/96		06
GALANT VI	2.0 (EA2A)	98	4G63 (SOHC 16V)	09/00 → 10/04	→ 05/03	04
		100	4G63 (SOHC 16V)	09/96 → 09/00		04
LANCER	1.3	60	4G13 (16V)	09/03 →		04
	1.6	72	4G18	09/03 → 10/08	→ 06/08	04
	1.6 (CS3A)	72	4G18	09/03 →		04
LANCER IV	1.5 (C62A)	62	4G15 (12V)	04/88 → 05/92		04
	1.6 16V (C76A, C66A)	83	4G92 (SOHC 16V)	06/92 → 05/94		04
	1.6 4WD (C76A, C66A)	84	4G92 (SOHC 16V)	06/92 → 11/93		04
	1.8 GTi 16V (C69A)	103	4G93 (DOHC 16V)	06/92 → 12/93		04

MAGNETI MARELLI

CT6KMR11

		kW				QTY
MITSUBISHI						
LANCER V	1.6 (CB4A)	66	4G92 (SOHC 16V)	02/94 → 12/96		04
	1.6 16V (CB4A)	83	4G92 (SOHC 16V)	06/92 → 12/96	12/93 →	04
	1.6 16V (CB4W)	83	4G92 (SOHC 16V)	12/92 → 10/03	12/93 →	04
	1.6 16V 4WD (CD4A)	83	4G92 (SOHC 16V)	06/92 → 12/96	12/93 →	04
	1.6 16V 4WD (CD4W)	83	4G92 (SOHC 16V)	12/92 → 10/03	12/93 →	04
	1.6 GLX 16V (CB4A)	83	4G92 (SOHC 16V)	06/92 → 12/96	12/93 →	04
	1.8 16V (CB5A)	103	4G93 (DOHC 16V)	06/92 → 12/93		04
LANCER VI	1.6 16V (CK4A)	66	4G92 (SOHC 16V)	12/95 → 08/03	→ 05/99	04
LEGNUM VI	2.0 (EA2W)	98	4G63 (SOHC 16V)	09/00 → 10/03	→ 09/02	04
	2.0 (EA2W)	100	4G63 (SOHC 16V)	09/96 → 09/00		04
LIBERO V	1.6 (CB4A)	66	4G92 (SOHC 16V)	02/94 → 12/96		04
	1.6 16V (CB4A)	83	4G92 (SOHC 16V)	06/92 → 12/96	12/93 →	04
	1.6 16V 4WD (CD4A)	83	4G92 (SOHC 16V)	06/92 → 12/96	12/93 →	04
	1.6 16V 4WD (CD4A)	83	4G92 (SOHC 16V)	06/92 → 12/96	12/93 →	04
	1.6 GLX 16V (CB4A)	83	4G92 (SOHC 16V)	06/92 → 12/96	12/93 →	04
	1.6 GLX 16V (CB4A)	83	4G92 (SOHC 16V)	06/92 → 12/96	12/93 →	04
	1.8 16V (CB5A)	103	4G93 (DOHC 16V)	06/92 → 12/93		04
MIRAGE V	1600	76	4G92 (SOHC 16V)	09/00 → 09/03		04
	1.6 GLX 16V (CJ4A)	66	4G92 (SOHC 16V)	05/96 → 09/00	→ 05/99	04
	1600 GLX (CJ4A)	66	4G92 (SOHC 16V)	05/96 → 09/00	→ 05/99	04
NIMBUS	2.0	98	4G63 (SOHC 16V)	10/98 → 12/04		04
		98	4G63 (SOHC 16V)	10/98 → 12/04		04
	2.0 (N33W)	98	4G63 (SOHC 16V)	10/92 → 10/98		04
	2.0 i GLX 16V (N33W)	98	4G63 (SOHC 16V)	10/92 → 10/98		04
	2.4 i (N34W)	102	4G64 (SOHC 16V)	10/92 → 10/98	→ 05/96	04
RVR	1.8 (N11W)	90	4G93 (SOHC 16V)	10/91 → 08/99		04
	1.8 4WD (N21W)	85	4G93 (SOHC 16V)	06/96 → 08/99		04
		90	4G93 (SOHC 16V)	10/91 → 08/99		04
SPACE RUNNER	1.8 (N11W)	90	4G93 (SOHC 16V)	10/91 → 08/99		04
	1.8 4WD (N21W)	90	4G93 (SOHC 16V)	10/91 → 08/99		04
		85	4G93 (SOHC 16V)	06/96 → 08/99		04
SPACE STAR MPV	1.3 16V (DG1A)	60	4G13 (16V)	09/00 → 12/04	→ 03/01	04
		63	4G13 (16V)	06/98 → 12/04	→ 05/00	04
	1.6	72	4G92 (SOHC 16V)	04/01 → 12/04		04
	1.6 16V (DG3A)	72	4G18	01/01 → 12/04		04
SPACE WAGON	2.0	98	4G63 (SOHC 16V)	10/98 → 12/04		04
	2.0 (N33W)	98	4G63 (SOHC 16V)	10/92 → 10/98		04
	2.0 i GLX 16V (N33W)	98	4G63 (SOHC 16V)	10/92 → 10/98		04
	2.4 i (N34W)	102	4G64 (SOHC 16V)	10/92 → 10/98	→ 05/96	04
PROTON						
AEROBACK	1.6 EX	70	4 G 92	10/88 → 11/96		04
IMPIAN	1.6	76	4 G 18 P	09/01 →		04
ISWARA	1.6 EX	70	4 G 92	10/88 → 11/96		04
MPI	1.6 EX	70	4 G 92	10/88 → 11/96		04

CT6KMR11

		kW				QTY
PROTON						
PERSONA	316	70	4 G 92	03/96 →		04
	1.6	83	4 G 92	03/96 →		04
	1.6 Sprint	70	4 G 92	03/96 →		04
	316 GLXi	83	4 G 92	03/96 →		04
PERSONA 400	1.6	70	4 G 92	12/95 →		04
	416	70	4 G 92	08/00 → 02/02		04
	416 i	70	4 G 92	12/95 →		04
	416 GLXi	83	4 G 92	01/94 →		04
	1.8	85	4 G 93 (DOHC)	05/96 →		04
	418	85	4 G 93 (DOHC)	05/96 →		04
	418 GLXi	85	4 G 93 (DOHC)	05/96 →		04
SATRIA	316	70	4 G 92	03/96 →		04
	1.6	83	4 G 92	03/96 →		04
	1.6 Sprint	70	4 G 92	03/96 →		04
	316 GLXi	83	4 G 92	03/96 →		04
WAJA	1.6	76	4 G 18 P	09/01 →		04
WIRA	1.6	83	4 G 92	01/94 →		04
		70	4 G 92	08/00 → 02/02		04
	1.8	85	4 G 93 (DOHC)	05/96 →		04
	416	70	4 G 92	08/00 → 02/02		04
	416 i	70	4 G 92	12/95 →		04
	416 GLXi	83	4 G 92	01/94 →		04
	418	85	4 G 93 (DOHC)	05/96 →		04
	418 GLXi	85	4 G 93 (DOHC)	05/96 →		04
ROVER						
400	416 Si	83	D 16 Y2	05/95 → 03/00		04
SUBARU						
FORESTER	2.0 AWD	92	EJ202	06/98 → 09/02		04
IMPREZA	1.5	70	EJ15E	11/94 → 08/98		04
	1.5 L	66	EJ151	09/98 → 09/00		04
	1.5 L	70	EJ15E	11/95 → 08/98		04
	1.6	70	EJ161	09/98 → 09/00		04
	1.6 AWD	70	EJ161	12/00 →	→ 08/05	04
	1.6 AWD	66	EJ161	12/96 → 12/00		04
	1.6 i	66	EJ16	08/92 → 12/00		04
	1.6 i	70	EJ161	06/98 → 12/00		04
	1.6 i AWD	66	EJ16	08/92 → 12/00		04
	1.6 i AWD	70	EJ161	06/98 → 12/00		04
	1.8 AWD	76	EJ18	01/93 → 10/95		04
	1.8 i	76	EJ18E	11/95 → 06/96		04
	1.8 i AWD	76	EJ18	08/92 → 12/00		04
	2.0	85	EJ20E	09/96 → 08/98		04
	2.0 i	85	EJ20E	11/95 → 09/00	→ 09/98	04
	2.0 SW	85	EJ20E	09/96 → 08/98		04
	2.2 GX AWD	97	EJ22	11/95 → 08/98		04
	2.2 GX AWD	97	EJ22	01/02 →		04

MAGNETI MARELLI

CT6KMR11

		kW				QTY
SUBARU						
LEGACY I	1.6	70	EJ16	05/89 → 12/93		04
	1800	76	EJ18 SPI	01/89 → 12/93		04
	1800 4WD	76	EJ18 SPI	01/89 → 09/91		04
	2.0	85	EJ20E	08/91 → 12/93		04
	2.0 CVT	85	EJ20E	08/91 → 12/93		04
	2200 4WD	100	EJ22 EMPI	01/89 → 07/94		04
LEGACY II	2.0 CVT	85	EJ20E	09/94 → 03/99		04
	2.0 i	85	EJ20E	09/94 → 03/99		04
	2.0 i 4WD	85	EJ20E	09/94 → 03/99		04
	2.0 i 4WD	85	EJ201	09/94 → 03/99		04
	2.2	94	EJ22	07/94 → 11/98	→ 06/97	04
	2.2 i 4WD	94	EJ22 EMPI	09/94 → 03/99		04
	2.2 i 4WD	96	EJ22 EMPI	06/96 → 03/99	→ 06/97	04
LIBERTY I	1.6	70	EJ16	05/89 → 12/93		04
	1800	76	EJ18 SPI	01/89 → 12/93		04
	1800 4WD	76	EJ18 SPI	01/89 → 09/91		04
	2.0	85	EJ20E	08/91 → 12/93		04
	2.0 CVT	85	EJ20E	08/91 → 12/93		04
	2200 4WD	100	EJ22 EMPI	01/89 → 07/94		04
LIBERTY II	2.0 CVT	85	EJ20E	09/94 → 03/99		04
	2.0 i	85	EJ20E	09/94 → 03/99		04
	2.0 i 4WD	85	EJ201	09/94 → 03/99		04
	2.0 i 4WD	85	EJ20E	09/94 → 03/99		04
	2.2	94	EJ22	07/94 → 11/98	→ 06/97	04
	2.2 i 4WD	94	EJ22 EMPI	09/94 → 03/99		04
	2.2 i 4WD	96	EJ22 EMPI	06/96 → 03/99	→ 06/97	04
MINI JUMBO	0.7	35	EN07E	07/90 → 03/92		04
	0.7	47	EN07Z	07/90 → 02/92		04
	0.7 4WD	35	EN07E	07/90 → 03/92		04
	0.7 Kompressor 4WD	47	EN07Z	07/90 → 02/92		04
REX	0.7	35	EN07E	07/90 → 03/92		04
	0.7	47	EN07Z	07/90 → 02/92		04
	0.7 4WD	35	EN07E	07/90 → 03/92		04
	0.7 Kompressor 4WD	47	EN07Z	07/90 → 02/92		04
REX III	0.7	35	EN07E	07/90 → 03/92		04
	0.7	47	EN07Z	07/90 → 02/92		04
	0.7 4WD	35	EN07E	07/90 → 03/92		04
	0.7 Kompressor 4WD	47	EN07Z	07/90 → 02/92		04
VIVIO	0.7	32	EN07E	08/92 → 12/98	→ 10/95	04
	660 4WD	32	EN07E	03/92 → 10/95		04
	660 i GLI	32	EN07E	08/92 → 12/98	→ 10/95	04

CT6KMR11

		kW				QTY
SUZUKI						
BALENO	1.8 GTX (SY418)	89	J18A	03/96 → 05/02		04
	1.8 i 16V (SY418)	89	J18A	08/96 → 05/02		04
GRAND ESCUDO I	2.0 (SQ 420)	94	J20A	03/98 → 07/03		04
	2.0 4x4 (SQ 420)	94	J20A	03/98 → 07/03		04
	2.0 i 16V (SQ 420)	94	J20A	03/98 → 07/03		04
	2.5 V6 24V (SQ 625)	116	H 25 A	04/01 → 07/03		06
	2.5 V6 24V (TD62, SQ 625)	106	H 25 A	04/98 → 07/03		06
	2.5 V6 24V 4x4 (SQ 625)	106	H 25 A	04/98 → 07/03		06
		116	H 25 A	04/01 → 07/03		06
	2.7 (JA 627)	135	H 27 A	04/03 → 07/03		06
	2.7 (TX92, JA 627)	135	H 27 A	04/03 → 07/03		06
	2.7 4x4 (JA 627)	127	H 27 A	09/01 → 07/03		06
	2.7 4x4 (JA 627)	135	H 27 A	04/03 → 07/03		06
GRAND ESCUDO II	1.6 (TA74, JB416)	73	M16A	09/05 →		04
	1.6 Trazione integrale (JB416)	73	M16A	09/05 →		04
		78	M16A	04/05 →		04
	2.0 (TD54, JB420)	103	J20A	10/05 →		04
	2.0 SZ (JB420)	103	J20A	10/05 →		04
	2.0 Trazione integrale (JB420)	103	J20A	10/05 →		04
GRAND VITARA I	2.0 (SQ 420)	94	J20A	03/98 → 07/03		04
	2.0 4x4 (SQ 420)	94	J20A	03/98 → 07/03		04
	2.0 i 16V (SQ 420)	94	J20A	03/98 → 07/03		04
	2.5 V6 24V (SQ 625)	116	H 25 A	04/01 → 07/03		06
	2.5 V6 24V (TD62, SQ 625)	106	H 25 A	04/98 → 07/03		06
	2.5 V6 24V 4x4 (SQ 625)	106	H 25 A	04/98 → 07/03		06
		116	H 25 A	04/01 → 07/03		06
	2.7 (JA 627)	135	H 27 A	04/03 → 07/03		06
	2.7 (TX92, JA 627)	135	H 27 A	04/03 → 07/03		06
	2.7 4x4 (JA 627)	127	H 27 A	09/01 → 07/03		06
	2.7 4x4 (JA 627)	135	H 27 A	04/03 → 07/03		06
GRAND VITARA II	1.6 (TA74, JB416)	73	M16A	09/05 →		04
	1.6 Trazione integrale (JB416)	73	M16A	09/05 →		04
		78	M16A	04/05 →		04
	2.0 (TD54, JB420)	103	J20A	10/05 →		04
	2.0 SZ (JB420)	103	J20A	10/05 →		04
	2.0 Trazione integrale (JB420)	103	J20A	10/05 →		04

MAGNETI MARELLI

CT6KMR11

		kW				QTY
SUZUKI						
GRAND VITARA XL-7 I	2.0 (SQ 420)	94	J20A	03/98 → 07/03		04
	2.0 4x4 (SQ 420)	94	J20A	03/98 → 07/03		04
	2.0 i 16V (SQ 420)	94	J20A	03/98 → 07/03		04
	2.5 V6 24V (SQ 625)	116	H 25 A	04/01 → 07/03		06
	2.5 V6 24V (TD62, SQ 625)	106	H 25 A	04/98 → 07/03		06
	2.5 V6 24V 4x4 (SQ 625)	106	H 25 A	04/98 → 07/03		06
		116	H 25 A	04/01 → 07/03		06
	2.7 (JA 627)	135	H 27 A	04/03 → 07/03		06
	2.7 (TX92, JA 627)	135	H 27 A	04/03 → 07/03		06
	2.7 4x4 (JA 627)	127	H 27 A	09/01 → 07/03		06
	2.7 4x4 (JA 627)	135	H 27 A	04/03 → 07/03		06
GRAND VITARA XL-7 II	1.6 (TA74, JB416)	73	M16A	09/05 →		04
	1.6 Trazione integrale (JB416)	73	M16A	09/05 →		04
		78	M16A	04/05 →		04
	2.0 (TD54, JB420)	103	J20A	10/05 →		04
	2.0 SZ (JB420)	103	J20A	10/05 →		04
	2.0 Trazione integrale (JB420)	103	J20A	10/05 →		04
IGNIS	1.3 (RG413)	61	M13A	10/00 → 09/03		04
	1.3 1.3 i 16V (RG413)	61	M13A	10/00 → 09/03		04
	1.3 4WD (RG413)	61	M13A	10/00 → 09/03		04
JIMNY	1.6 VVT	76	M16A	05/04 →		04
JIMNY SIERRA	1.6 VVT	76	M16A	05/04 →		04
LIANA	1.6 (RH 416)	76	M16A	03/02 →		04
	1.6 4WD (RH 416)	76	M16A	03/02 →	02/04 →	04
	1.6 4WD (RH 416)	78	M16A	04/02 →	→ 01/04	04
	1.6 i	78	M16A	04/02 →	02/04 →	04
WAGON R+	1.3 (RB 413)	56	G13BB	05/00 → 12/04		04
	1.3 (RB 413)	69	M13A	09/03 →	→ 01/08	04
	1.3 4WD (RB 413)	56	G13BB	10/01 →	→ 01/08	04
VAUXHALL						
MONTEREY	3.2	130	6 VD1	06/92 → 07/98	05/94 →	06

CT7DKMR

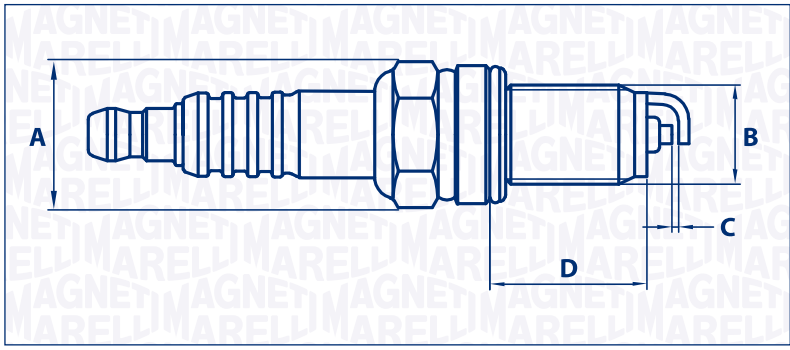

A	Hexagon Size	16
B	Thread Size	M12×1.25
C	Gap (mm)	0.8
D	Thread Reach	19.0
	Heat Range	7
	Type	Resistor
	Version	1 Mass Electrode
	Seat	Flat
	Core	Copper

BERU

0002240701 Z292 | 0002240702 Z293 | 12 FR 6 DU | 12 FR-6 LUX

BOSCH

41 | 0 241 145 510 | 0 242 135 501 | 0 242 135 515
0 242 140 504 | Y 5 DDC | YR 6 LDE | YR 7 DC
YR 7 DE

CHAMPION

OE186/T10 | OE199/T10 | RA7YC | RA8HC
RA8YC | RA8YCX4

DENSO

XU22EPR-U

NGK

1691 | 3932 | 4415 | 4795
4983 | 94037 | 97472 | DCPR7E
DCPR7EN | DCPR7E-N-10 | DCPR7ES | VL42
VL43 | V-Line 42 | V-Line 43 | ZKR7A
ZKR7A-10

		kW				QTY
ALFA ROMEO						
MITO (955_)	1.4	51	955 A9.000	05/11 →		04
		57	350 A1.000	03/11 →		04
		57	955 A1.000	03/11 →		04
		58	955 A1.000	09/08 →		04
		70	199 A6.000	09/08 →		04
BMW						
3 (E36)	M3	210	S50 B30 (306S1)	08/94 → 09/95		06
	M3 3.0	217	S50 B30 (306S1)	01/95 → 10/95		06
		210	S50 B30 (306S1)	08/94 → 09/95		06
	M3 3.2	236	S50 B32 (326S1)	09/95 → 02/98		06
5 (E34)	M5	250	S38 B38 (386S1)	03/92 → 09/95		06
CHEVROLET						
AVEO 2	1.2	55	B12D1	04/08 →		04
		55	LMU	01/08 →		04
		62	LMU	04/08 →		04
		62	B12D1	01/08 →		04
	1.2 LPG	62	B12D1	04/08 →		04
		62	LMU	01/09 →		04
BEAT	1.0	50	B10D1	03/10 →		04
	1.2	60	LMU	03/10 →		04
		60	B12D1	03/10 →		04
	1.2 LPG	60	B12D1	03/10 →		04
		60	LMU	03/10 →		04

MAGNETI MARELLI

CT7DKMR

		kW				QTY
CHEVROLET						
LOVA	1.2	55	B12D1	04/08 →		04
		55	LMU	01/08 →		04
		62	B12D1	04/08 →		04
		62	LMU	01/08 →		04
	1.2 LPG	62	LMU	04/08 →		04
		62	B12D1	01/09 →		04
MATIZ	1.0	50	B10D1	03/10 →		04
	1.2	60	LMU	03/10 →		04
		60	B12D1	03/10 →		04
	1.2 LPG	60	B12D1	03/10 →		04
		60	LMU	03/10 →		04
SPARK	1.0	50	B10D1	03/10 →		04
	1.2	60	LMU	03/10 →		04
		60	B12D1	03/10 →		04
	1.2 LPG	60	B12D1	03/10 →		04
		60	LMU	03/10 →		04
SPIN	1.5	79	L2C	01/13 →		04
CHRYSLER						
YPSILON	1.2	51	169 A4.000	05/11 →		04
FIAT						
500 (312_)	1.2	51	169 A4.000	10/07 →		04
	1.4	74	169 A3.000	10/07 →		04
	1.4 Sport	74	169 A3.000	10/07 →		04
500 C (312_)	1.2	51	169 A4.000	09/09 →		04
	1.4	74	169 A3.000	09/09 →		04
		75	EAB	09/11 →		04
		75	169 A3.000	09/11 →		04
500L (199_)	1.4	70	843 A1.000	09/12 →		04
BRAVO II (198_)	1.4	66	192 B2.000	04/07 →		04
	1.4 LPG	66	192 B2.000	11/09 →		04
DOBLO Cargo (223_)	1.4	57	350 A1.000	10/05 →		04
DOBLO Combi (263_)	1.4	70	843 A1.000	02/10 →		04
DOBLO MPV (119_, 223_)	1.4	57	350 A1.000	10/05 →		04
DOBLO MPV (263_)	1.4	70	843 A1.000	02/10 →		04
EGEA (356_)	1.4	70	843 A1.000	10/15 →		04
FIORINO (225_)	1.4	57	350 A1.000	10/09 →		04
GRANDE PUNTO (199_)	1.2	48	199 A4.000	10/05 →		04
	1.4	55	199 A7.000	06/06 →		04
		57	350 A1.000	10/05 →		04
	1.4 16V	70	199 A6.000	10/05 →		04
IDEA (350_)	1.4	57	350 A1.000	10/05 →		04
		66	192 B2.000	12/03 →		04
	1.4 16V	70	843 A1.000	01/04 →		04
LINEA (323_)	1.4	57	350 A1.000	06/07 →		04

CT7DKMR

		kW				QTY
FIAT						
PALIO (178_)	1.4 ELX Flex	63	310 A2.011	05/08 → 06/12		04
	1.4 Flex	63	310 A2.011	05/08 → 06/12		04
PALIO (178BX)	1.4	70	834 A1.000	06/03 →		04
PANDA (169_)	1.1	40	187 A1.000	09/03 →	→ 12/04	04
	1.2	44	188 A4.000	09/03 →	→ 09/04	04
		51	169 A4.000	03/10 →		04
	1.2 4x4	44	188 A4.000	10/04 →		04
		51	169 A4.000	11/09 →		04
	1.2 LPG	44	188 A4.000	04/09 →		04
	1.2 Natural Power	44	188 A4.000	01/07 → 11/09		04
	1.4	74	169 A3.000	10/06 →		04
	1.4 Natural Power	51	350 A1.000	01/10 →		04
		57	350 A1.000	09/10 →		04
PANDA (312_, 319_)	1.2	51	169 A4.000	02/12 →		04
	1.2 LPG	51	169 A4.000	06/12 →		04
PANDA Van (169_)	1.1	40	187 A1.000	09/04 →	→ 12/04	04
	1.2	44	188 A4.000	09/04 →	10/04 →	04
		51	169 A4.000	09/10 →		04
	1.2 4x4	44	188 A4.000	09/04 →	10/04 →	04
		51	169 A4.000	09/10 →		04
	1.2 LPG	51	169 A4.000	09/10 →		04
	1.4 Natural Power	57	350 A1.000	10/09 →		04
PUNTO (188_)	1.2 Bifuel	44	188 A4.000	08/07 →		04
	1.2 Natural Power	44	188 A4.000	09/03 →	→ 09/04	04
	1.4	71	199 A6.000	11/05 →		04
PUNTO (199_)	1.2	48	199 A4.000	10/05 →		04
		51	169 A4.000	03/12 →		04
	1.4	55	199 A7.000	03/12 →		04
		55	199 A7.000	06/06 →		04
		57	350 A1.000	10/05 →		04
		57	350 A1.000	03/12 →		04
	1.4 16V	70	199 A6.000	10/05 →		04
PUNTO EVO (199_)	1.2	48	199 A4.000	10/09 → 02/12		04
		51	169 A4.000	10/09 → 02/12		04
	1.4	55	199 A7.000	07/09 → 02/12		04
		57	350 A1.000	10/09 → 02/12		04
PUNTO Van (188_)	1.2 60	44	188 A4.000	02/00 → 10/09	→ 09/04	04
PUNTO Van (199_)	1.4	57	350 A1.000	04/08 →		04
QUBO (225_)	1.4	57	350 A1.000	10/09 →		04
RITMO III (198_)	1.4	66	192 B2.000	04/07 →		04
	1.4 LPG	66	192 B2.000	11/09 →		04
SEICENTO / 600 (187_)	1.1 (187AXB, 187AXB1A)	40	176 B2.000	01/98 → 01/10	10/00 → 10/04	04
STILO (192_)	1.4 16V	66	192 B2.000	03/05 → 11/06		04
		70	843 A1.000	01/04 → 11/06		04

MAGNETI MARELLI

CT7DKMR

		kW				QTY
FIAT						
TIPO (356_)	1.4	70	843 A1.000	10/15 →		04
FORD						
KA	1.2	51	FP4	10/08 →		04
LANCIA						
MUSA (350_)	1.4	57	350 A1.000	09/05 →		04
		66	192 B2.000	10/07 →		04
		70	843 A 1.000	10/04 →		04
YPSILON (312_)	1.2	51	169 A4.000	05/11 →		04
	1.2 Bifuel	49	169 A4.000	05/11 →		04
YPSILON (843_)	1.2	44	188 A4.000	10/03 → 12/11	→ 09/04	04
		51	169 A4.000	08/10 → 12/11		04
	1.4	57	350 A1.000	02/06 → 12/11		04
	1.4 16V	70	843 A 1.000	10/03 → 12/11		04
MITSUBISHI						
PAJERO MINI	0.7	37	4A30	10/94 → 08/98		04
		38	4A30	10/94 → 08/12	→ 08/02	04
	0.7 4WD	37	4A30	10/94 → 08/98		04
		38	4A30	10/94 → 08/12	→ 08/02	04
		47	4A30T	10/94 → 08/12	09/02 →	04
OPEL						
COMBO	1.4	70	A 14 FP	02/12 →		04
		88	A 14 FC	02/12 →		04
PORSCHE						
911 (996)	3.6 GT3	280	M 96.79	03/03 → 08/05	→ 12/03	06
SUZUKI						
ALTO	1.1 (RF410)	46	F10DN	09/04 → 12/08		04
		46	F10D	09/04 → 12/08		04
WAGON R+	1.0 (SR410)	48	K10A	02/98 → 05/00		04
	1.2 (SR412)	51	K12A	02/98 → 05/00		04
	1.2 4WD (SR412)	51	K12A	02/98 → 05/00		04

CT8DKMR

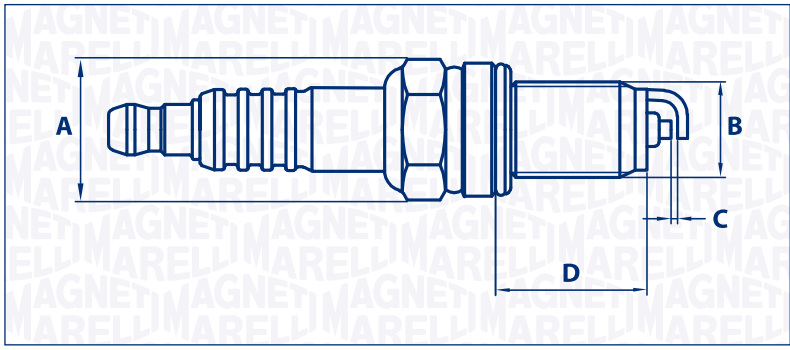

A	Hexagon Size	16
B	Thread Size	M12×1.25
C	Gap (mm)	0.8
D	Thread Reach	19.0
	Heat Range	8
	Type	Resistor
	Version	1 Mass Electrode
	Seat	Flat
	Core	Copper

BERU

0002245704 12FR5DU Z291

BOSCH

0 242 145 503 0 242 145 504 YR 5 DDE YR 5 LDE

CHAMPION

955 OE052/T10 OE073/T10 OE083/T10
OE132/T10 RA4HC RA4HCC RA4HCX
RA6 RA6HC RA6Y RA6YC

DENSO

XU24EPR-U

NGK

4179 5692 7168 DCP8E
DCPR8E DCPR8EKC DCPR8EN

		kW				QTY
FIAT						
ALBEA (178_)	1.2	59	188 A5.000	09/01 →		04
	1.2 ELX Fire 16V	59	188 A5.000	09/01 →		04
BRAVA (182_)	1.2 16V	64	182 B2.000	12/98 → 12/02		04
	1.2 16V 80	59	188 A5.000	10/00 → 10/01		04
		60	182 B2.000	12/98 → 12/02		04
BRAVO I (182_)	1.2 16V 80	59	188 A5.000	10/00 → 10/01		04
		60	182 B2.000	12/98 → 10/00		04
		64	182 B2.000	12/98 → 10/01		04
IDEA (350_)	1.2 16V	59	188 A5.000	01/04 →		04
MAREA (185_)	1.2 16V	60	182 B2.000	10/98 → 05/02	→ 05/99	04
PALIO (178_)	1.2	59	188 A5.000	09/01 →		04
	1.2 ELX	59	188 A5.000	09/01 →		04
	1.2 ELX Fire 16V	59	188 A5.000	09/01 →		04
PETRA (178_)	1.2	59	188 A5.000	09/01 →		04
	1.2 ELX Fire 16V	59	188 A5.000	09/01 →		04
PUNTO (176_)	1.2 16V	63	176 B9.000	04/97 → 09/99		04
PUNTO (188_)	1.2 16V 80 (188.233, .235, .253, .255, .333, .353, .639...)	59	188 A5.000	09/99 →		04
	1.4	70	843 A1.000	09/03 →		04
PUNTO Cabriolet (176_)	85 16V 1.2	63	176 B9.000	04/97 → 06/00		04
SIENA (178_)	1.2	59	188 A5.000	09/01 →		04
	1.2 ELX Fire 16V	59	188 A5.000	09/01 →		04
STILO (192_)	1.2 16V (192_XA1B)	59	188 A5.000	02/02 → 11/06		04

CT8DKMR

		kW				QTY
LANCIA						
Y (840_)	1.2 16V (840AD)	63	176 B9.000	04/97 → 09/03	→ 07/00	04
	1.2 16V (840AG1A)	59	188 A5.000	10/00 → 09/03		04
MASERATI						
425	2.24V	180	475	03/89 → 12/94		06
BITURBO	2.24V	180	475	03/89 → 12/94		06

CW6N

Hexagon Size	20.5
Thread Size	M14×1.25
Gap (mm)	0.8
Thread Reach	12.7
Heat Range	6
Type	Resistor
Version	1 Mass Electrode
Seat	Flat
Core	Nickel

BERU

0001400701	0001435705	14 X-AU	14-7 A
147 AU	14Z6A2	Z57	Z85

BOSCH

0 241 235 607	0 241 235 619	0 241 240 603	0 242 235 533
W 6 AC	W 7 AC	WR 7 AC	

CHAMPION

L85	L85C	L9J	QL86
QL86C	QL87C	RL86	RL86C

DENSO

W20FSR-U

NGK

1052	1090	2417	3922
4200	4510	5639	6154
B6HS	B6HS-10	B6HS-5	B6HSA
BR6HS	BR6HS10		

		kW				QTY
CITROËN						
MEHARI	4x4	21	A06/635	10/97 → 10/87		02

CW6NP

Hexagon Size	20.5
Thread Size	M14×1.25
Gap (mm)	0.8
Thread Reach	12.7
Heat Range	6
Type	Resistor
Version	1 Mass Electrode
Seat	Flat
Core	Nickel

BERU

0001435700	0001440700	0002435701	14 R-7 BU
14-6 B	14-6 BU	14-7 B	14-7 BU
14R6B	14R6BU	14R7B	Z10
Z19	Z48		

BOSCH

10	0 242 235 665	0 242 240 561	9 240 033 535
W 7 BC	WR 6 BC	WR 7 B	

CHAMPION

L66Y	L87Y	L87YC	L87YCC
L9YC	OE007/R04	OE007/T10	OE070/T10
PL9YC	QL87YC	RL87Y	RL87YC
RL87YCC			

DENSO

W20FPR-U

NGK

3975	4511	4553	5343
7022	7331	92010	94313
BP6H	BP6HS	BPR6H	BPR6HS
VL18	VL3	V-Line 18	V-line 3

		kW				QTY
OPEL						
FRONTERA A	2.4 i (53MWL4)	92	C 24 NE	03/92 → 10/98	→ 02/95	04
		92	C 24 NE	03/92 → 10/98	→ 02/95	04
OMEGA A	2.4 i	92	C 24 NE	09/88 → 03/94		04
	2.6 i	110	C 26 NE	09/90 → 03/94		06
	3.0 (3000)	115	C 30 LE	03/87 → 12/87		06
		130	30 NE	03/87 → 09/90		06
SENATOR B	2.5 i	103	25 NE	09/90 → 09/93		06
	2.6 i	110	C 26 NE	09/90 → 09/93		06
	3.0	115	C 30 LE	09/87 → 09/93		06
		130	30 NE	01/88 → 09/90		06
VAUXHALL						
CARLTON Mk III	2.6 i	110	C 26 NE	09/90 → 03/94		06
		110	C 26 NE	09/90 → 03/94		06
	3.0 3000	130	30 NE	03/87 → 09/90		06
		130	30 NE	03/87 → 09/90		06
FRONTERA Mk I (A)	2.4 i	92	C 24 NE	03/92 → 10/98		04
		92	C 24 NE	03/92 → 10/98		04
SENATOR Mk II (B)	2.5 i	103	25 E	09/87 → 10/90		06
		103	25 E	09/87 → 10/90		06
	2.6 i	110	C 26 NE	09/90 → 09/93		06
		110	C 26 NE	09/90 → 09/93		06

CW6NP

		kW				QTY
VAUXHALL						
SENATOR Mk II (B)	3.0	130	30 NE	01/88 → 09/90		06
		130	30 NE	01/88 → 09/90		06
	3.0 i Cat	130	C 30 NE	01/88 → 09/93	→ 08/92	06
		130	C 30 NE	01/88 → 09/93	→ 08/92	06

CW7LP

Hexagon Size	20.5
Thread Size	M14×1.25
Gap (mm)	0.9
Thread Reach	19.0
Heat Range	7
Type	Resistor
Version	1 Mass Electrode
Seat	Flat
Core	Nickel

BERU

0001335714 0001335737 14-6 D 14-7 D
14-7 DU0 Z61 Z62

BOSCH

0 241 240 611 W 6 DC

CHAMPION

N281YC N66Y N8Y N9Y
N9YCC N9YCX OE001/R04 OE001/T10
OE022/T10

DENSO

W20EPU

NGK

5039 5637 7529 7639
BP6E BP6ESZ VL4 V-line 4

		kW				QTY
ALPINA						
B10 (E34)	3.4	187	M30 B34 (34C20)	04/88 → 12/92		06
CITROËN						
C25	2.0	62	170C (XN1T)	02/91 → 02/94		04
FIAT						
TALENTO (290_)	2.0 (290UEH4)	55	170 B	03/89 → 03/94		04
TIPO (160_)	1.8 i.e.	81	159 A4.000	10/90 → 06/93		04
	1.8 i.e. (160.EQ, 160.AM)	74	159 A4.000	10/94 → 10/95		04
MERCEDES-BENZ						
G CLASS (W463)	G 500 E (463.228)	177	M 117.965	09/93 →		08
S CLASS (W126)	500 SE, SEL	185	M 117.965	09/87 → 06/91		08
		195	M 117.965	09/87 → 06/91		08
	500 SE, SEL Cat	185	M 117.965	06/89 → 06/91		08
	560 SE, SEL	205	M 117.968	08/87 → 06/91		08

CW7LP

		kW				QTY
PEUGEOT						
J5	2.0	62	170D (XN1TACP)	09/90 → 01/94		04
		62	XN1TA	09/90 → 01/94		04
RENAULT						
CLIO	1.8 (B/C578)	66	F3P 755	08/94 → 09/98		04
		66	F3P 754	08/94 → 09/98		04
MEGANE I	2.0 i	80	F3R 751	03/99 → 08/03		04
		80	F3R 750	03/99 → 08/03		04
	2.0 i (BA0G)	84	F3R 750	01/96 → 08/03		04
		84	F3R 751	01/96 → 08/03		04
MEGANE Scenic	2.0 i (JA0G)	80	F3R 796	01/99 → 09/99		04
		84	F3R 750	01/97 → 09/99		04
		84	F3R 751	01/97 → 09/99		04
ROVER						
MAESTRO	1.3	49	12 HE	09/90 → 01/95		04
		51	12 HE	09/90 → 01/95		04
MONTEGO	2.0 i Cat	75	20 H	12/90 → 10/94	→ 01/92	04
VOLKSWAGEN						
GOLF II	1.8 Syncro	72	1P	08/88 → 07/91		04
JETTA II	1.3 Cat	40	2G	06/87 → 12/91		04
		40	NZ	06/87 → 12/91		04
		40	MH	06/87 → 12/91		04
LT 28-35 I	2.0	55	CH	04/97 → 09/83		04
	2.4 i	69	1E	08/89 → 06/96		06
LT 28-50	2.4 i	69	1E	08/89 → 06/96		06
LT 40-55 I	2.4 i	69	1E	01/93 → 06/96		06
POLO (86C, 80)	1.0 Cat	33	ACM	08/89 → 09/94		04
		33	AAU	08/89 → 09/94		04
		33	AAK	08/89 → 09/94		04
VOLVO						
740	2.0	86	B 200 E	01/87 → 08/88		04

CW7LPR

Hexagon Size	20.5
Thread Size	M14×1.25
Gap (mm)	0.8
Thread Reach	19.0
Heat Range	7
Type	Resistor
Version	1 Mass Electrode
Seat	Flat
Core	Nickel

BERU

0001335702	0001340702	0001340707	0002335701
0002340701	14 R-6 DU	14-6 D1	14-6 DU
14-6 DU0	147DU	14R6D	14R7D
14R7DU	Z11	Z20	Z22
Z27	Z50		

BOSCH

1	12	0 241 235 755	0 242 235 663
0 242 240 592	W 7 DC	WR 6 D	WR 7 D

CHAMPION

3415	1L4J	1L4JR	4VLSR
9FYS	9FYSR	9FYSSR	EON5/286
EON5/287	OE004/R04	OE004/T10	OE006/R04
OE006/T10	OE111/T10	RN10Y	RN10YC
RN281YC	RN8YC	RN9Y	RN9YC
RN9YCC	RN9YCE	RN9YCX	V4LSR

DENSO

W20EPRU

NGK

2268	2948	4008	6464
7811	7822	91406	94811
BP6ES	BP6ESA	BP6EZ	BPR6E
BPR6E11	BPR6ES	BPR6EZ	VL2
V-line 2			

		kW				QTY
AUSTIN						
MINI	1000 Mayfair Sport	30	99 HD81	09/88 → 06/93		04
AUTOBIANCHI						
Y10	1.3 i.e. GT	57	156B.000	06/89 → 10/95	→ 09/92	04
BEDFORD						
MIDI	2.0 4WD	62	4ZC1	06/88 → 08/92		04
BENTLEY						
CONTINENTAL	6.75 V8 R	265	L 410 IT	10/91 → 08/99		08
TURBO R	6.7 S	298	L 410 IT	01/94 → 12/95		08
BMW						
5 (E34)	525 i	125	M20 B25 (256K1)	01/88 → 08/91		06
CHEVROLET						
AVEO	1.5	62	F15S3	05/05 →		04
		62	LX6	05/05 →		04
KALOS	1.4	61	F14S3	03/05 →		04
LANOS	1.4	55	A 13 SM	11/05 →		04
	1.5	63	A15SMS	11/05 →		04

CW7LPR

		kW				QTY
DAEWOO						
CIELO	1.5	44	G15MF	08/96 → 08/97		04
		52	G15MF	02/95 → 08/97		04
		55	Y15L	04/95 → 07/97		04
ESPERO	1.8	66	C18LE	02/95 → 09/99		04
		70	C18LE	02/95 → 06/99		04
	2.02.0	74	C20LZ	10/91 → 09/93		04
		77	C20LE	02/95 → 06/99		04
		81	C20LE	10/93 → 09/94		04
	2.0 DLX	77	C20LE	02/95 → 06/99		04
GENTRA	1.5 SE	62	A15SMS	11/02 → 04/05		04
KALOS	1.4	61	F14S3	09/02 →		04
LACETTI	1.5 SX	63	A15SMS	04/97 → 05/99		04
LANOS	1.3	55	A14SMS	05/97 →	→ 07/05	04
	1.5	63	A15SMS	05/97 →	→ 07/05	04
		73	A15SMS	10/97 → 06/99		04
NEXIANEXIA	1.5	44	G15MF	08/96 → 08/97		04
		52	G15MF	02/95 → 08/97		04
		55	G15MF	02/95 → 08/97		04
		59	Y15L	07/08 →		04
REZZO	1.8	74	F18S2	09/00 →	→ 07/05	04
TACUMA	1.8	74	F18S2	09/00 →	→ 07/05	04
FIAT						
126 (126_)	700	19	126 A2.000	09/87 → 06/96	→ 12/93	02
CINQUECENTO (170_)	0.7 (170AA)	23	170 A.000	12/91 → 01/96		02
	0.7 i (170AD)	22	170 A.046	07/94 → 01/98		02
	0.9 (170AB)	30	170 A1.000	07/91 → 12/93		04
	0.9 i.e. (170AC)	30	170 A1.046	07/91 → 12/93		04
	0.9 i.e. S (170AF, 170CF)	29	1170 A1.000	07/91 → 07/99		04
		29	1170 A1.046	07/91 → 07/99		04
DUNA (146_)	70	49	146 A5.000	01/87 → 12/91		04
	70 1.3	49	146 A5.000	01/87 → 12/91		04
DUNA Weekend (146_)	60 1.1	43	146 A6.000	01/87 → 12/91		04
	70 1.3	49	146 A5.000	01/87 → 12/91		04
FIORINO (146_)	60 1.1	40	146 A9.000	05/88 → 12/93		04
	70 i.e. 1.4	49	146 C5.000	05/94 → 05/01		04
FIORINO (147_)	1.3	49	146 A5.000	12/87 → 08/93		04
PANDA (141_)	900	29	1170 A1.046	04/92 → 12/96		04
REGATA (138_)	90 i.e. 1.6	66	149 C2.000	01/87 → 07/89		04
SEICENTO / 600 (187_)	0.9 (187AXA, 187AXA1A)	29	1170 A1.046	01/98 → 01/10		04

MAGNETI MARELLI

CW7LPR

		kW				QTY
FIAT						
TEMPRA (159_)	1.4 i.e. (159.AC)	57	159 A2.000	03/91 → 08/96	→ 12/93	04
	1.4 i.e. (159.AC, 159.AX)	51	160 A1.046	03/92 → 08/96		04
		51	159 A2.000	03/92 → 08/96		04
		51	836 A4.000	03/92 → 08/96		04
	1.6 (159.AD)	63	159 B9.000	03/90 → 04/93	→ 12/91	04
	1.6 i.e. (159.AE)	57	159 A3.046	06/90 → 07/92		04
	1.8 i.e. (159.AZ)	66	835 C4.000	09/93 → 08/96		04
	1.8 i.e. (159.BY)	74	836 A5.000	10/94 → 08/96		04
TIPO (160_)	1.4 (160.AC)	52	160 A1.000	07/87 → 12/89		04
	1.4 i.e. (160.AP, 160.AD, 160.EA)	51	836 A4.000	05/89 → 04/95		04
	1.8 i.e.	66	835 C4.000	09/93 → 04/95		04
UNO (146_)	70 i.e.	53	146 C1.000	09/89 → 12/93		04
	70 i.e. 1.4	51	160 A1.046	09/89 → 12/93		04
		53	146 C1.000	09/89 → 12/93		04
	70 S 1.4	52	160 A1.048	09/89 → 10/92		04
HYUNDAI						
GRACE	2.4	84	G4CS	01/97 → 03/00		04
		90	G4CS	07/93 → 03/00		04
H-1 / STAREX	2.4	82	G4CS	06/97 → 04/04		04
H 150	2.4	84	G4CS	01/97 → 03/00		04
		90	G4CS	07/93 → 03/00		04
H 200	2.4	82	G4CS	06/97 → 04/04		04
LIBERO	2.4	82	G4CS	06/97 → 04/04		04
PORTER	2.4	82	G4CS	03/96 → 04/04		04
SATELLITE	2.4	82	G4CS	06/97 → 04/04		04
SONATA	2.4 i	83	G4CS	09/88 → 08/91		04
SONATA II	2.4 i	83	G4CS	09/88 → 08/91		04
INNOCENTI						
ELBA (146)	1.3 (146CW)	49	146 A5.000	08/91 → 12/96	→ 12/92	04
	1.4 i.e. (146EN, 146EQ)	49	146 C5.000	09/94 → 12/96		04
		49	146 D5.000	09/94 → 12/96		04
ISUZU						
MIDI	2.0 (98000)	61	4ZC1	01/89 →	→ 10/91	04
	2.0 4WD (94000)	61	4ZC1	01/89 →	→ 10/91	04
PICKUP	2.3	70	4ZD1	10/87 → 08/96		04
	2.6 LS	84	4ZE1	10/89 → 08/96		04
RODEO	2.3	70	4ZD1	10/87 → 08/96		04
	2.6 LS	84	4ZE1	10/89 → 08/96		04

CW7LPR

		kW				QTY
LADA						
DIVA	1100	39	BA3 21081	07/91 →		04
	1300	45	BA3 2108	07/91 →		04
		46	BA3 2108	05/90 →		04
		48	BA3 2108	05/89 → 07/97		04
		50	BA3 21115	02/96 →		04
	1500	50	BA3 21083	07/91 →		04
		52	BA3 2111	11/94 →		04
		53	BA3 21083	09/91 →		04
	1.5	57	VAZ-2111	01/00 →		04
		59	VAZ-2111	08/03 →		04
KALINA	1.6	60	VAZ-21114	10/04 →	→ 10/08	04
KALINKA	1500	49	BA3 2103	05/93 → 04/04		04
	1.6 (WAS21074)	56	BA3 2106	01/88 → 10/01		04
	1500 S (WAS21093)	52	BA3 21083	06/89 →		04
	1600 (WAS21074)	56	BA3 2106	01/88 → 10/01		04
	1700 i Classic (VAZ2107)	62	B032123	06/96 →		04
LAIKA	1500	49	BA3 2103	05/93 → 04/04		04
	1500 S (WAS21093)	52	BA3 21083	06/89 →		04
	1.6 (WAS21074)	56	BA3 2106	01/88 → 10/01		04
	1600 (WAS21074)	56	BA3 2106	01/88 → 10/01		04
	1700 i Classic (VAZ2107)	62	B032123	06/96 →		04
NIVA	1600 4x4	54	BA3 2121	01/87 → 03/95		04
	1700 i	59	BA3 21214	06/96 →		04
		60	BA3 21214	10/00 →		04
	1700 i 4x4	60	BA3 21214	10/00 →		04
NIVA II	1.7	61	BA3 21214	08/04 →		04
NOVA	1500	49	BA3 2103	05/93 → 04/04		04
	1500 S (WAS21093)	52	BA3 21083	06/89 →		04
	1.6 (WAS21074)	56	BA3 2106	01/88 → 10/01		04
	1600 (WAS21074)	56	BA3 2106	01/88 → 10/01		04
	1700 i Classic (VAZ2107)	62	B032123	06/96 →		04
RIVA	1500	49	BA3 2103	05/93 → 04/04		04
	1500 S (WAS21093)	52	BA3 21083	06/89 →		04
	1.6 (WAS21074)	56	BA3 2106	01/88 → 10/01		04
	1600 (WAS21074)	56	BA3 2106	01/88 → 10/01		04

MAGNETI MARELLI

CW7LPR

		kW				QTY
LADA						
SABLE	1100	39	BA3 21081	07/91 →		04
	1300	45	BA3 2108	07/91 →		04
		46	BA3 2108	05/90 →		04
		48	BA3 2108	05/89 → 07/97		04
		50	BA3 21115	02/96 →		04
	1500	50	BA3 21083	07/91 →		04
		52	BA3 2111	11/94 →		04
		53	BA3 21083	09/91 →		04
	1.5	57	VAZ-2111	01/00 →		04
		59	VAZ-2111	08/03 →		04
SAGONA	1100	39	BA3 21081	07/91 →		04
	1300	45	BA3 2108	07/91 →		04
		46	BA3 2108	05/90 →		04
		48	BA3 2108	05/89 → 07/97		04
		50	BA3 21115	02/96 →		04
	1500	50	BA3 21083	07/91 →		04
		52	BA3 2111	11/94 →		04
		53	BA3 21083	09/91 →		04
	1.5	57	VAZ-2111	01/00 →		04
		59	VAZ-2111	08/03 →		04
SAMARA	1100	39	BA3 21081	02/88 → 12/94		04
		43	BA3 21081	02/96 →		04
	1300	45	BA3 2108	09/91 →		04
		46	BA3 2108	01/88 →		04
		50	BA3 21115	02/96 →		04
	1500	50	BA3 21083	09/91 →	06/95 → 07/03	04
		52	BA3 2111	02/95 →	→ 07/03	04
		53	BA3 21083	01/88 →		04
	1.5	57	VAZ-2111	04/96 →		04
SIGNET	1500	49	BA3 2103	05/93 → 04/04		04
	1500 S (WAS21093)	52	BA3 21083	06/89 →		04
	1.6 (WAS21074)	56	BA3 2106	01/88 → 10/01		04
	1600 (WAS21074)	56	BA3 2106	01/88 → 10/01		04
	1700 i Classic (VAZ2107)	62	B032123	06/96 →		04
VEGA	1.5	52	BA3 2111	06/96 → 09/04		04
		54	BA3 2111	01/95 →	→ 01/07	04
		56	VAZ-2111	10/00 →	→ 01/09	04
		57	VAZ-2111	01/95 →	→ 01/09	04
	1.6	72	VAZ-21114	01/95 →		04

CW7LPR

		kW				QTY
LANCIA						
DEDRA (835_)	1.6 i.e. (835AB)	57	835 A1.046	08/89 → 03/93		04
	1.8 i.e. (835AC, 835BC)	80	835 A2.000	09/89 → 06/94		04
	1.8 i.e. (835BD, 835AD)	77	835 A2.046	09/89 → 07/99		04
	2.0 i.e. (835AI)	86	835 A5.000	09/89 → 07/92		04
	2.0 i.e. (835AL)	83	835 A5.046	09/89 → 07/99		04
DELTA (831_)	1.6 GT i.e. (831AB.010)	66	149 C2.000	05/87 → 08/92		04
DELTA II (836_)	1.4 i.e. (836AF, 836AH)	51	836 A4.000	10/94 → 08/99		04
		51	160 A1.046	10/94 → 08/99		04
	1.8 i.e. (836AG, 836AL)	66	835 C4.000	07/94 → 08/99		04
		66	836 A6.000	07/94 → 08/99		04
		66	836 C4.000	07/94 → 08/99		04
THEMA (834_)	2000 16V (834FA)	112	834 F1.000	08/92 → 12/93		04
	2000 i.e. 16V (834AA)	108	834 B2.000	05/88 → 08/92		04
	2000 i.e. 16V (834AI)	104	834 B2.246	02/89 → 05/92		04
	3000 V6 (834GD, 834FD)	126	834 F.000	08/92 → 07/94		06
Y10 (156_)	1.3 i.e. (156AB)	56	156 B.000	11/87 → 05/93		04
	1.3 i.e. (156AF)	53	156 B.000	02/89 → 12/95		04
LAND ROVER						
DISCOVERY	3.5 4x4	122	22 D	06/89 → 06/94		08
	3.5 4x4 (SALLJG)	113	22 D	06/89 → 06/94		08
	4.0 4x4	134	36 D	09/93 → 10/98		08
RANGE ROVER	3.5 4x4	107	31 D	01/87 → 09/90		08
MAZDA						
323 III	1.4	44	B3	04/87 → 07/89		04
ETUDE III	1.4	44	B3	04/87 → 07/89		04
FAMILIA III	1.4	44	B3	04/87 → 07/89		04
MITSUBISHI						
COLT III	1.3 (C51A)	51	4G13 (8V)	04/88 → 05/92	→ 06/90	04
	1.5 GLXi (C52A)	62	4G15	04/88 → 05/92		04
	1.6 GTi 16V (C53A)	91	4G61	04/88 → 05/90		04
DELICA III	2.0 (P23W, P23V)	82	4G63 (SOHC 16V)	06/94 → 05/02		04
ECLIPSE	2.0 i 16V (D22A, D27A)	110	4G63 (DOHC 16V)	04/91 → 11/95		04
	2.0 i 16V 4WD (D22A, D27A)	110	4G63 (DOHC 16V)	04/91 → 11/95		04
	2.0 Turbo	147	4G63 T (DOHC 16V)	12/89 → 03/94		04
ECLIPSE II	2000 GS 16V (D32A)	107	4G63 (DOHC 16V)	12/95 → 04/99		04
ETERNA IV	1.8 (E32A)	66	4G37	11/88 → 10/92		04
	2.0 (E39A, E38A, E33A)	80	4G63 (SOHC 8V)	04/89 → 10/92		04
	2.0 4WD (E33A, E38A, E39A)	80	4G63 (SOHC 8V)	04/89 → 10/92		04
	2.0 GTI 16V (E39A, E38A, E33A)	106	4G63 (DOHC 16V)	11/88 → 10/92		04
		107	4G63 (DOHC 16V)	11/88 → 10/92		04
	2.0 GTI 16V 4x4 (E38A, E39A, E33A)	106	4G63 (DOHC 16V)	07/89 → 12/92		04

MAGNETI MARELLI

CW7LPR

		kW				QTY
MITSUBISHI						
ETERNA V	2.0 GLSI (E55A)	101	4G63 (SOHC 16V)	11/92 → 08/96		04
	2.0 GLSI 4WD (E75A)	101	4G63 (SOHC 16V)	11/92 → 08/96		04
EXPO	2.0 4WD (N43W)	98	4G63 (SOHC 16V)	10/92 → 10/98		04
GALANT IV	1.8 (E32A)	66	4G37	11/88 → 10/92		04
	2.0 (E39A, E38A, E33A)	80	4G63 (SOHC 8V)	04/89 → 10/92		04
	2.0 4WD (E33A, E38A, E39A)	80	4G63 (SOHC 8V)	04/89 → 10/92		04
	2.0 GTI 16V (E39A, E38A, E33A)	106	4G63 (DOHC 16V)	11/88 → 10/92		04
		107	4G63 (DOHC 16V)	11/88 → 10/92		04
	2.0 GTI 16V 4x4 (E38A, E39A, E33A)	106	4G63 (DOHC 16V)	07/89 → 12/92		04
GALANT V	2.0 (E55A)	90	4G63 (SOHC 16V)	04/93 → 03/95		04
	2.0 GLSI (E55A)	101	4G63 (SOHC 16V)	11/92 → 08/96		04
	2.0 GLSI 4WD (E75A)	101	4G63 (SOHC 16V)	11/92 → 08/96		04
L 400	2.0 (PA3W)	83	4G63 (SOHC 16V)	09/95 → 10/02		04
	2.0 16V (PA3V/W, PB3V, PA3W)	85	4G63 (SOHC 16V)	05/95 → 05/00		04
LANCER IV	1.6 GTi (C63A)	91	4G61	05/88 → 05/90		04
	1.6 i (C63A)	90	4G61	09/90 → 09/92		04
	1.8 GTi 16V (C68A)	100	4G67	11/89 → 05/92		04
MIRAGE III	1.6 Gti	92	4G61	06/88 → 11/91		04
NIMBUS	2.0 4WD (N43W)	98	4G63 (SOHC 16V)	10/92 → 10/98		04
	2.0 GLXi (D04W)	74	4G63 (SOHC 8V)	06/88 → 04/91		04
	2.0 GLXi 4WD (D08W)	74	4G63 (SOHC 8V)	06/88 → 04/91		04
SPACE WAGON	2.0 4WD (N43W)	98	4G63 (SOHC 16V)	10/92 → 10/98		04
	2.0 GLXi (D04W)	74	4G63 (SOHC 8V)	06/88 → 04/91		04
	2.0 GLXi 4WD (D08W)	74	4G63 (SOHC 8V)	06/88 → 04/91		04
NISSAN						
NOMAD	2.0	66	Z20S	07/87 → 08/94	→ 01/90	04
VANETTE	2.0	66	Z20S	07/87 → 08/94	→ 01/90	04
OPEL						
ASCONA C	1.8	62	E 18 NV	09/87 → 08/88		04
	2.0 i	74	C 20 NEF	08/87 → 08/88		04
	2.0 i GT	95	20 SEH	03/87 → 08/88		04
ASTRA F	1.4	55	14 NV	09/91 → 09/93		04
		60	14 SE	09/92 → 09/98		04
	1.4 i	44	C 14 NZ	09/91 → 09/98		04
		44	X 14 NZ	09/91 → 09/98		04
	1.4 Si	60	C 14 SE	03/92 → 09/98		04
	1.6 i	52	X 16 SZ	05/93 → 07/96		04
		55	C 16 NZ	03/92 → 09/98		04
		55	X 16 SZR	03/92 → 09/98		04
	1.6 Si	74	C 16 SE	05/92 → 12/94		04
	1.8 i	66	C 18 NZ	03/92 → 09/98		04
	2.0 i	85	C 20 NE	03/92 → 09/98		04

CW7LPR

		kW				QTY
OPEL						
CORSA A	1.4 S	53	14 NV	01/90 → 03/93		04
	1.6 GSI	55	C 16 NZ	08/88 → 09/92		04
		72	C 16 SEI	09/89 → 03/93		04
		74	E 16 SE	05/88 → 03/92		04
	1.6 GSI Cat	74	C 16 SE	02/92 → 03/93		04
KADETT E	1.4 i	44	C 14 NZ	01/90 → 08/91		04
	1.4 S	55	14 NV	01/90 → 08/91		04
	1.8	84	18 E	09/87 → 08/90		04
	1.8 i	66	18 SV	09/90 → 08/91		04
		66	C 18 NZ	09/90 → 08/91		04
		66	C 18 NT	09/90 → 08/91		04
	1.8 S	62	E 18 NV	09/87 → 08/91		04
	2.0 i	85	20 SE	03/87 → 08/91		04
		85	20 NE	03/87 → 08/91		04
	2.0 i Cat	85	C 20 NE	03/87 → 08/91		04
OMEGA A	1.8	65	E 18 NVR	09/87 → 03/94		04
VECTRA A	1.4 S	55	14 NV	09/88 → 06/92		04
	1.6	60	16 SV	09/88 → 05/93		04
	1.8 S	65	E 18 NVR	09/88 → 07/89		04
		66	18 SV	09/89 → 10/90		04
	1.8 S 4x4	65	E 18 NVR	01/89 → 07/89		04
	2.0 i	95	20 SEH	09/88 → 09/92		04
	2.0 i 4x4	95	20 SEH	01/89 → 09/92		04
PIAGGIO						
APE TRUCK	1.0	33	CB41	02/93 → 06/94		03
		35	CB42	07/94 →		03
PORTER	1.0	33	CB41	02/93 → 05/98		03
		35	CB42	07/94 → 07/02		03
PORSCHE						
944	2.5	118	M 44.09	08/87 → 12/90		04
		118	M 44.05	08/87 → 12/90		04
		118	M 44.10	08/87 → 12/90		04
PROTON						
PERSONA	1.3	55	G 13 B	03/96 →		04
	1.5	64	G 15 B	09/96 →		04
	313i	55	G 13 B	03/96 →		04
	315 GLSi	64	G 15 B	09/96 →		04
SAGA	1.3 GLS 12V	50	4 G 13	01/91 → 06/96		04
	1.5 GLS 12V	55	4 G 15	01/91 → 06/96		04
SATRIA	1.3	55	G 13 B	03/96 →		04
	1.5	64	G 15 B	09/96 →		04
	313i	55	G 13 B	03/96 →		04
	315 GLSi	64	G 15 B	09/96 →		04

MAGNETI MARELLI

CW7LPR

		kW				QTY
RENAULT						
4	1.0	25	C1C 708	06/87 → 12/93	08/90 → 01/92	04
19	1.7	55	F2N 724	07/91 → 04/92		04
	1.7 (B/C53B)	54	F3N 740	09/88 → 04/92		04
		54	F3N 741	09/88 → 04/92		04
	1.7 (L53B)	54	F3N 740	10/89 → 04/92		04
		54	F3N 741	10/89 → 04/92		04
19 II	1.7 (B/C53B)	54	F3N 740	04/92 → 12/95		04
		54	F3N 741	04/92 → 12/95		04
	1.8 (5/353F, B/C538)	79	F3P 682	05/94 → 12/95		04
		79	F3P 765	05/94 → 12/95		04
	1.8 (B/C538)	81	F3P 700	04/92 → 05/94		04
21	1.4 (L48D)	51	C2J 770	06/88 → 10/93		04
	1.7 (B48F)	54	F3N 726	09/89 → 10/92		04
	1.7 (L48N)	64	F2N 752	06/87 → 04/89		04
	1.7 Cat (K48F)	54	F3N 726	05/88 → 06/93	09/89 →	04
CLIO	1.8	70	F3P 710	01/91 → 09/98		04
	1.8 (B/C57C, B/C57U)	65	F3P 714	01/91 → 09/98		04
		65	F3P 710	01/91 → 09/98		04
	1.8 Rsi (B/C579)	80	F3P 712	01/93 → 08/95		04
LAGUNA I	1.8	69	F3P 674	06/95 → 02/01		04
		70	F3P 676	06/95 → 06/98		04
	1.8 (B56A/B)	66	F3P 724	11/93 → 03/01		04
		66	F3P 720	11/93 → 03/01		04
	1.8 (B56S/T/0)	66	F3P 678	08/95 → 03/01		04
		66	F3P 670	08/95 → 03/01		04
	2.0	80	F3R 611	03/99 → 03/01		04
		84	F3R 768	06/95 → 02/01		04
		84	F3R 722	06/95 → 02/01		04
	2.0 (B56C/H/N)	83	F3R 723	11/93 → 03/01		04
		83	F3R 722	11/93 → 03/01		04
SUPER 5	1.2 (B/C40F)	40	C1G 720	01/87 → 08/90	03/90 →	04
		40	C1G 702	01/87 → 08/90	03/90 →	04
		40	C1G 722	01/87 → 08/90	03/90 →	04
	1.4 (B/C40J)	49	C2J 782	06/87 → 07/89		04
	1.4 (B/C40M)	44	C2J 784	06/87 → 08/90		04
TRAFIC	2.0	59	J5R 726	05/89 → 08/90		04

CW7LPR

		kW				QTY
ROVER						
MINI	1000	30	99 HD 81	01/92 → 06/93		04
	1300	37	12 A2B	10/92 → 11/00		04
		37	12 A2L	04/92 → 10/96		04
		37	12 A2B	04/92 → 10/96		04
		39	12 A2D	01/92 → 04/95		04
		39	12 A2L	05/96 → 10/96		04
		45	12 A2A	01/91 → 12/91		04
		46	12 A2L	01/92 → 11/00		04
		46	12 A2E	01/92 → 11/00		04
	1300 / Cooper	45	12 A2A	06/91 → 02/94		04
MONTEGO	2.0 GTi	86	20 H	10/88 → 10/91		04
SEAT						
IBIZA	0.9	29	146 A 000	08/90 → 05/93		04
		29	09 NCA	08/90 → 05/93		04
MARBELLA	0.9	29	09 NCA	01/87 → 12/93		04
		29	100 GL 7000	01/87 → 12/93		04
		32	08 NCB	07/97 → 10/98		04
	0.9 Cat	29	100 GL 7000	01/90 → 11/96		04
		29	09 NCB	01/90 → 11/96		04
		30	08 NCB	11/96 → 10/98		04
SUBARU						
LEONE II	1800 4WD	72	EA82	01/88 → 12/90		04
		88	EA82T	01/88 → 12/90		04
SUZUKI						
CARRY	1.3	58	G13BB	03/99 →		04
SWIFT II	1.0 (SF310, AA44)	37	G10A	03/89 → 05/01	09/96 →	03
	1.0 i (SF310, AA44)	39	G10A	01/95 → 12/05	09/96 →	03
		40	G10A	03/89 → 12/91		03
	1.3 (SF 413)	51	G13BA	03/89 → 10/96	09/96 →	04
		63	G13BB	06/01 → 12/03		04
	1.3 (SF413, AB35)	50	G13A	03/89 → 05/01	→ 08/96	04
	1.3 4WD (SF413, AF35)	52	G13A	10/89 → 12/91		04
	1.3 CINO (SF413, AB35)	50	G13A	03/89 → 05/01	→ 08/96	04
	1.3 GTi (SF413, AA34)	74	G13B	03/89 → 05/01	→ 08/96	04
VAUXHALL						
ASTRA Mk II	1.4 i	44	C 14 NZ	01/90 → 08/91		04
	1.4 S	55	14 NV	01/90 → 08/91		04
BRAVA Pick-up	2.3 (TFR16)	69	4 ZD1	08/91 → 08/94		04
		72	23 P	08/94 → 09/96		04
	2.3 4x4 (TFS16)	69	4 ZD1	06/90 → 08/94		04
		72	23 P	08/94 → 09/96		04
CARLTON Mk III	1.8	65	E 18 NVR	09/87 → 03/94		04
CAVALIER Mk II	2.0 SRi 130	95	20 SEH	03/87 → 08/88		04

MAGNETI MARELLI

CW7LPR

		kW				QTY
VAUXHALL						
CAVALIER Mk III	1.4 S	55	14 NV	09/88 → 11/95		04
	1.6	60	16 SV	09/88 → 05/93		04
	1.8	66	18 SV	09/88 → 08/95		04
		66	C 18 NZ	09/88 → 08/95		04
	2.0 i 4x4	95	20 SEH	09/88 → 09/92		04
	2.0 SRi	95	20 SEH	09/88 → 09/92		04
MIDI II	2.0	62	4ZC1	06/88 → 08/97	01/93 →	04
NOVA	1.4	44	C 14 NZ	10/90 → 08/92		04
	1.4 S	55	14 NV	01/90 → 02/93		04
NOVAVAN	1.2	38	12 NV	01/90 → 10/94	→ 03/93	04
VOLVO						
340-360	2.0	80	B 200 F	08/88 → 07/89		04
		81	B 200 F	08/87 → 07/88		04
440 K	1.7	58	B 18 KD	09/88 → 08/92		04
		60	B 18 KP	09/88 → 08/89		04
		60	B 18 K	09/88 → 08/89		04
		64	B 18 KP	09/88 → 12/96		04
		70	B 18 F	08/88 → 07/89		04
		75	B 18 FP	08/89 → 12/96		04
		78	B 18 EP	09/88 → 12/96		04
	1.8	66	B 18 U	08/91 → 07/96		04
		66	B 18 U	09/95 → 12/96		04
460 L	1.7	58	B 18 KD	09/89 → 08/91		04
		64	B 18 KP	09/88 → 07/96		04
		66	B 18 KP	09/90 → 07/96		04
		75	B 18 EP	08/89 → 07/92		04
		80	B 18 E	08/89 → 07/92		04
	1.8	66	B 18 U	08/91 → 07/96		04
740	2.0	76	B 200 K	09/88 → 08/90		04
		82	B 200 F	08/89 → 07/91		04
	2.0 Turbo	114	B 200 FT	09/90 → 08/91		04
		114	B 200 FT	09/90 → 08/91		04
	2.3	85	B 230 F	08/87 → 07/92		04
		100	B 230 FB	08/89 → 07/90		04
		111	B 234 F	08/88 → 08/92		04
		114	B 234 F	08/88 → 07/91		04
		114	B 234 F	08/88 → 07/90		04
		117	B 234 F	08/87 → 07/89		04
		117	B 234 F	08/87 → 07/89		04
	2.3 Turbo	121	B 230 FT	08/89 → 07/90		04
		121	B 230 GT	08/89 → 07/90		04
		125	B 230 GT	09/89 → 08/91		04
		125	B 230 FT	09/89 → 08/91		04
		140	B 230 FT	08/89 → 07/90		04
		140	B 230 FT	08/89 → 07/90		04

CW7LPR

		kW				QTY
VOLVO						
760	2.3	121	B 230 FT	01/88 → 07/92		04
	2.3 Turbo	115	B 230 FT	09/87 → 08/90		04
940	2.0	82	B 200 F	01/92 → 07/94		04
	2.0 Turbo	114	B 200 FT	08/90 → 12/94		04
		114	B 200 FT	01/91 → 07/95		04
	2.3	85	B 230 FD	08/92 → 07/94		04
		96	B 230 G	08/90 → 12/94		04
		96	B 230 FB	08/90 → 12/94		04
		114	B 234 G	08/90 → 07/91		04
		114	B 234 F	08/90 → 07/91		04
		118	B 230 FT	09/90 → 09/93		04
	2.3 Turbo	121	B 230 FT	08/90 → 07/94		04
		140	B 230 FT+	08/91 → 07/93		04
960	2.0	140	B 204 FT	08/90 → 09/93		04
	2.3 Turbo	121	B 230 FT	09/90 → 08/93		04
940 II	2.3	85	B 230 FD	08/94 → 07/95		04
		96	B 230 FB	08/94 → 10/98		04
	2.3 T	99	B 230 FK	01/95 → 10/98		04
	2.3 ti	99	B 230 FK	01/95 → 10/98		04
	2.3 Turbo	121	B 230 FT	08/94 → 10/98		04
		126	B 230 FT	01/95 → 12/98		04

CW7NP

Heat Range	7
Hexagon Size	20.5
Thread Size	M14×1.26
Type	Resistor
Version	2 Mass Electrode
Seat	Flat
Gap (mm)	0.8
Thread Reach	12.7
Core	Nickel

BERU

0001445700 144B2 14-5 BU 145B
Z41

CHAMPION

82CYS L64Y L7YC L81Y
L82Y L82YC L82YCC OE038/T10
OE064/T10 OE071/T10 OE104/T10 QL81Y
QL82YC RL82Y RL82YC RL82YCC

DENSO

W22FPRU

NGK

1092 1093 5111 5541
6422 BP7HS BPR7HS BPR7HS10
BPR7HSA BPZ7HS10

CW7NP

		kW				QTY
CITROËN						
CX I Break	25 TRI	100	M25-659	07/83 → 08/85		04
CX II Break	25 TRI	100	M25-659	08/85 → 12/92	→ 07/87	04
DACIA						
NOVA	1.4	48	-	04/96 → 03/01		04
FIAT						
PANDA (141_)	652 cc³ / 0.65 l	22	141 A.000	01/82 → 07/04		02

D6KMR

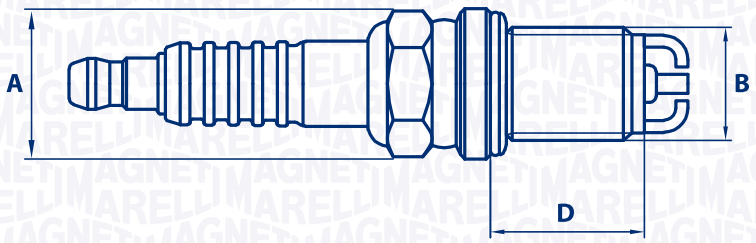

A	Hexagon Size	16
B	Thread Size	M14×1.25
C	Gap (mm)	0.9
D	Thread Reach	19.0
	Heat Range	6
	Type	Resistor
	Version	2 Mass Electrode
	Seat	Flat
	Core	Copper

CHAMPION

OE120/T10

DENSO

K20TNR-S9

NGK

7659 BKUR6EK9

		kW				QTY
ALPINA						
B3 (E36)	3.2	195	M60 B30 (308S)	04/96 → 04/99		06
B3 (E46)	3.3	206	M52 B28 (286S)	05/99 → 07/02		06
	3.3 Trazione integrale	206	M52 B28 (286S7T)	11/01 → 01/05		06
	3.4 S	224	M52 B28 (286ST5)	08/02 → 01/06		06
B8 (E36)	4.6	245	M62 B46 (468S4K)	01/95 → 03/98		08
B10 (E39)	3.2	191	M60 B30 (308S6K)	08/97 → 12/98		06
	3.3	206	M52 B28 (286S7T)	01/99 → 02/03		06
	4.6 V8	250	M62 B46 (468S72)	12/96 → 10/98		08
		255	M62 B46 (468S72)	10/98 → 09/02		08
B12 (E38)	5.7	285	M70 B57 (5714K2)	12/95 → 09/98		12
	6.0	316	M73 B54 (5412AG)	07/99 → 07/01		12
ROADSTER (Z8)	4.8 V8	280	M73 B48 (488S12)	06/02 → 10/03		08
ROADSTER S (Z4)	3.3	221	S54327S7	07/03 → 12/05		06

D6KMR

		kW				QTY
AUDI						
A4 (8D2, B5)	2.4	120	AMM	08/97 → 11/00		06
		120	AJG	08/97 → 11/00		06
		120	APZ	08/97 → 11/00		06
		121	APS	03/97 → 11/00		06
		121	AGA	03/97 → 11/00		06
		121	ALF	03/97 → 11/00		06
		121	AML	03/97 → 11/00		06
		121	ARJ	03/97 → 11/00		06
	2.4 quattro	120	APZ	08/97 → 11/00		06
		121	ALF	03/97 → 11/00		06
		121	AML	03/97 → 11/00		06
		121	ARJ	03/97 → 11/00		06
		121	APS	03/97 → 11/00		06
		121	AGA	03/97 → 11/00		06
	2.8	142	ACK	10/96 → 11/00		06
		142	ALG	10/96 → 11/00		06
		142	AMX	10/96 → 11/00		06
		142	APR	10/96 → 11/00		06
		142	AQD	10/96 → 11/00		06
		142	AHA	10/96 → 11/00		06
	2.8 quattro	142	AHA	10/96 → 08/01		06
		142	ACK	10/96 → 08/01		06
		142	ALG	10/96 → 08/01		06
		142	AMX	10/96 → 08/01		06
		142	APR	10/96 → 08/01		06
		142	AQD	10/96 → 08/01		06
A4 (8E2, B6)	2.4	120	AMM	09/01 → 12/04		06
		125	BDV	09/01 → 12/04		06
	3.0	160	BBJ	04/01 → 12/04		06
		162	AVK	11/00 → 12/04	→ 06/02	06
		162	ASN	11/00 → 12/04	→ 06/02	06
	3.0 30V	160	BBJ	04/01 → 12/04		06
	3.0 quattro	160	BBJ	04/01 → 12/04		06
		162	ASN	11/00 → 12/04		06
		162	AVK	11/00 → 12/04		06
A4 (8E5, B6)	2.4	120	AMM	09/01 → 12/04		06
		125	BDV	09/01 → 12/04		06
	3.0	160	BBJ	04/01 → 12/04		06
		162	ASN	09/01 → 12/04		06
	3.0 quattro	160	BBJ	04/01 → 12/04		06
		162	ASN	09/01 → 12/04	→ 06/02	06
		162	AVK	09/01 → 12/04	→ 06/02	06
A4 (8EC, B7)	3.0	160	BBJ	11/04 → 05/06		06
	3.0 30V	160	BBJ	11/04 → 05/06		06
	3.0 quattro	160	BBJ	11/04 → 07/06		06

MAGNETI MARELLI

D6KMR

		kW				QTY
AUDI						
A4 (8ED, B7)	3.0	160	BBJ	11/04 → 05/06		06
	3.0 30V	160	BBJ	11/04 → 05/06		06
	3.0 quattro	160	BBJ	11/04 → 07/06		06
A4 (8H7, B6, 8HE, B7)	2.4	120	AMM	04/02 → 12/05		06
		125	BDV	04/02 → 12/05		06
	3.0	162	ASN	04/02 → 12/05		06
	3.0 quattro	162	ASN	05/03 → 12/05		06
A6 (4A, C4)	2.8	142	ACK	12/95 → 10/97		06
	2.8 quattro	142	ACK	12/95 → 10/97		06
A6 (4B2, C5)	2.4	115	APC	02/97 → 01/05		06
		120	AMM	02/97 → 01/05		06
		120	AJG	02/97 → 01/05		06
		120	APZ	02/97 → 01/05		06
		121	ALF	02/97 → 01/05		06
		121	AGA	02/97 → 01/05		06
		121	ARJ	02/97 → 01/05		06
		121	APS	02/97 → 01/05		06
		121	AML	02/97 → 01/05		06
		125	BDV	08/10 → 01/05		06
	2.4 quattro	115	APC	08/98 → 07/99		06
		120	AJG	02/97 → 01/05		06
		120	APZ	02/97 → 01/05		06
		121	APS	02/97 → 01/05		06
		121	ARJ	02/97 → 01/05		06
		121	ALF	02/97 → 01/05		06
		121	AGA	02/97 → 01/05		06
		121	AML	02/97 → 01/05		06
		125	BDV	08/10 → 01/05		06
	2.4 V6	121	ALF	02/97 → 01/05		06
		121	AGA	02/97 → 01/05		06
		121	AML	02/97 → 01/05		06
		121	ARJ	02/97 → 01/05		06
		121	APS	02/97 → 01/05		06
	2.8	132	AGE	10/97 → 05/00		06
		140	ATX	07/99 → 01/05		06
		140	BBG	07/99 → 01/05		06
		142	AMX	02/97 → 01/05		06
		142	AHA	02/97 → 01/05		06
		142	ALG	02/97 → 01/05		06
		142	ACK	02/97 → 01/05		06
		142	APR	02/97 → 01/05		06
		142	AQD	02/97 → 01/05		06

D6KMR

		kW				QTY
AUDI						
A6 (4B2, C5)	2.8 quattro	132	AGE	01/98 → 04/00		06
		140	ATX	07/99 → 05/01		06
		142	APR	02/97 → 01/05		06
		142	AQD	02/97 → 01/05		06
		142	AMX	02/97 → 01/05		06
		142	AHA	02/97 → 01/05		06
		142	ALG	02/97 → 01/05		06
		142	ACK	02/97 → 01/05		06
	3.0	162	ASN	08/10 → 01/05		06
	3.0 quattro	160	BBJ	06/01 → 07/04		06
		162	ASN	08/10 → 01/05		06
	S6 quattro	250	ANK	09/99 → 01/05		08
		250	AQJ	09/99 → 01/05		08
A8 (4D2, 4D8)	2.8	142	AQD	04/96 → 09/02		06
		142	ACK	04/96 → 09/02		06
		142	ALG	04/96 → 09/02		06
		142	AMX	04/96 → 09/02		06
		142	APR	04/96 → 09/02		06
	2.8 quattro	142	AQD	04/96 → 09/02		06
		142	AMX	04/96 → 09/02		06
		142	APR	04/96 → 09/02		06
		142	ACK	04/96 → 09/02		06
		265	AVP	06/99 → 09/02		08
		265	AQH	06/99 → 09/02		08
A8 (4E_)	3.0	160	BBJ	07/03 → 05/06		06
		162	ASN	07/03 → 05/05		06
BENTLEY						
ARNAGE	4.4 V8	260	M62448S3	04/98 → 10/09		08
BMW						
1 (E81)	116 i	85	N45 B16 A	03/07 → 09/12		04
1 (E87)	116 i	85	N45 B16 A	11/03 → 09/12		04
3 (E30)	316 i	75	M40 B16 (164E1)	07/88 → 06/91		04
	318 is	100	M42 B18 (184S1)	09/89 → 08/91		04
3 (E36)	316 i	77	M43 B19 (194E1)	12/98 → 08/00		04
		73	M40 B16 (164E1)	09/90 → 09/93		04
		75	M43 B16 (164E2)	07/93 → 02/98	→ 08/93	04
	316 i Exclusive	73	M40 B16 (164E1)	09/90 → 09/93		04
		75	M43 B16 (164E2)	07/93 → 02/98	→ 08/93	04
	318 i	83	M40 B18 (184E1)	12/90 → 10/93		04
		85	M43 B18 (184E2)	10/93 → 02/98		04
	318 is	103	M42 B18 (184S1)	03/93 → 02/98		04
		103	M44 B19 (194S1)	09/95 → 02/98		04
		142	M52 B28 (286S1)	01/95 → 04/99		06
	318 is M Sport	103	M42 B18 (184S1)	03/93 → 02/98		04

MAGNETI MARELLI

D6KMR

		kW				QTY
BMW						
3 (E36)	318 ti	103	M42 B18 (184S1)	11/94 → 08/95		04
		103	M44 B19 (194S1)	07/95 → 08/00		04
	318i	103	M44 B19 (194S1)	09/95 → 02/98		04
	320 i	110	M50 B20 (206S1)	09/90 → 02/98		06
		110	M50 B20 (206S2)	09/90 → 02/98		06
		110	M52 B20 (206S3)	09/90 → 02/98		06
	323 i	125	M52 B25 (256S3)	03/95 → 02/98	07/97 →	06
	323 i 2.5	125	M52 B25 (256S3)	03/95 → 02/98	07/97 →	06
	323 is	125	M52 B25 (256S3)	03/95 → 04/99	07/97 →	06
	323 ti	125	M52 B25 (256S3)	08/97 → 08/00		06
	325 i	141	M50 B25 (256S1)	09/90 → 09/95		06
		141	M50 B25 (256S2)	09/90 → 09/95		06
	325 is	141	M50 B25 (256S1)	03/92 → 04/99		06
		141	M50 B25 (256S2)	03/92 → 04/99		06
	328 i	142	M52 B28 (286S1)	01/95 → 02/98		06
3 (E46)	316 Ci	77	M43 B16 (164E3)	04/00 → 07/06		04
		85	N45 B16 A	06/02 → 07/06		04
	316 i	77	M43 B16 (164E3)	04/00 → 02/05		04
		77	M43 B19 (194E1)	09/98 → 02/05		04
		85	N45 B16 A	06/02 → 02/05	→ 02/04	04
		85	N40 B16 A	06/02 → 02/05	→ 02/04	04
		85	N42 B18 A	02/02 → 02/05	→ 03/04	04
		85	N46 B18 A	02/02 → 02/05	→ 03/04	04
	316 ti	77	N40 B16 A	06/02 → 02/05		04
		85	N45 B16 A	06/02 → 02/05	→ 02/04	04
		85	N40 B16 A	06/02 → 02/05	→ 02/04	04
	318 Ci	87	M43 B19 (194E1)	11/99 → 09/01		04
		105	N42 B20 A	09/01 →	→ 02/04	04
		105	N46 B20 A	09/01 →	→ 02/04	04
	318 i	85	M43 B19 (194E1)	10/99 → 09/01		04
		87	M43 B19 (194E1)	02/98 → 09/01		04
		105	N46 B20 A	09/01 → 02/05	→ 02/04	04
		105	N42 B20 A	09/01 → 02/05	→ 02/04	04
	318 ti	105	N42 B20 A	09/01 → 02/05	→ 02/04	04
		105	N46 B20 A	09/01 → 02/05	→ 02/04	04
	320 Ci	120	M54 B22 (226S1)	01/06 → 12/07		06
		110	M52 B20 (206S4)	08/99 → 09/00		06
		125	M54 B22 (226S1)	09/00 →		06
	320 i	110	M52 B20 (206S4)	03/98 → 09/00		06
		125	M54 B22 (226S1)	09/00 → 02/05		06
	323 Ci	125	M52 B25 (256S4)	04/00 → 09/00		06
	323 i	125	M52 B25 (256S4)	03/98 → 09/00		06
	323 ti	125	M52 B25 (256S4)	03/98 → 09/00		06
	325 Ci	141	M54 B25 (256S5)	09/00 →		06
	325 i	141	M54 B25 (256S5)	09/00 → 02/05		06

D6KMR

		kW				QTY
BMW						
3 (E46)	325 ti	141	M54 B25 (256S5)	06/01 → 02/05		06
	325 xi	141	M54 B25 (256S5)	09/00 → 02/05		06
	328 Ci	142	M52 B28 (286S2)	04/99 → 06/00		06
	328 i	142	M52 B28 (286S2)	02/98 → 06/00		06
	328i	141	M54 B25 (256S5)	09/00 → 02/05		06
	330 Ci	170	M54 B30 (306S3)	06/00 →		06
	330 i	170	M54 B30 (306S3)	06/00 → 02/05		06
	330 i M Sport	170	M54 B30 (306S3)	06/00 → 02/05		06
	330 xi	170	M54 B30 (306S3)	06/00 → 02/05		06
3 (E90)	316 i	85	N45 B16 A	02/06 → 12/11		04
	320 si	127	N45 B20 A	05/06 → 12/11		04
5 (E34)	518 i	83	M40 B18 (184E1)	08/89 → 09/95	→ 10/92	04
		85	M43 B18 (184E2)	08/89 → 09/95		04
	520 i	110	M50 B20 (206S1)	11/91 → 01/97		06
		110	M50 B20 (206S2)	11/91 → 01/97		06
	520 i 24V	110	M50 B20 (206S2)	09/89 → 09/95		06
		110	M50 B20 (206S1)	09/89 → 09/95		06
	525 i	141	M50 B25 (256S2)	11/91 → 01/97		06
		141	M50 B25 (256S1)	11/91 → 01/97		06
	525 i 24V	141	M50 B25 (256S2)	09/89 → 09/95		06
	525 ix	141	M50 B25 (256S2)	02/92 → 01/97		06
		141	M50 B25 (256S1)	02/92 → 01/97		06
	525 iX 24V	141	M50 B25 (256S1)	10/91 → 09/95		06
		141	M50 B25 (256S2)	10/91 → 09/95		06
	525iT	141	M50 B25 (256S2)	11/91 → 01/97		06
		141	M50 B25 (256S1)	11/91 → 01/97		06
	530 i V8	160	M60 B30 (308S1)	09/92 → 09/95		08
	540 i	210	M60 B40 (408S1)	09/93 → 01/97		08
	540 i V8	210	M60 B40 (408S1)	09/92 → 09/95		08
5 (E39)	520 i	100	M52 B20 (206S3)	04/99 → 06/03		06
		110	M52 B20 (206S3)	01/96 → 09/00		06
		125	M54 B22 (226S1)	09/00 → 06/03		06
	523 i	125	M52 B25 (256S3)	11/95 → 09/00		06
	525 i	141	M54 B25 (256S5)	09/00 → 06/03		06
	528 i	142	M52 B28 (286S1)	11/95 → 09/00		06
		142	M52 B28 (286S2)	11/95 → 09/00		06
	530 i	170	M54 B30 (306S3)	09/00 → 06/03		06
	535 i	173	M62 B35 (358S1)	04/96 → 03/99		08
		173	M62 B35 (358S2)	04/96 → 03/99		08
		180	M62 B35 (358S2)	04/99 → 06/03		08
	540 i	210	M62 B44 (448S2)	04/96 → 06/03		08
		210	M62 B44 (448S1)	04/96 → 06/03		08
	M5	294	S62 B50 (508S1)	10/98 → 06/03		08

MAGNETI MARELLI

D6KMR

		kW				QTY
BMW						
5 (E60)	520 i	125	M54 B22 (226S1)	07/03 → 03/10		06
	525 i	141	M54 B25 (256S5)	09/03 → 03/10		06
	530 i	170	M54 B30 (306S3)	07/03 → 03/10		06
	545 i	245	N62 B44 A	09/03 → 03/10		08
5 (E61)	525 i	141	M54 B25 (256S5)	06/04 →		06
	545 i	245	N62 B44 A	06/04 →		08
6 (E63)	645 Ci	245	N62 B44 A	01/04 →		08
6 (E64)	645 Ci	245	N62 B44 A	04/04 →		08
7 (E32)	730 i,iL V8	160	M60 B30 (308S1)	04/92 → 09/94		08
	740 i,iL V8	210	M60 B40 (408S1)	04/92 → 09/94		08
7 (E38)	728 i, iL	142	M52 B28 (286S1)	08/95 → 11/01		06
		142	M52 B28 (286S2)	08/95 → 11/01		06
	728i X	142	M52 B28 (286S1)	11/95 → 09/01		06
	730 i, iL	155	M60 B30 (308S1)	10/94 → 11/01		08
		160	M60 B30 (308S1)	10/94 → 11/01		08
	735 i, iL	173	M62 B35 (358S1)	01/96 → 11/01		08
	740 i, iL	210	M60 B40 (408S1)	10/94 → 11/01		08
		210	M62 B44 (448S2)	01/96 → 11/01		08
		210	M62 B44 (448S1)	01/96 → 11/01		08
7 (E65, E66, E67)	730 i, Li	170	M54 B30 (306S3)	03/03 →		06
	735 i, Li	200	N62 B36 A	11/01 →		08
	745 i, Li	245	N62 B44 A	11/01 →		08
	760 i, Li	327	N73 B60 A	01/03 →	→ 10/08	12
8 (E31)	840 Ci	210	M62 B44 (448S1)	01/96 → 12/99		08
	840 i	210	M60 B40 (408S1)	02/93 → 02/96		08
	840 Ci	210	M60 B40 (408S1)	02/93 → 02/96		08
	850 CSi	280	S70 B56 (56121)	04/93 → 12/96		12
X3 (E83)	2.5 i	141	M54 B25 (256S5)	01/04 →		06
	3.0 i xDrive	170	M54 B30 (306S3)	01/04 →		06
X5 (E53)	3.0 i	163	M54 B30 (306S3)	05/00 → 12/06		06
		170	M54 B30 (306S3)	05/00 → 12/06		06
	4.4 i	210	M62 B44 (448S2)	05/00 → 12/03	→ 08/03	08
		235	N62 B44	12/03 → 09/06		08
		235	N62 B44 A	12/03 → 09/06		08
	4.6 is	255	M62 B46 (468S1)	02/02 → 12/03		08
Z3 (E36)	1.8 i	85	M43 B18 (184E2)	10/95 → 10/98		04
	1.9 i	85	M43 B19 (194E1)	01/99 → 01/03		04
		87	M43 B19 (194E1)	07/98 → 01/03		04
		103	M44 B19 (194S1)	10/95 → 03/99		04
	2.0 i	110	M52 B20 (206S4)	04/99 → 01/03	→ 10/00	06
	2.2 i	125	M54 B22 (226S1)	08/00 → 01/03		06
	2.8 i	141	M52 B28 (286S1)	04/97 → 06/00		06
	3.0 i	170	M54 B30 (306S3)	06/00 → 01/03		06

D6KMR

		kW				QTY
BMW						
Z4 (E85)	2.2 i	125	M54 B22 (226S1)	10/03 →		06
	2.5 i	141	M54 B25 (256S5)	02/03 →		06
	3.0 i	170	M54 B30 (306S3)	02/03 →		06
Z8 (E52)	4.9	294	S62 B50 (508S1)	06/00 → 06/03		08
CHEVROLET						
CAPTIVA	2.4	100	Z 24 SED	06/06 →	→ 02/11	04
	2.4 4WD	100	Z 24 SED	06/06 →	→ 02/11	04
ESTATE	1.8	89	F18D3	08/05 →		04
		90	T18SED	03/05 →		04
EVANDA	2.0	96	X 20 SED	03/05 →	→ 06/07	04
LACETTI	1.8	90	T18SED	03/05 →		04
NUBIRA	1.8	89	F18D3	08/05 →		04
		90	T18SED	03/05 →		04
OPTRA	1.8	90	T18SED	08/03 → 12/08		04
		90	T18SED	03/05 →		04
REZZO	2.0	89	T20SED	03/05 →	→ 06/08	04
		90	T20SED	08/05 →	→ 06/08	04
TACUMA	2.0	89	T20SED	03/05 →	→ 06/08	04
		90	T20SED	08/05 →	→ 06/08	04
CITROËN						
AX	10	37	CDZ (TU9M)	02/87 → 12/98		04
	11 4x4	40	H1A	06/91 → 07/92		04
BERLINGO (MF)	1.1 i (MFHDZ, MFHFX)	44	HDZ (TU1M)	07/96 →		04
		44	HFX (TU1JP)	07/96 →		04
	1.8 i (MFLFX)	66	LFX (XU7JB)	05/97 →		04
	1.8 i 4WD (MFLFX)	66	LFX (XU7JB)	04/97 →		04
BX	11	40	HDZ (TU1M)	10/88 → 06/92		04
	14	55	KDY (TU3M)	01/89 → 02/93		04
		55	KDZ (TU3M/Z)	01/89 → 02/93		04
C15	1.1 i	44	HDZ (TU1M)	07/88 → 12/96		04
CHANSON	1.0 X	33	CDZ (TU9M)	05/96 → 11/98		04
		37	CDZ (TU9M)	05/98 → 06/03		04
	1.1 X,SX	40	HDZ (TU1M)	05/96 → 09/03		04
		44	HFX (TU1JP)	05/96 → 09/03		04
		44	HDZ (TU1M)	05/96 → 09/03		04
	1.6	66	NFZ (TU5JP)	02/96 → 06/03		04
	1.6 VTL,VTR	65	NFZ (TU5JP)	05/96 → 06/03		04
	1.6 VTS	87	NFX (TU5JP4)	06/96 → 09/03		04
EVASION	1.8	73	LFZ (XU7JP)	05/97 → 07/02		04
	2.0 16V	97	RFV (XU10J4R)	05/98 → 04/00		04
JUMPER	2.0	80	RFW (XU10J2U)	02/94 → 04/02		04
RELAY	2.0	80	RFW (XU10J2U)	02/94 → 04/02		04

MAGNETI MARELLI

D6KMR

		kW				QTY
CITROËN						
SAXO	1.0 X	33	CDZ (TU9M)	05/96 → 11/98		04
		37	CDZ (TU9M)	05/98 → 06/03		04
	1.1 X,SX	40	HDZ (TU1M)	05/96 → 09/03		04
		44	HDZ (TU1M)	05/96 → 09/03		04
		44	HFX (TU1JP)	05/96 → 09/03		04
	1.6	88	NFX (TU5JP4)	02/96 → 04/04		04
		66	NFZ (TU5JP)	02/96 → 06/03		04
	1.6 VTL,VTR	65	NFZ (TU5JP)	05/96 → 06/03		04
	1.6 VTS	87	NFX (TU5JP4)	06/96 → 09/03		04
SYNERGIE	1.8	73	LFZ (XU7JP)	05/97 → 07/02		04
	2.0 16V	97	RFV (XU10J4R)	05/98 → 04/00		04
XANTIA (X1)	1.6 i	65	BFZ (XU5JP)	03/93 → 01/98		04
	1.8 i	66	LFX (XU7JB)	04/97 → 01/98		04
		74	LFZ (XU7JP)	03/93 → 01/98		04
	1.8 i 16V	81	LFY (XU7JP4)	06/95 → 01/98		04
	2.0 i	89	RFX (XU10J2C)	03/93 → 01/98		04
	2.0 i 16V	97	RFV (XU10J4R)	06/95 → 01/98		04
	3.0 i 24V	140	XFZ (ES9J4)	01/97 → 01/98		06
XANTIA (X2)	3.0 V6	140	XFZ (ES9J4)	01/98 → 04/03		06
XANTIA Break (X1)	2.0 i	89	RFX (XU10J2C)	06/95 → 01/98		04
XM	2.0 i 16V	97	RFV (XU10J4R)	05/94 → 10/00	07/95 →	04
	3.0 V6	140	XFZ (ES9J4)	04/97 → 10/00		06
XSARA	1.4 i	55	KFX (TU3JP)	03/98 → 03/05		04
		55	KFW (TU3JP)	03/98 → 03/05		04
	1.8 i	66	LFX (XU7JB)	04/97 → 09/00		04
	1.8 i 16V	81	LFY (XU7JP4)	04/97 → 09/00		04
	1.8 i Aut.	74	LFZ (XU7JP)	04/97 → 09/00		04
	1.8 i GLX 16V	81	LFY (XU7JP4)	04/97 → 09/00		04
	2.0	97	RFV (XU10J4R)	08/98 → 08/00		04
	2.0 16V	97	RFV (XU10J4R)	07/98 → 09/00		04
	2.0 GLX 16V	97	RFV (XU10J4R)	07/98 → 09/00		04
ZX (N2)	1.1	44	HDZ (TU1M)	03/91 → 06/97		04
	1.4 i	55	KDX (TU3M/Z)	03/91 → 06/97		04
		55	KFX (TU3JP)	03/91 → 06/97		04
	1.6	66	BFZ (XU5JP)	07/94 → 10/97		04
		66	BDY (XU5M)	07/94 → 10/97		04
	1.8	82	LFY (XU7JP4)	04/96 → 10/97		04
	1.8 i	74	LFZ (XU7JP)	07/94 → 06/97		04
	1.8 i 16V	81	LFY (XU7JP4)	01/96 → 06/97		04
	2.0	90	RFX (XU10J2C)	07/94 → 10/97		04
	2.0 i	89	RFX (XU10J2C)	07/94 → 06/97		04

D6KMR

		kW				QTY
DACIA						
LOGAN	1.4 MPI LPG (LS0C)	55	K7J 710	02/06 →		04
		55	K7J 714	02/06 →		04
	1.6 MPI 85	62	K7M 800	05/10 →		04
LOGAN EXPRESS	1.6 MPI 85	62	K7M 800	05/10 →		04
LOGAN MCV	1.6 Bifuel	64	K7M 710	11/08 →		04
	1.6 MPI 85	62	K7M 800	05/10 →		04
SANDERO	1.4	55	K7J 710	06/08 →		04
	1.4 MPI LPG	53	K7J 714	01/09 →		04
	1.6	64	K7M 710	06/08 →		04
	1.6 MPI 85	62	K7M 800	05/10 →		04
DAEWOO						
EVANDA	2.0	96	X 20 SED	08/02 →	→ 05/05	04
		96	L88	08/02 →	→ 05/05	04
KONDOR	2.0 16V	93	T20SED	07/00 → 04/04	→ 01/03	04
		98	X 20 SED	06/97 → 12/02		04
	2.2 16V	100	T22SED	04/99 → 12/02		04
LACETTI	1.4	70	F14D3	02/04 →		04
	1.8	90	T18SED	02/04 →		04
LEGANZA	2.0 16V	93	T20SED	07/00 → 04/04	→ 01/03	04
		98	X 20 SED	06/97 → 12/02		04
	2.2 16V	100	T22SED	04/99 → 12/02		04
NUBIRA	1.8	90	T18SED	07/03 →	→ 07/05	04
	2.0 16V	93	T20SED	12/00 →	→ 09/04	04
		98	Z20L	05/97 →	→ 06/03	04
		98	X 20 SED	05/97 →	→ 06/03	04
ORION	2.0 16V	93	T20SED	12/00 →	→ 09/04	04
		98	Z20L	05/97 →	→ 06/03	04
		98	X 20 SED	05/97 →	→ 06/03	04
REZZO	2.0	89	X 20 SED	09/01 →	→ 07/05	04
		94	T20SED	09/00 →	→ 07/05	04
TACUMA	2.0	89	X 20 SED	09/01 →	→ 07/05	04
		94	T20SED	09/00 →	→ 07/05	04
DAIHATSU						
TERIOS	0.7	44	EF-DEM	09/00 →		03
	0.7 4WD	44	EF-DEM	05/97 → 08/00		03
FIAT						
ULYSSE (220_)	2.0 (220.AC5)	89	RFU (XU10J2C)	06/94 → 08/02	→ 08/00	04
	2.0 16V	97	RFV	05/98 → 09/00		04
	2.0 Turbo (220.AD5)	108	RGX (XU10J2CTE)	06/94 → 08/02		04
FORD						
GALAXY	2.8 i V6	128	AMY	11/95 → 04/00		06
	2.8 i V6 4x4	128	AAA	04/96 → 04/00		06
LANCIA						
ZETA (22_)	2.0 Turbo (220AD5, 220CD5)	108	RGX (XU10J2TE)	05/95 → 09/02		04

MAGNETI MARELLI

D6KMR

		kW				QTY
LAND ROVER						
RANGE ROVER III	4.4 4x4	210	M62 B44	03/02 → 08/12		08
MERCEDES-BENZ						
V CLASS (638/2)	V 280 (638.244, 638.294)	128	M 104.900	08/97 → 07/03		06
MINI						
MINI (R50, R53)	Cooper	85	W10 B16 A	06/01 → 09/06		04
	Cooper S	120	W11 B16 A	03/02 → 09/06		04
		125	W11 B16 A	07/04 → 09/06		04
	One	55	W10 B14 A	04/03 → 09/06		04
		66	W10 B16 A	06/01 → 09/06		04
MINI Cabriolet (R52)	Cooper	85	W10 B16 A	07/04 → 11/07		04
	Cooper S	120	W11 B16 A	07/04 → 11/07		04
		125	W11 B16 A	07/04 → 11/07		04
	One	66	W10 B16 A	07/04 → 11/07		04
OPEL						
AGILA (A)	1.0 12V	43	Z 10 XE	09/00 → 12/07		03
	1.2 16V	55	Z 12 XE	09/00 → 12/07		04
ANTARA	2.4	103	Z 24 XE	09/08 →	→ 02/11	04
		104	Z 24 XED	05/06 →		04
	2.4 4x4	103	Z 24 XE	01/07 →	→ 02/11	04
ASTRA F	1.4	55	14 NV	09/91 → 09/93		04
		60	14 SE	09/92 → 09/98		04
	1.4 i	44	X 14 NZ	01/98 → 08/02		04
	1.4 i 16V	66	X 14 XE	02/96 → 09/98		04
	1.6	55	16 NZR	09/95 → 09/98		04
		55	16 LZ2	09/95 → 09/98		04
	1.6 i	52	X 16 SZ	05/93 → 07/96		04
		55	X 16 SZR	03/92 → 09/98		04
		55	C 16 NZ	03/92 → 09/98		04
	1.6 i 16V	74	X 16 XEL	08/94 → 09/98		04
	1.8 i	66	C 18 NZ	03/92 → 09/98		04
	1.8 i 16V	82	18 SE	09/95 → 09/96		04
		85	C 18 XEL	11/94 → 09/98		04
		85	X 18 XE	11/94 → 09/98		04
		92	C 18 XE	06/93 → 10/94		04
	2.0 GSI 16V	110	C 20 XE	09/91 → 01/98		04
	2.0 i	85	C 20 NE	03/92 → 09/98		04
	2.0 i 16V	100	X 20 XEV	02/95 → 09/98		04

D6KMR

		kW				QTY
OPEL						
ASTRA G	1.2 16V	48	X 12 XE	02/98 → 09/00		04
		55	Z 12 XE	09/00 → 01/05		04
	1.4	66	Z 14 XEP	09/07 → 12/09		04
	1.4 16V	66	X 14 XE	02/98 → 01/05		04
	1.6	55	X 16 SZR	02/98 → 09/00		04
		62	Z 16 SE	09/00 → 01/05		04
		76	Z 16 XEP	12/02 → 12/09		04
	1.6 16V	74	X 16 XEL	02/98 → 01/05		04
		74	Z 16 XE	02/98 → 01/05		04
		74	C 16 SEL	02/98 → 01/05		04
		76	Z 16 XEP	03/00 → 05/05		04
	1.8 16V	85	X 18 XE1	02/98 → 09/00		04
		92	Z 18 XE	09/00 → 01/05		04
	2.0 16V	100	C 20 SEL	02/98 → 01/05		04
		100	X 20 XEV	02/98 → 01/05		04
	2.0 16V OPC	118	X 20 XER	11/99 → 09/02		04
	2.0 16V Turbo	147	Z 20 LET	11/02 → 10/05		04
		140	Z 20 LET	09/00 → 08/01		04
	2.0 OPC	141	Z 20 LET	09/02 → 01/05		04
		147	Z 20 LET	11/02 → 01/05		04
CALIBRA A	2.0 i	85	C 20 NE	06/90 → 07/97	07/93 →	04
	2.0 i 16V	100	X 20 XEV	02/94 → 07/97		04
		110	C 20 XE	06/90 → 02/94		04
	2.0 i 16V 4x4	100	X 20 XEV	02/94 → 07/97		04
		110	C 20 XE	06/90 → 02/94		04
	2.0 i 4x4	85	C 20 NE	06/90 → 07/97	07/93 →	04
	2.5 i V6	125	X 25 XE	04/93 → 07/97		06
		125	C 25 XE	04/93 → 07/97		06
COMBO	1.2	33	X 12 SZ	07/94 → 10/01		04
	1.4	44	X 14 SZ	07/94 → 10/01		04
		44	C 14 NZ	07/94 → 10/01		04
		60	C 14 SE	07/94 → 10/01		04
	1.4 16V	66	X 14 XE	08/99 → 10/01		04
	1.6	64	Z 16 SE	10/01 →		04
CORSA A	1.2 i	33	C 12 NZ	09/89 → 03/93		04
	1.4 i	44	C 14 NZ	01/90 → 03/93		04
	1.4 Si	60	C 14 SE	09/91 → 03/93		04

MAGNETI MARELLI

D6KMR

		kW				QTY
OPEL						
CORSA B	1.0 i 12V	40	X 10 XE	11/96 → 09/00		03
	1.2 i	33	12 NZ	03/93 → 09/00		04
		33	C 12 NZ	03/93 → 09/00		04
		33	X 12 SZ	03/93 → 09/00		04
	1.2 i 16V	48	X 12 XE	03/98 → 09/00		04
	1.4 i	40	X 14 SZ	03/93 → 09/00	08/95 →	04
		40	C 14 NZ	03/93 → 09/00	08/95 →	04
		44	C 14 NZ	03/93 → 09/00	08/95 →	04
	1.4 i 16V	66	X 14 XE	01/99 →		04
		63	C 14 SEL	08/97 → 09/00		04
		66	X 14 XE	09/94 → 09/00		04
	1.4 Si	60	C 14 SE	03/93 → 09/00		04
	1.6 GSI 16V	80	C 16 XE	03/93 → 09/00		04
	1.6 i 16V	74	C 16 SEL	08/97 → 09/00		04
		78	X 16 XE	09/94 → 09/00		04
CORSA C	1.0	43	Z 10 XE	09/00 → 06/03		03
	1.2	55	Z 12 XE	09/00 → 12/09		04
	1.4	66	Z 14 XE	09/00 → 12/09		04
	1.8	92	Z 18 XE	09/00 → 12/09		04
FRONTERA A	2.2 i (54MWL4)	100	X 22 XE	03/95 → 10/98		04
FRONTERA A Sport	2.0 i (52SUD2, 55SUD2)	85	C 20 NE	03/92 → 10/98		04
		85	X 20 SE	03/92 → 10/98		04
MERIVA	1.6	64	Z 16 SE	05/03 → 05/10		04
	1.6 16V	74	Z 16 XE	05/03 → 01/06		04
	1.8	92	Z 18 XE	05/03 → 05/10		04
OMEGA A	2.0	73	C 20 NEJ	09/90 → 03/94		04
	3.0 24V (3000)	147	C 30 SEJ	09/89 → 03/94		06
		150	C 30 SE	09/89 → 03/94		06
OMEGA B	2.0	85	20 SE	03/94 → 12/00		04
		85	X 20 SE	03/94 → 09/99		04
		90	XF 20 E	05/94 → 05/99		04
	2.0 16V	100	X 20 XEV	03/94 → 09/99		04
		106	Z 22 XE	09/99 → 07/03		04
		106	Y 22 XE	09/99 → 07/03		04
SENATOR B	3.0 24V	150	C 30 SE	09/89 → 09/93		06
SIGNUM	1.8	90	Z 18 XE	05/03 →		04
	3.2 V6	155	Z 32 SE	05/03 →	→ 09/05	06
SINTRA	2.2 i 16V	104	X 22 XE	11/96 → 04/99		04
	3.0 i 24V	148	X 30 XE	11/96 → 04/99		06
SPEEDSTER	2.0 Turbo	147	Z 20 LET	04/03 →		04
TIGRA	1.4 16V	63	X 14 XE	08/97 → 12/00		04
		66	X 14 XE	07/94 → 12/00		04
	1.6 16V	74	C 16 SEL	08/97 → 08/98		04
		78	X 16 XE	07/94 → 08/98		04

D6KMR

		kW				QTY
OPEL						
VECTRA A	1.6 i	52	X 16 SZ	09/93 → 11/95		04
		55	C 16 NZ	09/88 → 11/95	09/93 →	04
		55	E 16 NZ	09/88 → 11/95	09/93 →	04
		55	C 16 NZ2	09/88 → 11/95	09/93 →	04
		55	C 16 LZ2	09/93 → 11/95		04
		55	16 LZ2	09/93 → 11/95		04
	2.0 i	85	20 NE	09/88 → 10/90		04
	2.0 i 16V	100	X 20 XEV	06/94 → 11/95		04
	2.0 i 16V 4x4	100	X 20 XEV	06/94 → 11/95		04
	2.0 i 16V Cat	110	C 20 XE	02/90 → 11/95		04
	2.0 i 4x4	85	20 NE	01/89 → 10/90		04
	2.0 i Cat	85	C 20 NE	09/88 → 11/95		04
	2.0 i Cat 4x4	85	C 20 NE	01/89 → 11/95		04
	2.5 V6	125	C 25 XE	02/93 → 11/95		06
	2000/GT 16V Cat	110	C 20 XE	02/90 → 11/95		04
	2000/GT 16V Cat 4x4	110	C 20 XE	02/90 → 11/95		04
VECTRA B	1.6 GL	60	16 SV	09/95 → 08/96		04
	1.6 i	55	16 LZ2	10/95 → 04/02		04
		55	X 16 SZR	10/95 → 04/02		04
	1.6 i 16V	74	Y 16 XE	10/95 → 04/02		04
		74	Z 16 XE	10/95 → 04/02		04
		74	X 16 XEL	10/95 → 04/02		04
	1.8 i 16V	85	X 18 XE1	10/95 → 09/00		04
		85	Z 18 XEL	10/95 → 09/00		04
		85	X 18 XE	10/95 → 09/00		04
		92	Z 18 XE	09/00 → 04/02		04
	2.0 i	82	20 NEJ	10/95 → 04/02		04
	2.0 i 16V	100	X 20 XEV	10/95 → 09/00		04
		100	C 20 SEL	10/95 → 09/00		04
	2.5	144	X 25 XE	10/99 → 06/00		06
	2.5 i V6	125	X 25 XE	10/95 → 09/00		06
	2.6 i V6	125	Y 26 SE	09/00 → 04/02		06
	i 500 2.5	143	X 25 XE	05/98 → 09/00		06
VECTRA C	1.6	77	Z 16 XEP	01/06 →	→ 02/09	04
	1.6 16V	74	Z 16 XE	06/04 →	10/05 → 02/09	04
	1.8	81	Z 18 XEL	04/02 →	→ 09/05	04
	1.8 16V	90	Z 18 XE	04/02 →	→ 02/09	04
	3.2 V6	155	Z 32 SE	08/02 →	→ 09/05	06

MAGNETI MARELLI

D6KMR

		kW				QTY
OPEL						
VITA B	1.0 i 12V	40	X 10 XE	11/96 → 09/00		03
	1.2 i	33	12 NZ	03/93 → 09/00		04
		33	C 12 NZ	03/93 → 09/00		04
		33	X 12 SZ	03/93 → 09/00		04
	1.2 i 16V	48	X 12 XE	03/98 → 09/00		04
	1.4 i	40	X 14 SZ	03/93 → 09/00	08/95 →	04
		40	C 14 NZ	03/93 → 09/00	08/95 →	04
		44	X 14 SZ	03/93 → 09/00	08/95 →	04
		44	C 14 NZ	03/93 → 09/00	08/95 →	04
	1.4 i 16V	63	C 14 SEL	08/97 → 09/00		04
		66	X 14 XE	09/94 → 09/00		04
	1.4 Si	60	C 14 SE	03/93 → 09/00		04
	1.6 GSI 16V	80	C 16 XE	03/93 → 09/00		04
	1.6 i 16V	74	C 16 SEL	08/97 → 09/00		04
	1.6 i 16V	78	X 16 XE	09/94 → 09/00		04
VITA C	1.0	43	Z 10 XE	09/00 → 06/03		03
	1.2	55	Z 12 XE	09/00 → 12/09		04
	1.4	66	Z 14 XE	09/00 → 12/09		04
	1.8	92	Z 18 XE	09/00 → 12/09		04
VIVARO	2.0 ECOTEC	86	F4R 820	08/06 →		04
ZAFIRA A	1.6 16V	74	X 16 XEL	04/99 → 06/05		04
		74	Z 16 XE	04/99 → 06/05		04
	1.8 16V	85	X 18 XE1	04/99 → 09/00		04
		92	Z 18 XE	09/00 → 06/05		04
	2.0 OPC	141	Z 20 LET	09/01 → 06/05		04
		147	Z 20 LET	11/02 → 06/05		04
		147	Z 20 LER	11/02 → 06/05		04
PEUGEOT						
106	1.1	44	HDZ (TU1M)	09/91 → 04/96	07/95 →	04
	1.4	55	KDY (TU3M)	09/91 → 04/96	03/95 →	04
		55	KDX (TU3MC)	09/91 → 04/96	03/95 →	04
106 II	1.0 i	33	CDY (TU9M)	05/96 →		04
		37	CDZ (TU9M)	01/97 →	→ 03/01	04
	1.0 i KID	33	CDY (TU9M)	05/96 →		04
	1.0 i Passion	37	CDZ (TU9M)	01/97 →	→ 03/01	04
	1.1 i	40	HDY (TU1M)	01/97 →	03/98 → 03/01	04
		44	HDZ (TU1M)	05/96 →		04
		44	HFX (TU1JP)	05/96 →		04
	1.4 i	55	KFW (TU3JP)	05/96 →	→ 07/04	04
		55	KFX (TU3JP)	05/96 →	→ 07/04	04

D6KMR

		kW				QTY
PEUGEOT						
205 II	1.4	55	KDX (TU3MC)	08/90 → 07/98	→ 05/97	04
		55	KDY (TU3M)	08/90 → 07/98	→ 05/97	04
		55	TU32	08/90 → 07/98	→ 05/97	04
	1.4 XSI	55	TU32	08/90 → 07/98	→ 05/97	04
		55	KDX (TU3MC)	08/90 → 07/98	→ 05/97	04
		55	KDY (TU3M)	08/90 → 07/98	→ 05/97	04
306	1.1	44	HDZ (TU1M)	05/93 → 05/01	07/95 →	04
	1.4 SL	55	KFW (TU3JP)	06/94 → 05/01	07/95 →	04
		55	KDX (TU3MC)	06/94 → 05/01	07/95 →	04
		55	KFX (TU3JP)	06/94 → 05/01	07/95 →	04
	1.8 16V	81	LFY (XU7JP4)	03/97 → 05/01		04
	1.8 Rallye 16V	81	LFY (XU7JP4)	03/97 → 05/01		04
	2.0	97	RFV (XU10J4R)	03/97 → 05/01		04
	2.0 16V	97	RFV (XU10J4R)	03/97 → 05/01		04
		99	RFV (XU10J4R)	03/97 → 06/00		04
	2.0 ST	89	RFX (XU10J2)	07/94 → 05/01		04
	2.0 XSi	89	RFX (XU10J2)	05/93 → 05/01		04
306 Break	1.4	55	KFX (TU3JP)	03/97 → 04/02		04
		55	KFW (TU3JP)	03/97 → 04/02		04
	1.6	72	NFT (TU5JP)	10/00 → 04/02		04
	1.8	74	LFZ (XU7JP)	03/97 → 04/02		04
	1.8 16V	81	LFY (XU7JP4)	03/97 → 04/02		04
306 Cabriolet	1.8	74	LFZ (XU7JP)	03/94 → 04/02	07/95 →	04
	1.8 16V	81	LFY (XU7JP4)	07/00 → 04/02		04
	2.0	89	RFX (XU10J2)	03/94 → 04/02	01/00 →	04
405 II	2.0 T 16 X4	144	RGZ (XU10J4TE/Z)	08/92 → 10/95		04
406	1.6	65	BFZ (XU5JP)	11/95 → 05/04	→ 03/99	04
	1.8	66	LFX (XU7JB)	05/97 → 05/04	→ 03/99	04
	1.8 16V	81	LFY (XU7JP4)	11/95 → 10/00		04
	2.0	104	RGY (XU10J2TE)	11/96 → 03/99		04
	2.0 Turbo	108	RGX (XU10J2TE)	04/96 → 05/04		04
	3.0 24V	140	XFZ (ES9J4)	10/96 → 05/04		06
	3.0 24V	143	XFZ (ES9J4)	01/98 → 06/99		06
406 Coupé	2.2	116	3FZ (EW12J4)	03/02 → 12/04		04
	3.0 24V	143	XFZ (ES9J4)	05/97 →		06
	3.0 V6 24V	140	XFZ (ES9J4)	03/97 → 12/04		06
605	2.0 16V	97	RFV (XU10J4R)	07/94 → 09/99		04
	2.0 Turbo	104	RGY (XU10J2TE)	07/94 → 09/99		04
		108	RGX (XU10J2TE)	07/91 → 09/99		04
	3.0 V6	140	XFZ (ES9J4)	04/97 → 09/99		06
806	1.8	73	LFW (XU7JP)	07/95 → 08/02		04
	2.0	89	RFU (XU10J2)	06/94 → 08/02		04
	2.0 16V	97	RFV (XU10J4R)	05/98 → 09/00		04
	2.0 S Turbo	108	RGX (XU10J2TE)	06/94 → 08/02		04
	2.0 Turbo	108	RGX (XU10J2TE)	06/94 → 08/02		04

MAGNETI MARELLI

D6KMR

		kW				QTY
PEUGEOT						
BOXER	2.0 i 4x4	80	RFW (XU10J2)	08/96 → 04/02		04
GRAND RAPID	1.1	44	HDZ (TU1M)	06/96 →		04
		44	HFX (TU1JP)	06/96 →		04
	1.8	66	LFX (XU7JB)	05/97 →	→ 08/00	04
PARTNER	1.1	44	HDZ (TU1M)	06/96 →		04
		44	HFX (TU1JP)	06/96 →		04
	1.4	55	TU32	06/96 →		04
	1.8	66	LFX (XU7JB)	05/97 →	→ 08/00	04
RANCH Furgonato	1.1	44	HDZ (TU1M)	06/96 →		04
	1.4	55	TU32	06/96 →		04
		55	KFX (TU3JP)	06/96 →		04
RANCH MPV / Space wagon	1.1	44	HFX (TU1JP)	06/96 →		04
	1.8	66	LFX (XU7JB)	05/97 →	→ 08/00	04
PORSCHE						
911 (996)	3.4 Carrera	221	M 96.01	09/97 → 09/01		06
		221	M 96.04	09/97 → 09/01		06
		235	M 96.02	05/01 → 08/05		06
	3.4 Carrera 4	221	M 96.02	02/98 → 09/01		06
		221	M 96.04	09/97 → 09/01		06
		221	M 96.01	09/97 → 09/01		06
		235	M 96.02	05/01 → 08/05		06
RENAULT						
CLIO I	1.4	55	K7J 700	08/00 →		04
	1.4 16V	72	K4J 712	08/00 →		04
	1.6	66	K7M 746	03/98 →		04
CLIO II	1.1 (SB0A, SB0F, SB1K, SB2D)	43	D7F 746	09/98 →		04
		43	D7F 720	09/98 →		04
		43	D7F 726	09/98 →		04
	1.2 (BB0A, BB0F, BB10, BB1K, BB28, BB2D, BB2H, CB0A...)	43	D7F 764	09/98 →		04
		43	D7F 726	09/98 →		04
		43	D7F 746	09/98 →		04
		43	D7F 766	09/98 →		04
		43	D7F 722	09/98 →		04
		43	D7F 710	09/98 →		04
		43	D7F 720	09/98 →		04
	1.2 (BB0A, CB0A)	44	D7F 722	03/99 → 05/01		04
	1.2 (SB0A, SB0F, SB10)	44	D7F 722	03/99 → 10/03		04
		44	D7F 726	03/99 → 10/03		04
		44	D7F 746	03/99 → 10/03		04
	1.2 LPG	43	D7F 764	09/98 → 06/09	→ 10/07	04
		43	D7F 766	09/98 → 06/09	→ 10/07	04
	1.4 (B/CB0C)	55	E7J 780	09/98 → 05/05		04
		55	K7J 700	09/98 → 05/05		04
		55	E7J 634	09/98 → 05/05		04

D6KMR

		kW				QTY
RENAULT						
CLIO II	1.4 16V (B/CB0L)	70	K4J 712	10/99 → 09/04		04
		70	K4J 713	10/99 → 09/04		04
	1.6 (B/CB0D)	66	K7M 746	09/98 → 05/05		04
		66	K7M 744	09/98 → 05/05		04
		66	K7M 745	09/98 → 05/05		04
	1.6 16V (BB01, BB0H, BB0T, BB14, BB1D, BB1R, BB2KL...)	79	K4M 708	09/98 →		04
		79	K4M 740	09/98 →		04
		79	K4M 742	09/98 →		04
		79	K4M 743	09/98 →		04
		79	K4M 744	09/98 →		04
		79	K4M 745	09/98 →		04
		79	K4M 748	09/98 →		04
	1.6 RN/RT (B/CB0D)	66	K7M 745	09/98 → 05/05		04
		66	K7M 746	09/98 → 05/05		04
		66	K7M 744	09/98 → 05/05		04
ESPACE III	3.0 (JE0D)	123	Z7X 775	11/96 → 10/98		06
KANGOO	1.2 (FC01, FC0A, FC0F)	43	D7F 720	08/97 →		04
		43	D7F 746	08/97 →		04
		43	D7F 722	08/97 →		04
		43	D7F 744	08/97 →		04
		43	D7F 726	08/97 →		04
		43	D7F 710	08/97 →		04
	1.2 (FC1A)	44	D7F 764	07/98 → 07/01		04
		44	D7F 766	07/98 → 07/01		04
	1.2 (KC0A, KC0K, KC0F, KC01)	43	D7F 744	08/97 →		04
		43	D7F 726	08/97 →		04
		43	D7F 722	08/97 →		04
		43	D7F 710	08/97 →		04
		43	D7F 746	08/97 →		04
		43	D7F 720	08/97 →		04
	1.4 (KC0C, KC0H, KC0B, KC0M)	55	E7J 634	08/97 →		04
		55	K7J 700	08/97 →		04
		55	K7J 701	08/97 →		04
		55	E7J 780	08/97 →		04
		55	E7J 635	08/97 →		04
	1.6	66	K7M 746	09/99 → 06/01		04
	RL 1.2 (FC01, FC0A, FC0F)	43	D7F 722	08/97 →		04
		43	D7F 746	08/97 →		04
		43	D7F 744	08/97 →		04
		43	D7F 726	08/97 →		04
		43	D7F 710	08/97 →		04
		43	D7F 720	08/97 →		04

MAGNETI MARELLI

D6KMR

		kW				QTY
RENAULT						
LAGUNA I	1.6 16V (B568, B561)	79	K4M 724	11/97 → 03/01		04
		79	K4M 720	11/97 → 03/01		04
	1.6 16V (K568)	79	K4M 724	11/97 → 03/01		04
		79	K4M 720	11/97 → 03/01		04
	1.8 16V (B563, B564)	88	F4P 770	04/98 → 03/01		04
		88	F4P 760	04/98 → 03/01		04
	3.0 (K56R, K565)	123	Z7X 765	02/96 → 03/01		06
	3.0 24V (B56V)	140	L7X 700	03/97 → 03/01		06
	3.0 V6 24V (B56V)	140	L7X 701	03/97 → 03/01		06
MEGANE I	1.6 e (EA0F)	66	K7M 702	10/96 → 03/99		04
		66	K7M 703	10/96 → 03/99		04
	1.6 e (LA0F, LA0S)	66	K7M 790	09/96 → 03/99		04
		66	K7M 703	09/96 → 03/99		04
		66	K7M 702	09/96 → 03/99		04
MEGANE Scenic	1.6 16V (JA0B, JA04, JA11)	79	K4M 700	04/98 → 10/99		04
		79	K4M 701	04/98 → 10/99		04
		79	K4M 704	04/98 → 10/99		04
		79	K4M 708	04/98 → 10/99		04
SCÉNIC I	1.4 16V (JA0D, JA1H, Ja0W, JA10)	70	K4J 714	09/99 → 08/03		04
		70	K4J 750	09/99 → 08/03		04
SYMBOL I	1.4	55	K7J 700	08/00 →		04
	1.4 16V	72	K4J 712	08/00 →		04
	1.6	66	K7M 746	03/98 →		04
THALIA I	1.4	55	K7J 700	08/00 →		04
	1.4 16V	72	K4J 712	08/00 →		04
	1.6	66	K7M 746	03/98 →		04
TWINGO II	1.2 (CN0D)	43	D7F 800	03/07 →		04
SAAB						
900 II	2.5 -24 V6	125	B258I	07/93 → 02/98		06
9000	3.0 -24 V6 CD/CDE	155	B308I	07/94 → 12/98		06
SEAT						
TOLEDO II	2.3 V5	110	AGZ	10/98 → 11/00		05
SKODA						
SUPERB	2.8 V6	142	AMX	12/01 → 03/08		06
SMART						
CABRIO (450)	0.6 (450.432)	52	M 160.920	06/02 → 01/04		06
	0.6 (S1OLA1, 450.441, 450.442, 450.443)	40	M 160.920	03/00 → 01/04		06
		40	M 160 E6AL B03	03/00 → 01/04		06
	0.6 (S1OLD2, 450.452)	45	M 160 E6AL B05	01/01 → 01/04		06
		45	M 160.920	01/01 → 01/04		06

D6KMR

		kW				QTY
SMART						
CITY-COUPE (450)	0.6 (450.330, 450.332)	52	M 160.920	06/02 → 01/04		06
	0.6 (450.352, 450.353)	45	M 160.920	01/01 → 01/04		06
		45	M 160 E6AL B05	01/01 → 01/04		06
	0.6 (S1CLA1, 450.341)	40	M 160 E6AL B03	07/98 → 01/04		06
		40	M 160.920	07/98 → 01/04		06
	0.6 (S1CLB1, 450.331, 450.336)	33	M 160 E6AL B04	07/98 → 01/04		06
		33	M 160.920	07/98 → 01/04		06
CROSSBLADE (450)	0.6 (450.418)	52	M 160.920	06/02 → 12/03		06
VAUXHALL						
AGILA Mk I (A)	1.0 12V	43	Z 10 XE	09/00 → 08/05		03
		44	Z 10 XEP	02/00 → 11/06		03
	1.2 16V	55	Z 12 XE	09/00 → 03/08		04
ANTARA	2.4	103	Z 24 XED	08/06 →		04
ASTRA Mk III (F)	1.4 i	44	C 14 NZ	04/92 → 09/98		04
		60	C 14 SE	04/92 → 09/98		04
	1.4 i 16V	66	X 14 XE	02/96 → 09/98		04
	1.4 S	55	14 NV	09/91 → 02/98		04
	1.6	74	C 16 SE	03/94 → 08/95		04
	1.6 i	55	E 16 NZ	09/91 → 02/98		04
		52	X 16 SZ	08/94 → 07/96		04
		55	C 16 NZ	03/92 → 09/98		04
		55	X 16 SZR	03/92 → 09/98		04
		74	C 16 SE	05/92 → 12/94		04
	1.6 i 16V	74	X 16 XEL	08/94 → 09/98		04
	1.8	92	C 18 XE	09/94 → 08/96		04
	1.8 16V	85	X 18 XE	11/94 → 03/01		04
	1.8 i	66	C 18 NZ	03/92 → 09/98		04
	1.8 i 16V	85	X 18 XE	09/94 → 02/98		04
		82	18 SE	09/95 → 02/98		04
		85	C 18 XEL	01/94 → 12/96		04
		92	C 18 XE	06/93 → 10/94		04
	2.0 i	85	C 20 NE	03/92 → 09/98		04
	2.0 i 16V	110	C 20 XE	09/91 → 02/98		04
		100	X 20 XEV	02/95 → 09/98		04

MAGNETI MARELLI

D6KMR

		kW				QTY
VAUXHALL						
ASTRA Mk IV (G)	1.2 16V	48	X 12 XE	02/98 → 09/00		04
		55	Z 12 XE	09/00 → 05/05		04
	1.4 16V	66	X 14 XE	02/98 → 05/05		04
		66	Z 14 XE	02/98 → 05/05		04
	1.6	55	X 16 SZR	02/98 → 09/00		04
		62	Z 16 SE	09/00 → 05/05		04
		76	Z 16 XEP	12/02 → 05/05		04
	1.6 16V	74	Z 16 XE	02/98 → 05/05		04
		74	X 16 XEL	02/98 → 05/05		04
		74	C 16 SEL	09/98 → 05/05		04
		74	Z 16 XEP	09/98 → 05/05		04
		76	Z 16 XEP	03/00 → 08/05		04
	1.6 Dualfuel	62	Z 16 SE	07/00 → 05/05		04
		63	Z 16 XE	09/02 → 05/05		04
	1.8 16V	85	X 18 XE1	02/98 → 09/00		04
		85	Z 18 XEL	03/00 → 08/05		04
		92	Z 18 XE	09/00 → 05/05		04
	1.8 16V Dualfuel	87	Z 18 XE	09/02 → 05/05		04
	2.0	118	X 20 XER	10/99 → 08/00		04
		147	Z 20 LET	09/02 → 10/05		04
	2.0 16V	100	X 20 XEV	02/98 → 05/05		04
		118	X 20 XER	10/99 → 05/05		04
	2.0 16V Turbo	140	Z 20 LET	09/00 → 08/05		04
	2.0 SRI Turbo	141	Z 20 LET	11/01 → 05/05		04
	2.0 Turbo	141	Z 20 LET	03/02 → 10/05		04
ASTRA Mk V (H)	1.6	77	Z 16 XEP	01/04 → 05/09		04
ASTRAVAN Mk III (F)	1.4 i	44	C 14 NZ	01/91 → 10/94		04
	1.6 i	52	X 16 SZ	02/94 → 10/96		04
		55	C 16 NZ	01/91 → 08/98		04
ASTRAVAN Mk IV (G)	1.6 i	55	X 16 SZR	08/98 → 09/00		04
		62	Z 16 SE	09/00 → 08/06		04
CALIBRA	2.0 i	85	C 20 NE	06/90 → 07/97	07/93 →	04
	2.0 i 16V	100	X 20 XEV	06/90 → 07/97		04
		110	C 20 XE	06/90 → 02/94		04
	2.0 i 16V 4x4	100	X 20 XEV	02/94 → 07/97		04
		110	C 20 XE	06/90 → 02/94		04
	2.0 i 4x4	85	C 20 NE	06/90 → 07/97	07/93 →	04
	2.5 i V6	125	C 25 XE	04/93 → 07/97		06
		125	X 25 XE	04/93 → 07/97		06
CARLTON Mk III	2.0	73	C 20 NEJ	09/90 → 03/94		04
	2.4 i	92	C 24 NE	09/88 → 03/94		04
	3.0 3000 24V	150	C 30 SE	09/89 → 03/94		06
	3000	115	C 30 LE	03/87 → 12/87		06
	3000 24V	147	C 30 SEJ	09/89 → 03/94		06
	3000 Cat	130	C 30 NE	03/88 → 03/94		06

D6KMR

		kW				QTY
VAUXHALL						
CAVALIER Mk III	2.0 i 16V	110	C 20 XE	09/88 → 11/95		04
	2.0 i 16V 4x4	110	C 20 XE	09/88 → 11/95		04
	2.0 i Cat	85	C 20 NE	09/90 → 11/95		04
	2.0 SRi 16V	100	X 20 XEV	09/93 → 11/95		04
	2.5 V6	125	C 25 XE	08/88 → 06/94		06
COMBO Mk I (B)	1.4	44	C 14 NZ	07/94 → 10/01		04
		60	C 14 SE	07/94 → 10/01		04
COMBO Mk II (C)	1.6	62	Z 16 SE	09/01 → 10/04		04
		64	Z 16 SE	10/01 → 11/11		04
CORSA Mk I (B)	1.0 i 12V	40	X 10 XE	11/96 → 09/00		03
	1.2 i	33	X 12 SZ	03/93 → 09/00		04
		33	C 12 NZ	03/93 → 09/00		04
	1.2 i 16V	48	X 12 XE	03/98 → 09/00		04
	1.4 i	44	X 14 SZ	03/93 → 09/00	08/95 →	04
		44	C 14 NZ	03/93 → 09/00	08/95 →	04
	1.4 i 16V	66	X 14 XE	09/94 → 09/00		04
	1.6 i 16V	78	C 16 XE	09/94 → 09/00		04
		78	X 16 XE	09/94 → 09/00		04
CORSA Mk II (C)	1.0 12V	43	Z 10 XE	09/00 → 10/03		03
	1.2 16V	55	Z 12 XE	09/00 → 10/06		04
	1.2 16V Dualfuel	55	Z 12 XE	08/10 → 10/06		04
	1.4 16V	66	Z 14 XE	09/00 → 10/06		04
	1.8 16V	92	Z 18 XE	08/00 → 09/06		04
CORSAVAN Mk I (B)	1.4 i	44	C 14 NZ	01/94 → 09/00	08/95 →	04
CORSAVAN Mk II (C)	1.2 16V	55	Z 12 XE	09/00 → 06/06		04
FRONTERA Mk I (A)	2.0	85	X 20 SE	04/95 → 08/98		04
		85	C 20 NE	04/95 → 08/98		04
	2.2 i	100	X 22 XE	03/95 → 10/98		04
MERIVA Mk I (A)	1.6 i	64	Z 16 SE	01/03 → 06/10		04
	1.6 i 16V	74	Z 16 XE	01/03 → 09/05		04
	1.8 i 16V	92	Z 18 XE	05/03 → 08/05		04
OMEGA (B)	2.0	85	20 SE	09/95 → 09/96		04
		85	X 20 SE	03/94 → 09/99		04
	2.0 16V	100	X 20 XEV	03/94 → 09/99		04
	2.2 16V	106	Y 22 XE	01/94 → 06/03		04
		106	Z 22 XE	01/94 → 06/03		04
SENATOR Mk II (B)	3.0 24V	150	C 30 SE	09/89 → 09/93		06
SIGNUM	1.8	90	Z 18 XE	06/03 → 07/05		04
SINTRA	2.2 i 16 V	104	X 22 XE	11/96 → 04/99		04
	3.0 i 24V	148	X 30 XE	11/96 → 04/99		06
TIGRA Mk I (F07)	1.4 16V	66	X 14 XE	07/94 → 12/00		04
	1.6 16V	78	X 16 XE	07/94 → 12/00		04

MAGNETI MARELLI

D6KMR

		kW				QTY
VAUXHALL						
VECTRA (B)	1.6 i	55	X 16 SZR	08/95 → 10/01		04
	1.6 i 16V	74	X 16 XEL	08/95 → 10/01		04
		74	Y 16 XE	08/95 → 10/01		04
		74	Z 16 XE	08/95 → 10/01		04
	1.8 i 16V	85	X 18 XE	10/95 → 09/00		04
		92	Z 18 XE	09/00 → 03/02		04
	2.0 i 16V	100	X 20 XEV	10/95 → 01/01		04
	2.5 i GSi	143	X 25 XE	03/98 → 07/00		06
	2.5 i V6	125	X 25 XE	09/95 → 08/00		06
	2.6 i V6	125	Y 26 SE	09/00 → 03/02		06
ZAFIRA Mk I (A)	1.6 16V	74	X 16 XEL	04/99 → 08/05		04
		74	Z 16 XE	04/99 → 08/05		04
	1.8 16V	85	X 18 XE1	05/99 → 08/00		04
		92	Z 18 XE	09/00 → 08/05		04
	1.8 Dualfuel	92	Z 18 XE	09/00 → 08/05		04
	2.0	147	Z 20 LET	06/02 → 06/05		04
	2.0 GSI Turbo	141	Z 20 LET	09/01 → 06/05		04
VOLKSWAGEN						
BORA	2.3 V5	110	AGZ	10/98 → 10/00		05
	2.3 V5 4motion	110	AGZ	12/98 → 10/00		05
CARAVELLE IV	2.8 VR 6	103	AES	11/95 → 04/00		06
	2.8 VR6 Syncro	103	AES	01/96 → 04/96		06
CORRADO	2.9 VR6	140	ABV	08/91 → 12/95		06
GOLF III	2.8 VR6	120	AAA	08/95 → 09/97		06
		128	AAA	01/92 → 08/97		06
	2.9 VR6 Syncro	140	ABV	10/94 → 04/99		06
	2.9 VR6 Syncro (1HX1)	140	ABV	10/94 → 08/97		06
GOLF IV	2.3 V5	110	AGZ	08/97 → 10/00		05
	2.3 V5 4motion	110	AGZ	12/98 → 10/00		05
JETTA III (1H2)	2.8 VR6	120	AAA	08/95 → 04/96		06
		128	AAA	01/92 → 09/98		06
JETTA IV	2.3 V5	110	AGZ	10/98 → 10/00		05
	2.3 V5 4motion	110	AGZ	12/98 → 10/00		05
MULTIVAN IV	2.8 VR 6	103	AES	11/95 → 04/00		06
	2.8 VR6 Syncro	103	AES	01/96 → 04/96		06
PASSAT (3A2, 35I)	2.8 VR6	128	AAA	06/91 → 08/96		06
PASSAT (3A5, 35I)	2.9 VR6 Syncro	135	ABV	01/94 → 05/97		06

D6KMR

		kW				QTY
VOLKSWAGEN						
PASSAT (3B2)	2.3 VR5	110	AGZ	10/96 → 11/00		05
	2.3 VR5 Syncro/4motion	110	AGZ	10/97 → 11/00		05
	2.8 Protect	142	ACK	08/96 → 11/00		06
		142	APR	08/96 → 11/00		06
		142	AQD	08/96 → 11/00		06
		142	AHA	08/96 → 11/00		06
	2.8 V6	132	AGE	05/97 → 09/99		06
		140	ATX	09/99 → 11/00		06
		140	BBG	09/99 → 11/00		06
		142	ACK	08/96 → 11/00		06
		142	APR	08/96 → 11/00		06
		142	AQD	08/96 → 11/00		06
		142	AHA	08/96 → 11/00		06
	2.8 V6 Syncro/4motion	142	ACK	10/96 → 11/00		06
		142	ALG	10/96 → 11/00		06
		142	AHA	10/96 → 11/00		06
		142	APR	10/96 → 11/00		06
		142	AQD	10/96 → 11/00		06
PASSAT (3B3)	2.8 4motion	142	ATQ	11/00 → 05/05		06
		142	AMX	11/00 → 05/05		06
	4.0 W8 4motion	202	BDP	09/01 → 09/04		08
		202	BDN	09/01 → 09/04		08
SHARAN	2.8 VR6	128	AAA	09/95 → 04/00		06
		128	AMY	09/95 → 04/00		06
	2.8 VR6 Syncro	128	AAA	11/96 → 04/00		06
		128	AMY	11/96 → 04/00		06
TRANSPORTER IV	2.8 VR6	103	AES	05/96 → 05/00		06
TRANSPORTER T4	2.8 VR6	103	AES	05/96 → 05/00		06
VENTO	2.8 VR6	128	AAA	01/92 → 09/98		06
		120	AAA	08/95 → 04/96		06
VOLVO						
960 II	2.9	150	B 6304 S	07/94 → 12/96		06
V70	2.0	93	B 5202 S	01/97 → 03/00		05
	2.5	106	B 5252 FS	01/97 → 03/00		05
		121	B 5254 S	06/98 → 03/00		05

YJT6KMR

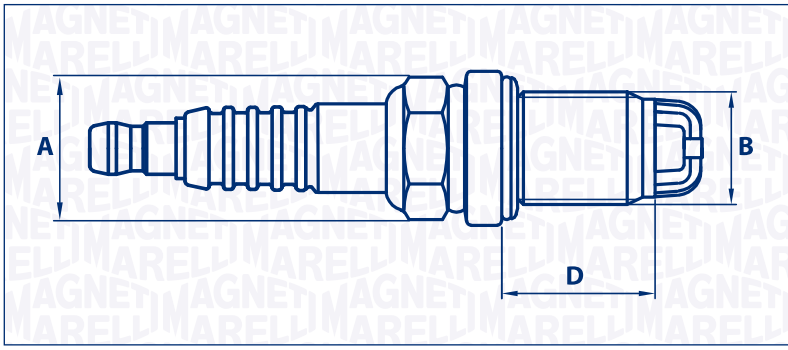

A	Hexagon Size	16
B	Thread Size	M14×1.25
C	Gap (mm)	1.0
D	Thread Reach	19.0
	Heat Range	6
	Type	Resistor
	Version	3 Mass Electrode
	Seat	Flat
	Core	Copper

BERU

0001330116	0001330117	0001335107
0001335110	0001340103	0002335100
0002335104	0002335131	0002335137
0002340101	0002340117	0002340123
14 FGH-7 DTURX0	14 FGH-8 DTUR	14 FGH-8 DTURX0
14 FGHR-7 DTUT	14 FGR-6 HQU	14 FGR-6 KQU
14 FGR-7 CTU	14 FGR-7 KQE	14 FGR-7 KQU
14 FGR-8 CTU	14FG8DTU	14FGH6DTUR
14FGH7DTURX	Z120	Z121
Z126	Z129	Z172
Z204	Z239	Z300
Z304	Z60	Z89
Z90		

BOSCH

23	44	0 241 229 676	0 241 235 706
0 241 235 752	0 242 229 613	0 242 229 648	0 242 229 799
0 242 235 656	0 242 235 715	0 242 235 748	0 242 235 766
0 242 240 587	0 242 240 590	F 7 KTCR	F 7 LTCR
F8KTCR	FGR 6 HQE 0	FGR 6 KQE	FGR 7 DQ
FGR 7 KQE	FGR 7 KQE 0	FGR 8 KQE	FGR 8 KQE 0
FR 7 KTC	FR 8 KTC		

CHAMPION

KC8ZMCC	OE032/R04	OE032/T10	OE120/R04
OE120/T10	OE123/T10	RC10VTYC4	RC89TMC
RC8TYC	RC8VTYC	RC8VTYC4	

DENSO

K20PBR-S10

NGK

2397	3045	5461	5742
6437	6449	6992	91722
96723	BKR6ETUB	BKUR6ET	BKUR6ET-10
BKUR6ETB	BKUR6ETB10	VL24	VL27
V-Line 24	V-Line 27	ZFR6S-Q	

		kW				QTY
ALFA ROMEO						
147 (937_)	1.6 16V T.SPARK ECO (937AXA1A)	77	AR 37203	01/01 → 03/10		08
156 (932_)	2.5 V6 24V (932A1)	140	AR 32402	09/97 → 12/01		06
		140	AR 32401	09/97 → 12/01		06
	2.5 V6 24V (932A11_)	141	AR 32405	10/00 → 09/05	→ 03/03	06
156 Sportwagon (932_)	2.5 V6 24V (932A1)	140	AR 32401	05/00 → 08/03		06
	2.5 V6 24V (932B11_)	141	AR 32405	10/00 → 05/06	→ 03/03	06
AUDI						
80 (8C, B4)	2.6	110	ABC	07/94 → 12/94		06
	2.6 quattro	110	ABC	06/92 → 12/94		06
	2.8	128	AAH	09/91 → 12/94		06
	2.8 quattro	128	AAH	09/91 → 12/94		06

YJT6KMR

		kW				QTY
AUDI						
90 (8C, B4)	2.6	110	ABC	07/94 → 12/94		06
	2.6 quattro	110	ABC	06/92 → 12/94		06
	2.8	128	AAH	09/91 → 12/94		06
	2.8 quattro	128	AAH	09/91 → 12/94		06
100 (4A, C4)	2.6	102	ACZ	07/93 → 06/94		06
		110	ABC	03/92 → 06/94		06
	2.6 quattro	110	ABC	04/92 → 06/94		06
	2.8 E	128	AAH	12/90 → 06/94		06
	2.8 E quattro	128	AAH	12/90 → 06/94		06
A2 (8Z0)	1.4	55	AUA	02/00 → 08/05		04
		55	BBY	02/00 → 08/05		04
	1.6 FSI	81	BAD	05/02 → 08/05		04
A3 (8L1)	1.6	74	AEH	09/96 → 05/03		04
		74	APF	09/96 → 05/03		04
		74	AKL	09/96 → 05/03		04
		75	BFQ	08/00 → 05/03		04
		75	AVU	08/00 → 05/03		04
	1.8	92	AGN	09/96 → 05/03		04
		92	APG	09/96 → 05/03		04
	1.8 20V	92	AGN	09/96 → 05/03		04
		92	APG	09/96 → 05/03		04
A3 (8P1)	1.6	75	BSF	05/03 → 08/12	→ 12/10	04
		75	BSE	05/03 → 08/12	→ 12/10	04
		75	BGU	05/03 → 08/12	→ 12/10	04
	1.6 E-Power	75	CCSA	01/11 → 08/12		04
		75	CMXA	01/11 → 08/12		04
	1.6 FSI	85	BAG	08/03 → 09/07		04
		85	BLF	08/03 → 09/07		04
		85	BLP	08/03 → 09/07		04
A3 (8P7)	1.6	75	BSE	09/08 → 05/10		04
A3 (8PA)	1.6	75	BSE	09/04 → 03/13	→ 12/10	04
		75	BGU	09/04 → 03/13	→ 12/10	04
		75	BSF	09/04 → 03/13	→ 12/10	04
	1.6 E-Power	75	CCSA	01/11 → 03/13		04
		75	CMXA	01/11 → 03/13		04
	1.6 FSI	85	BLF	09/04 → 09/07		04
		85	BLP	09/04 → 09/07		04

MAGNETI MARELLI

YJT6KMR

		kW				QTY
AUDI						
A4 (8D2, B5)	1.6	74	AHL	11/94 → 10/00		04
		74	ADP	11/94 → 10/00		04
		74	ARM	11/94 → 10/00		04
		74	ANA	11/94 → 10/00		04
		75	ALZ	07/00 → 11/00		04
	1.8	85	AFY	04/95 → 11/00		04
		92	APT	01/95 → 11/00		04
		92	ADR	01/95 → 11/00		04
		92	AVV	01/95 → 11/00		04
		92	ARG	01/95 → 11/00		04
	1.8 quattro	85	AFY	07/95 → 11/00		04
		92	ARG	01/95 → 11/00		04
		92	APT	01/95 → 11/00		04
		92	ADR	01/95 → 11/00		04
	1.8 T	110	ARK	01/95 → 11/00		04
		110	AEB	01/95 → 11/00		04
		110	AWT	01/95 → 11/00		04
		110	ANB	01/95 → 11/00		04
		110	APU	01/95 → 11/00		04
	2.6	110	ABC	01/95 → 11/00		06
	2.6 quattro	110	ABC	01/95 → 11/00		06
	2.8	128	AAH	09/95 → 07/97		06
	2.8 quattro	128	AAH	01/95 → 07/97		06
A4 (8E2, B6)	1.6	75	ALZ	11/00 → 12/04		04
	S4 quattro	253	BBK	03/03 → 12/04		08
	1.6	75	ALZ	09/01 → 12/04		04
	S4 quattro	253	BBK	03/03 → 12/04		08
A4 (8EC, B7)	1.6	75	ALZ	11/04 → 06/08		04
	S4 quattro	253	BHF	11/04 → 06/08		08
	S4 quattro	253	BBK	11/04 → 06/08		08
A4 (8ED, B7)	1.6	75	ALZ	11/04 → 06/08		04
	S4 quattro	253	BBK	11/04 → 06/08		08
A4 (8H7, B6, 8HE, B7)	S4 quattro	253	BBK	03/04 → 03/09		08
A6 (4A, C4)	1.8	92	ADR	12/95 → 10/97		04
	1.8 quattro	92	ADR	12/95 → 10/97		04
	2.6	102	ACZ	06/94 → 10/97		06
		110	ABC	06/94 → 10/97		06
	2.6 quattro	110	ABC	06/94 → 10/97		06
	2.8	128	AAH	06/94 → 10/97		06
		128	AFC	06/94 → 10/97		06
		128	AEJ	06/94 → 10/97		06
	2.8 quattro	128	AEJ	06/94 → 10/97		06
		128	AAH	06/94 → 10/97		06

YJT6KMR

		kW				QTY
AUDI						
A6 (4B2, C5)	1.8	85	AFY	05/97 → 01/05		04
		92	ANQ	07/97 → 01/05		04
		92	ARH	07/97 → 01/05		04
		92	AQE	07/97 → 01/05		04
		92	AJP	07/97 → 01/05		04
	2.0	96	ALT	08/10 → 01/05		04
	2.4	100	ARN	07/98 → 01/05		06
		100	ALW	07/98 → 01/05		06
		100	ASM	07/98 → 01/05		06
A6 (4F2, C6)	4.2 quattro	246	BAT	05/04 → 05/06		08
A6 (4F5, C6)	4.2 quattro	246	BAT	03/05 → 05/06		08
A8 (4D2, 4D8)	2.8	128	AAH	03/94 → 03/96		06
	2.8 quattro	128	AAH	03/94 → 03/96		06
A8 (4E_)	3.7 quattro	206	BFL	10/02 → 05/06		08
	4.2 quattro	246	BFM	10/02 → 07/10	→ 05/06	08
ALLROAD (4BH, C5)	4.2 V8 quattro	220	BAS	07/02 → 08/05		08
CABRIOLET (8G7, B4)	1.8	92	ADR	01/97 → 08/00		04
	2.6	102	ACZ	05/95 → 08/00		06
		110	ABC	06/93 → 08/00		06
	2.8	128	AAH	11/92 → 08/00		06
COUPE (89, 8B)	2.6	110	ABC	08/92 → 12/96		06
	2.6 quattro	110	ABC	08/92 → 12/96		06
	2.8	128	AAH	09/91 → 12/96		06
	2.8 quattro	128	AAH	08/91 → 12/96		06
TT (8N3)	1.8 T	132	ATC	10/98 → 06/06	→ 01/99	04
		132	APP	10/98 → 06/06	→ 01/99	04
		132	AUQ	10/98 → 06/06	→ 01/99	04
		132	AJQ	10/98 → 06/06	→ 01/99	04
	1.8 T quattro	132	AUQ	10/98 → 06/06	→ 01/99	04
		132	ARY	10/98 → 06/06	→ 01/99	04
		132	AJQ	10/98 → 06/06	→ 01/99	04
		165	BAM	10/98 → 06/06	→ 01/99	04
		165	APX	10/98 → 06/06	→ 01/99	04
CADILLAC						
CTS	2.6	133	LY9	04/03 → 09/07	→ 01/04	06
	3.2	160	LA3	03/02 → 09/07		06
CHEVROLET						
EPICA	2.0	105	X 20 D1	06/06 →	→ 09/09	06
LACETTI	1.8	89	F18D3	08/05 →	→ 01/07	04
TOSCA	2.0	105	X 20 D1	06/06 →	→ 09/09	06
DAEWOO						
KORANDO	2.0 16V	94	M 161.950	02/99 →		04
	2.3	105	M 161.970	01/99 →	→ 07/05	04
MUSSO	2.3	103	M 111.970	01/99 →	→ 07/05	04
REXTON	2.3 RX230 4x4	110	M 161.974	05/02 →		04

MAGNETI MARELLI

YJT6KMR

		kW				QTY
DAIHATSU						
BEGO	1.3 VVT-i	63	K3-VE	11/05 →		04
	1.3 VVT-i 4x4	63	K3-VE	11/05 →		04
SIRION	1.3 Sport 4WD	75	K3-VE2	08/00 → 03/05		04
STORIA	1.3 Sport 4WD	75	K3-VE2	08/00 → 03/05		04
TARUNA	1.3	63	K3-VE	09/01 → 10/05		04
	1.3 4WD	63	K3-VE	10/00 → 10/05		04
TERIOS	1.3	63	K3-VE	09/01 → 10/05		04
	1.3 4WD	63	K3-VE	10/00 → 10/05		04
	1.3 VVT-i	63	K3-VE	11/05 →		04
	1.3 VVT-i 4x4	63	K3-VE	11/05 →		04
YRV	1.3	64	K3-VE	02/01 →	→ 07/05	04
FIAT						
COUPE (175_)	2.0 20V Turbo	162	175 A3.000	08/96 → 08/00		05
LANCIA						
THESIS (841_)	2.0 Turbo (841AXA1B03)	136	841 E.000	07/02 → 07/09		05
MERCEDES-BENZ						
A CLASS (W168)	A 140 (168.031, 168.131)	60	M 166.960	01/01 → 08/04		04
		60	M 166.940	07/97 → 08/04		04
	A 160 (168.033, 168.133)	75	M 166.960	07/97 → 08/04		04
	A 190 (168.032, 168.132)	92	M 166.990	03/99 → 08/04		04
	A 190 Classic (168.032, 168.132)	92	M 166.990	03/99 → 08/04		04
	A 210 (168.035, 168.135)	103	M 166.995	03/02 → 08/04		04
C CLASS (W202)	C 180 (202.018)	89	M 111.921	11/94 → 05/00		04
		90	M 111.921	03/93 → 05/00	07/97 →	04
		90	M 111.920	03/93 → 05/00	07/97 →	04
	C 200 (202.020)	100	M 111.945	01/94 → 05/00	→ 06/97	04
		100	M 111.941	01/94 → 05/00	→ 06/97	04
	C 200 CGI (202.020)	100	M 111.941	01/94 → 05/00	→ 06/97	04
		100	M 111.945	01/94 → 05/00	→ 06/97	04
	C 230 (202.023)	110	M 111.974	06/96 → 06/97		04
	C 230 Kompressor (202.024)	142	M 111.975	10/95 → 05/00		04
C CLASS Station wagon (S202)	C 180 T (202.078)	90	M 111.920	06/96 → 09/00	07/97 →	04
		90	M 111.921	06/96 → 09/00	07/97 →	04
	C 200 T (202.080)	100	M 111.941	06/96 → 03/01		04
		100	M 111.945	06/96 → 03/01		04
	C 230 T (202.083)	110	M 111.974	06/96 → 06/98		04
	C 230 T Kompressor (202.085)	142	M 111.975	06/97 → 09/00		04

YJT6KMR

		kW				QTY
MERCEDES-BENZ						
CLK (C208)	200 (208.335)	100	M 111.945	06/97 → 06/02		04
	230 Kompressor (208.347)	142	M 111.975	06/97 → 06/00		04
		142	M 111.973	06/97 → 06/00		04
CLK Cabriolet (A208)	200 (208.435)	100	M 111.941	03/98 → 03/02		04
		100	M 111.945	03/98 → 03/02		04
	230 Kompressor (208.447)	142	M 111.973	03/98 → 06/00		04
		142	M 111.975	03/98 → 06/00		04
E CLASS (W210)	E 200 (210.035)	100	M 111.942	06/95 → 08/00		04
	E 200 Kompressor (210.045)	137	M 111.947	06/97 → 03/02		04
	E 230 (210.037)	110	M 111.970	06/95 → 06/97		04
E CLASS Station wagon (S210)	E 200 T (210.235)	100	M 111.942	06/96 → 08/00		04
	E 200 T Kompressor (210.245)	137	M 111.947	06/97 → 03/03		04
	E 230 T (210.237)	110	M 111.970	06/96 → 06/97		04
M CLASS (W163)	ML 230 (163.136)	110	M 111.977	02/98 → 06/05	→ 05/00	04
SLK (R170)	200 (170.435)	100	M 111.946	09/96 → 03/00		04
	230 Kompressor (170.447)	142	M 111.973	09/96 → 03/00		04
SPRINTER 2-t (901, 902)	214	105	M 111.979	02/95 → 05/06		04
SPRINTER 3-t (903)	314	105	M 111.979	02/95 → 05/06		04
SPRINTER 4-t (904)	414 4x4	105	M 111.979	05/97 → 05/06		04
	414	105	M 111.979	02/96 → 05/06		04
V CLASS (638/2)	V 200 (638.214, 638.294)	95	M 111.950	02/97 → 07/03		04
		95	M 111.948	02/97 → 07/03		04
	V 230 (638.234, 638.294)	105	M 111.978	10/96 → 07/03		04
VANEO (414)	1.4	60	M 166.940	06/02 → 07/05		04
	1.6 (414.700)	60	M 166.961	02/02 → 07/05		04
		75	M 166.961	02/02 → 07/05		04
	1.9 (414.700)	92	M 166.991	02/02 → 07/05		04
VITO Autobus (638)	113 2.0 (638.114, 638.194)	95	M 111.950	02/96 → 07/03		04
		95	M 111.948	02/96 → 07/03		04
	114 2.3 (638.134, 638.194)	105	M 111.978	12/96 → 07/03		04
OPEL						
CORSA B	1.4 i 16V	67	X 14 XE	09/94 → 09/00	→ 08/99	04
VITA B	1.4 i 16V	67	X 14 XE	09/94 → 09/00	→ 08/99	04
PORSCHE						
BOXSTER (986)	2.7	162	M 96.22	08/99 → 07/02		06
		168	M 96.23	07/02 → 12/04		06
	S 3,2	191	M 96.24	07/02 → 12/04		06
		185	M 96.21	08/99 → 07/02		06
		196	M 96.24	01/04 → 12/04		06

MAGNETI MARELLI

YJT6KMR

		kW				QTY
PORSCHE						
CAYENNE (9PA)	3.2	184	M02.2Y	10/03 → 09/07	→ 12/06	06
	S 4.5	250	M 48.00	09/02 → 09/07	→ 12/06	08
RENAULT						
19	1.8 16V (B/C53D)	99	F7P 704	06/89 → 04/92		04
	1.8 16V (D53D)	101	F7P 704	07/91 → 04/92		04
		101	F7P 700	07/91 → 04/92		04
	1.8 16V (L53D)	99	F7P 704	10/89 → 04/92		04
19 II	1.8 16V	101	F7P 704	05/92 → 04/94		04
	1.8 16V (D53D)	99	F7P 704	04/92 → 06/96		04
CLIO I	1.8 16V (C57D)	99	F7P 722	01/91 → 03/96		04
LAGUNA I	2.0	103	N7Q 704	06/95 → 02/01		04
		103	N7Q 700	06/95 → 02/01		04
	2.0 16V (B56D/M)	102	N7Q 700	06/95 → 03/01		04
		102	N7Q 704	06/95 → 03/01		04
	2.0 16V (K56D/M)	102	N7Q 704	09/95 → 03/01		04
	2.0 RT 16V (K56D/M)	102	N7Q 700	09/95 → 03/01		04
		102	N7Q 704	09/95 → 03/01		04
SAFRANE I	3.0 V6 (B54B, B544)	123	Z7X 753	12/92 → 07/96		06
		123	Z7X 722	12/92 → 07/96		06
		123	Z7X 721	12/92 → 07/96		06
		123	Z7X 723	12/92 → 07/96		06
SAFRANE II	2.0 16V (B54L)	100	N7Q 711	07/96 → 12/00		04
		100	N7Q 710	07/96 → 12/00		04
SEAT						
ALHAMBRA	1.8 T 20V	110	AJH	10/97 → 03/10	→ 05/00	04
		110	AWC	10/97 → 03/10	→ 05/00	04
	2.0 i	85	ADY	04/96 → 03/10		04
		85	ATM	04/96 → 03/10		04
ALTEA	1.6	75	CMXA	03/04 →		04
		75	BSF	03/04 →		04
		75	BSE	03/04 →		04
		75	BGU	03/04 →		04
		75	CCSA	03/04 →		04
	1.6 LPG	75	CHGA	09/09 →		04
ALTEA XL	1.6	75	CCSA	10/06 →		04
		75	CMXA	10/06 →		04
		75	BSE	10/06 →		04
		75	BSF	10/06 →		04
	1.6 LPG	75	CHGA	09/09 →		04
	1.6 Multifuel	75	CCSA	10/06 →		04
AROSA	1.0	37	AHT	10/98 → 01/01		04
	1.4 16V	74	AFK	01/00 → 06/04		04
		74	AQQ	01/00 → 06/04		04
		74	AUB	01/00 → 06/04		04

YJT6KMR

		kW				QTY
SEAT						
CORDOBA	1.4 16V	55	AUA	05/00 → 10/02		04
		55	BKY	09/02 → 12/07	→ 04/04	04
		74	AQQ	02/00 → 10/02		04
		74	BBZ	10/02 → 11/09		04
		74	AUB	02/00 → 10/02		04
		55	APE	05/00 → 10/02		04
		55	BBY	09/02 → 12/07	→ 04/04	04
	1.4 i 16V	74	AFH	09/96 → 06/99		04
	1.6	74	AKL	06/99 → 10/02		04
		74	APF	06/99 → 10/02		04
		74	AUR	06/99 → 10/02		04
		74	AEH	06/99 → 10/02		04
	1.6 i	74	AFT	07/96 → 10/99		04
		74	AKL	07/96 → 10/99		04
	2.0	85	BBX	09/02 → 11/09		04
		85	AZL	09/02 → 11/09		04
EXEO	1.6	75	ALZ	03/09 → 09/10		04
	1.8 T	110	CFMA	12/08 → 05/10		04
IBIZA II	1.4 i 16V	74	AFH	06/97 → 08/99		04
	1.6 i	74	AFT	04/96 → 08/99		04
IBIZA III	1.4 16V	55	AUA	05/00 → 02/02		04
		55	APE	05/00 → 02/02		04
		74	AUB	08/99 → 02/02		04
		74	AQQ	08/99 → 02/02		04
	1.6	74	AKL	08/99 → 02/02		04
		74	AUR	08/99 → 02/02		04
		74	AEH	08/99 → 02/02		04
		74	APF	08/99 → 02/02		04
	1.8 T 20V Cupra	115	AYP	07/00 → 02/02		04
		115	AQX	07/00 → 02/02		04
IBIZA IV	1.4 16V	55	BKY	02/02 → 12/07		04
		55	BBY	02/02 → 12/07		04
		74	AUB	02/02 → 11/09		04
		74	BBZ	02/02 → 11/09		04
	2.0	85	AZL	04/02 → 11/09	→ 06/07	04
		85	BBX	04/02 → 11/09	→ 06/07	04
IBIZA V	2.0	85	CEKA	10/08 →		04
INCA	1.4 16V	55	AUA	04/00 → 06/03		04

MAGNETI MARELLI

YJT6KMR

		kW				QTY
SEAT						
LEON (1M1)	1.4 16V	55	BCA	11/99 → 06/06		04
		55	AXP	11/99 → 06/06		04
		55	AHW	11/99 → 06/06		04
		55	APE	11/99 → 06/06		04
		55	AUA	11/99 → 06/06		04
	1.6	74	AEH	11/99 → 06/06		04
		74	AKL	11/99 → 06/06		04
		74	APF	11/99 → 06/06		04
		75	BFQ	10/05 → 06/06		04
		75	BGU	10/05 → 06/06		04
	1.6 16 V	77	ATN	09/00 → 06/06		04
		77	BCB	09/00 → 06/06		04
		77	AUS	09/00 → 06/06		04
		77	AZD	09/00 → 06/06		04
	1.8 20V	92	AGN	11/99 → 06/06		04
		92	APG	11/99 → 06/06		04
	1.8 20V T	132	APP	11/99 → 06/06		04
		132	AUQ	11/99 → 06/06		04
LEON (1P1)	1.6	75	CMXA	07/05 →		04
		75	CCSA	07/05 →		04
		75	BSF	07/05 →		04
		75	BSE	07/05 →		04
	1.6 LPG	75	CHGA	12/09 →		04
	1.6 MultiFuel	75	CMXA	11/10 →		04
		75	BSE	11/10 →		04
TOLEDO I	1.6 i	54	1F	05/91 → 03/99		04
		54	EZ	05/91 → 03/99		04
		54	ABN	05/91 → 03/99		04
		74	AFT	11/96 → 03/99		04
TOLEDO II	1.4 16V	55	AUA	01/00 → 05/02		04
		55	AXP	01/00 → 05/02		04
		55	BCA	01/00 → 05/02		04
		55	AHW	01/00 → 05/02		04
		55	APE	01/00 → 05/02		04
	1.6	74	AKL	10/98 → 07/04		04
		74	AEH	10/98 → 07/04		04
		74	APF	10/98 → 07/04		04
	1.6 16V	77	BCB	06/00 → 05/06	→ 07/04	04
		77	AUS	06/00 → 05/06	→ 07/04	04
		77	AZD	06/00 → 05/06	→ 07/04	04
	1.8 20V	92	AGN	10/98 → 07/04		04
		92	APG	10/98 → 07/04		04

YJT6KMR

		kW				QTY
SEAT						
TOLEDO III	1.6	75	CCSA	10/04 → 05/09		04
		75	BSF	10/04 → 05/09		04
		75	BSE	10/04 → 05/09		04
		75	BGU	10/04 → 05/09		04
SKODA						
FABIA (6Y2)	1.0	37	ARV	12/99 → 08/02		04
		37	AQV	12/99 → 08/02		04
	1.2	40	BMD	08/02 → 03/08	→ 05/04	03
		40	AWY	08/02 → 03/08	→ 05/04	03
	1.4 16V	55	BBY	12/99 → 03/08	08/04 →	04
		55	AUA	12/99 → 03/08	08/04 →	04
		55	BKY	12/99 → 03/08	08/04 →	04
		74	BBZ	12/99 → 03/08		04
		74	AUB	12/99 → 03/08		04
	2.0	85	AZL	12/99 → 03/08		04
FABIA (6Y3)	1.4 16V	55	BKY	10/99 → 12/07	08/04 →	04
		55	BBY	10/99 → 12/07	08/04 →	04
		55	AUA	10/99 → 12/07	08/04 →	04
		74	AUB	12/99 → 12/07		04
		74	BBZ	12/99 → 12/07		04
	2.0	85	AZL	12/99 → 12/07		04
LAURA	1.4	55	BCA	05/04 → 05/06		04
	1.6	75	CMXA	06/04 → 06/13		04
		75	BSE	06/04 → 06/13		04
		75	BGU	06/04 → 06/13		04
		75	CCSA	06/04 → 06/13		04
		75	BSF	06/04 → 06/13		04
	1.6 FSI	85	BLF	02/04 → 10/08		04
	1.6 LPG	75	CHGA	08/09 → 11/12		04
	1.6 MultiFuel	75	CMXA	01/08 → 06/13		04
		75	CCSA	01/08 → 06/13		04
OCTAVIA	1.4	44	AMD	04/99 → 03/01		04
		55	BCA	05/04 → 05/06		04
	1.4 16V	55	BCA	09/00 → 12/10		04
		55	AXP	09/00 → 12/10		04
	1.6	74	AEH	02/97 → 12/07		04
		74	AKL	02/97 → 12/07		04
		75	BGU	06/04 → 06/13		04
		75	BFQ	11/00 → 12/10		04
		75	BSF	06/04 → 06/13		04
		75	CCSA	06/04 → 06/13		04
		75	BSE	06/04 → 06/13		04
		75	AVU	11/00 → 12/10		04
		75	CMXA	06/04 → 06/13		04
	1.6 FSI	85	BLF	02/04 → 10/08		04

MAGNETI MARELLI

YJT6KMR

		kW				QTY
SKODA						
OCTAVIA	1.6 LPG	75	CHGA	08/09 → 11/12		04
	1.6 MultiFuel	75	CCSA	01/08 → 06/13		04
		75	CMXA	01/08 → 06/13		04
	1.8	92	AGN	09/96 → 07/00		04
	2.0	85	AEG	04/99 → 05/07		04
		85	APK	04/99 → 05/07		04
		85	AZH	04/99 → 05/07		04
		85	AQY	04/99 → 05/07		04
		85	AZJ	04/99 → 05/07		04
	2.0 4x4	85	AZJ	08/00 → 09/04		04
		85	AZH	08/00 → 09/04		04
SUPERB	2.0	85	AZM	12/01 → 03/08		04
SSANGYONG						
CHAIRMAN	2.3	110	M 111.974	07/97 →	→ 01/11	04
		110	M 111.970	07/97 →	→ 01/11	04
KORANDO	2.3	103	M 111.970	05/97 →	→ 03/99	04
		110	M 161.970	01/02 →	→ 01/11	04
KYRON	2.3	110	M 161.970	01/10 →	→ 01/11	04
MUSSO	2.3	103	M 111.970	10/96 →		04
VOLVO						
850	2.0	93	B 5202 S	08/94 → 12/96		05
	2.3	106	B 5234 FS	01/96 → 10/96		05
	2.5	103	B 5252	06/91 → 07/94		05
		106	B 5252 FS	08/94 → 12/96		05
		125	B 5254 S	08/91 → 12/96		05
	2.5 GLE	103	B 5252	08/92 → 07/94		05
C70 I	2.5	125	B 5254 S	06/98 → 10/05	→ 12/99	05
S60 I	2.4	103	B 5244 S2	11/00 → 04/10		05
		125	B 5244 S	11/00 → 04/10		05
	2.4 Bifuel (LPG)	103	B 5244 SG2	06/02 → 04/10		05
S70	2.0	93	B 5202 FS	01/97 → 11/00	→ 04/99	05
		93	B 5202 S	01/97 → 11/00	→ 04/99	05
	2.4	103	B 5244 S2	08/99 → 11/00		05
		103	B 5244 SG	08/99 → 11/00		05
		125	B 5244 S	01/97 → 11/00		05
		125	B 5254 S	01/97 → 11/00		05
	2.4 AWD	103	B 5244 S2	04/99 → 09/00		05
		121	B 5254 S	10/98 → 05/99		05
		125	B 5244 S	04/99 → 09/00		05
	2.4 Blu-Fuel	103	B 5244 SG	07/97 → 09/00		05
		103	B 5244 S2	07/97 → 09/00		05
	2.5	106	B 5252 FS	01/97 → 11/00	→ 04/99	05
		121	B 5254 S	06/98 → 11/00	→ 04/99	05
	2.5 Bifuel	103	B 5244 SG	07/99 → 11/00		05
		106	GB 5252 S	10/98 → 11/00	→ 04/99	05

YJT6KMR

		kW				QTY
VOLVO						
S80 I	2.0	120	B 5204 T4	06/98 → 07/06	→ 12/00	05
	2.0 T	132	B 5204 T5	12/99 → 07/06		05
		166	B 5204 T3	06/98 → 07/06	→ 12/00	05
	2.4	103	B 5244 S2	01/99 → 07/06		05
	2.4	125	B 5244 S	01/99 → 07/06		05
	2.4 Bifuel (CNG)	103	B 5244 SG2	09/01 → 07/06		05
	2.4 Bifuel (LPG)	103	B 5244 SG	09/01 → 07/06		05
	2.4 T	147	B 5244 T3	06/00 → 07/06	→ 12/03	05
	2.5 T	154	B 5254 T2	03/03 → 07/06		05
	2.5 T AWD	154	B 5254 T2	07/03 → 07/06		05
	2.8 T6	200	B 6284 T	05/98 → 07/06	→ 12/99	06
	2.9	144	B 6294 S2	06/01 → 07/06	→ 05/05	06
		147	B 6294 S	03/99 → 07/06	→ 05/01	06
		150	B 6304 S3	05/98 → 07/06	→ 12/99	06
	3.0	144	B 6294 S2	06/01 → 07/06	→ 05/05	06
	3.0 T6	200	B 6294 T	06/01 → 07/06		06
V70	2.4	103	B 5244 SG2	08/99 → 05/00		05
		103	B 5244 S2	08/99 → 05/00		05
		125	B 5244 S	01/97 → 05/00		05
		125	B 5254 S	01/97 → 05/00		05
	2.4 Bifuel	103	B 5244 SG	08/99 → 03/00		05
	2.5 Bifuel	106	GB 5252 S	10/98 → 08/99		05
V70 II	2.4	103	B 5244 S2	03/00 → 08/07		05
		125	B 5244 S	03/00 → 08/07		05
	2.4 Bifuel (CNG)	103	B 5244 SG	09/01 → 08/07		05
	2.4 Bifuel (LPG)	103	B 5244 SG2	09/01 → 08/07		05
V90 Station wagon	2.5	125	B 6254 FS	11/96 → 10/98		06
		132	B 6244 FS	11/96 → 10/97		06
VOLKSWAGEN						
BEETLE	1.6	74	AWH	10/99 → 09/00		04
		75	AYD	06/00 → 09/10	→ 05/01	04
		75	BFS	06/00 → 09/10	→ 05/01	04
	2.0	85	BDC	09/02 → 10/10		04
		85	BGD	09/02 → 10/10		04
		85	AQY	01/98 → 09/10		04
		85	APK	01/98 → 09/10		04
		85	AEG	01/98 → 09/10		04
		85	CBPA	01/98 → 09/10		04
		85	BHP	01/98 → 09/10		04
		85	BEJ	01/98 → 09/10		04
		85	BER	01/98 → 09/10		04
		85	AZJ	01/98 → 09/10		04
		85	AVH	01/98 → 09/10		04
		85	BEV	01/98 → 09/10		04
		85	AZG	01/98 → 09/10		04

MAGNETI MARELLI

YJT6KMR

		kW				QTY
VOLKSWAGEN						
BORA	1.4 16V	55	BCA	03/00 → 05/05		04
		55	APE	03/00 → 05/05		04
		55	AXP	03/00 → 05/05		04
		55	AHW	03/00 → 05/05		04
		55	AKQ	03/00 → 05/05		04
	1.6	74	APF	10/98 → 05/05		04
		74	AKL	10/98 → 05/05		04
		74	AEH	10/98 → 05/05		04
		75	AVU	08/00 → 05/05		04
		75	BJH	08/00 → 05/05		04
		75	BFQ	08/00 → 05/05		04
	1.6 16V	77	AUS	05/00 → 05/05		04
		77	ATN	05/00 → 05/05		04
		77	AZD	05/00 → 05/05		04
		77	BCB	05/00 → 05/05		04
	1.6 FSI	81	BAD	01/02 → 05/05		04
	1.8	92	AGN	10/98 → 05/05		04
		92	BAF	10/98 → 05/05		04
	1.8 4motion	92	AGN	02/99 → 05/05		04
	2.0	85	BBW	10/98 → 05/05		04
		85	AQY	10/98 → 05/05		04
		85	AZG	10/98 → 05/05		04
		85	AZJ	10/98 → 05/05		04
		85	APK	10/98 → 05/05		04
		85	AZH	10/98 → 05/05		04
	2.0 4motion	85	AZJ	04/00 → 05/05		04
		85	AZH	04/00 → 05/05		04
BORA III	1.6	75	BSF	10/05 → 10/10		04
		75	BSE	10/05 → 10/10		04
		75	BGU	10/05 → 10/10		04
		75	CCSA	10/05 → 10/10		04
	1.6 FSI	85	BLF	09/05 → 10/10	→ 06/08	04
	1.6 MultiFuel	75	CCSA	01/08 → 10/10		04
CABRIO III	1.6	74	AKS	10/94 → 05/98		04
		74	AFT	10/94 → 05/98		04
		74	AEK	10/94 → 05/98		04
CABRIO IV	1.6	74	AKS	06/98 → 06/02		04
		74	AFT	06/98 → 06/02		04
CADDY II	1.4	55	AUA	08/00 → 01/04		04
CADDY III	1.4	55	BCA	03/04 → 05/06		04
	1.6	75	BGU	04/04 →		04
		75	BSE	04/04 →		04
		75	BSF	04/04 →		04
	1.6 BiFuel	75	CHGA	05/11 →		04

YJT6KMR

		kW				QTY
VOLKSWAGEN						
DERBY	100	74	APF	12/95 → 09/01		04
		74	AEH	12/95 → 09/01		04
		74	AKL	12/95 → 09/01		04
		74	AFT	12/95 → 09/01		04
		74	AUR	12/95 → 09/01		04
	100 1.6	74	APF	12/95 → 09/01		04
		74	AEH	12/95 → 09/01		04
		74	AKL	12/95 → 09/01		04
		74	AFT	12/95 → 09/01		04
		74	AUR	12/95 → 09/01		04
	75 1.4 16V	55	APE	10/99 → 09/01		04
		55	AUA	10/99 → 09/01		04
	1.4	55	BBY	07/03 →	→ 06/05	04
		55	BKY	07/03 →	→ 06/05	04
		74	BBZ	11/03 →		04
GOLF III	1.6	74	AEK	07/95 → 08/97		04
		74	AFT	07/95 → 08/97		04
		74	AKS	07/95 → 08/97		04
	1.6 1.6 MI	74	AEK	07/95 → 08/97		04
		74	AFT	07/95 → 08/97		04
		74	AKS	07/95 → 08/97		04
GOLF IV	1.4 16V	55	BCA	08/97 → 06/05	02/01 →	04
		55	AKQ	08/97 → 06/05	02/01 →	04
		55	APE	08/97 → 06/05	02/01 →	04
		55	AXP	08/97 → 06/05	02/01 →	04
		55	AHW	08/97 → 06/05	02/01 →	04
	1.6	74	AFT	06/98 → 06/02		04
		74	AKS	06/98 → 06/02		04
		74	BAH	02/01 → 06/01		04
		74	APF	08/97 → 05/04		04
		74	AEH	08/97 → 05/04		04
		74	AKL	08/97 → 05/04		04
		75	AVU	08/00 → 06/05		04
		75	BJH	08/00 → 06/05		04
		75	BFQ	08/00 → 06/05		04
		78	AWB	08/03 → 06/05		04
	1.6 16V	77	ATN	02/00 → 06/05		04
		77	AUS	02/00 → 06/05		04
		77	AZD	02/00 → 06/05		04
		77	BCB	02/00 → 06/05		04
	1.6 FSI	81	BAD	01/02 → 06/05		04
	1.6 Trip	74	BAH	02/01 → 06/01		04
	1.8	92	BAF	08/97 → 06/05		04
		92	AGN	08/97 → 06/05		04
	1.8 4motion	92	AGN	05/98 → 06/05		04

MAGNETI MARELLI

YJT6KMR

		kW				QTY
VOLKSWAGEN						
GOLF IV	2.0	85	APK	07/98 → 05/04		04
		85	AQY	07/98 → 05/04		04
		85	AZG	07/98 → 05/04		04
		85	BER	07/98 → 05/04		04
		85	AZJ	07/98 → 05/04		04
	2.0 4motion	85	AZH	10/00 → 06/05		04
		85	AZJ	10/00 → 06/05		04
GOLF PLUS	1.4 16V	55	BCA	01/05 → 11/06	→ 05/06	04
	1.4 FSI	66	BLN	07/05 → 11/06	→ 05/06	04
	1.6	75	CMXA	05/05 → 12/13		04
		75	CCSA	05/05 → 12/13		04
		75	BSF	05/05 → 12/13		04
		75	BSE	05/05 → 12/13		04
	1.6 BiFuel	75	CHGA	05/09 → 12/13		04
	1.6 FSI	85	BLF	01/05 → 05/08		04
	1.6 MultiFuel	75	CMXA	11/07 → 12/13	05/09 →	04
		75	CCSA	11/07 → 12/13	05/09 →	04
GOLF V	1.4 16V	55	BCA	10/03 → 05/06		04
	1.4 FSI	66	BKG	10/03 → 07/06	→ 05/05	04
		66	BLN	10/03 → 07/06	→ 05/05	04
	1.6	75	BSF	01/04 → 11/08		04
		75	BSE	01/04 → 11/08		04
		75	BGU	01/04 → 11/08		04
	1.6 FSI	85	BAG	10/03 → 07/08		04
		85	BLP	10/03 → 07/08		04
		85	BLF	10/03 → 07/08		04
	1.6 GL MultiFuel	75	CCSA	10/07 → 11/08		04
	1.6 MultiFuel	75	CCSA	10/07 → 11/08		04
GOLF VI	1.6	75	CMXA	10/08 → 11/12		04
		75	BSF	10/08 → 11/12		04
		75	BSE	10/08 → 11/12		04
		75	CCSA	10/08 → 11/12		04
	1.6 BiFuel	75	CHGA	03/09 → 11/12		04
	1.6 GLX Total Flex	75	CMXA	10/08 → 11/12		04
		75	CCSA	10/08 → 11/12		04
	1.6 MultiFuel	75	CMXA	10/08 → 11/12		04
		75	CCSA	10/08 → 11/12		04
JETTA I	1.6	75	BGU	10/05 → 10/10		04
		75	CCSA	10/05 → 10/10		04
		75	BSF	10/05 → 10/10		04
		75	BSE	10/05 → 10/10		04
	1.6 FSI	85	BLF	09/05 → 10/10	→ 06/08	04
	1.6 MultiFuel	75	CCSA	01/08 → 10/10		04
JETTA III (1H2)	1.6	74	AEK	10/94 → 09/98	12/95 →	04
		74	AFT	10/94 → 09/98	12/95 →	04

YJT6KMR

		kW				QTY
VOLKSWAGEN						
JETTA III (1K2)	1.6	75	BGU	10/05 → 10/10		04
		75	CCSA	10/05 → 10/10		04
		75	BSF	10/05 → 10/10		04
		75	BSE	10/05 → 10/10		04
	1.6 FSI	85	BLF	09/05 → 10/10	→ 06/08	04
	1.6 MultiFuel	75	CCSA	01/08 → 10/10		04
JETTA IV	1.4 16V	55	AHW	03/00 → 05/05		04
		55	BCA	03/00 → 05/05		04
		55	AXP	03/00 → 05/05		04
		55	APE	03/00 → 05/05		04
		55	AKQ	03/00 → 05/05		04
	1.61.6	74	APF	10/98 → 05/05		04
		74	AKL	10/98 → 05/05		04
		74	AEH	10/98 → 05/05		04
		75	AVU	08/00 → 05/05		04
		75	BJH	08/00 → 05/05		04
		75	BFQ	08/00 → 05/05		04
	1.6 16V	77	AUS	05/00 → 05/05		04
		77	AZD	05/00 → 05/05		04
		77	ATN	05/00 → 05/05		04
		77	BCB	05/00 → 05/05		04
	1.6 FSI	81	BAD	01/02 → 05/05		04
	1.8	92	AGN	10/98 → 05/05		04
		92	BAF	10/98 → 05/05		04
	1.8 4motion	92	AGN	02/99 → 05/05		04
	2.0	85	APK	10/98 → 05/05		04
		85	AQY	10/98 → 05/05		04
		85	AZG	10/98 → 05/05		04
		85	AZH	10/98 → 05/05		04
		85	AZJ	10/98 → 05/05		04
		85	BBW	10/98 → 05/05		04
	2.0 4motion	85	AZH	04/00 → 05/05		04
		85	AZJ	04/00 → 05/05		04
JETTA V	1.6	75	BGU	10/05 → 10/10		04
		75	CCSA	10/05 → 10/10		04
		75	BSF	10/05 → 10/10		04
		75	BSE	10/05 → 10/10		04
	1.6 FSI	85	BLF	09/05 → 10/10	→ 06/08	04
	1.6 MultiFuel	75	CCSA	01/08 → 10/10		04
KOMBI V	2.0	85	AXA	11/03 →		04

MAGNETI MARELLI

YJT6KMR

		kW				QTY
VOLKSWAGEN						
LUPO	1.0	37	AHT	10/98 → 05/00		04
	1.4 16V	55	AHW	09/98 → 07/05		04
		55	BBY	09/98 → 07/05		04
		55	APE	09/98 → 07/05		04
		55	AKQ	09/98 → 07/05		04
		55	AUA	09/98 → 07/05		04
		74	AQQ	08/99 → 07/05	→ 05/03	04
		74	AUB	08/99 → 07/05	→ 05/03	04
		74	AFK	08/99 → 07/05	→ 05/03	04
	1.4 FSI	77	ARR	02/01 → 07/05	→ 05/03	04
	1.6 GTI	92	AVY	09/00 → 07/05	→ 03/03	04
MULTIVAN V	2.0	85	AXA	11/03 →		04
PASSAT (3A2, 35I)	1.6	74	AFT	10/94 → 08/96		04
		74	AEK	10/94 → 08/96		04
PASSAT (3B2)	1.6	74	ADP	10/96 → 11/00		04
		74	ARM	10/96 → 11/00		04
		74	ANA	10/96 → 11/00		04
		74	AHL	10/96 → 11/00		04
	1.8	85	AFY	01/97 → 11/00		04
		92	ARG	10/96 → 11/00		04
		92	APT	10/96 → 11/00		04
		92	ADR	10/96 → 11/00		04
	1.8 20V	92	APT	10/96 → 11/00		04
		92	ADR	10/96 → 11/00		04
		92	ARG	10/96 → 11/00		04
	1.8 Syncro/4motion	92	ARG	10/96 → 11/00		04
		92	APT	10/96 → 11/00		04
		92	ADR	10/96 → 11/00		04
PASSAT (3B3)	1.6	75	ALZ	11/00 → 05/05		04
	2.0	85	BFF	11/00 → 05/05		04
		85	AZM	11/00 → 05/05		04
		96	ALT	11/01 → 05/05		04
	2.0 4motion	85	AZM	11/00 → 05/05		04
PASSAT (3C2)	1.6	75	BSF	05/05 → 07/10	→ 05/07	04
		75	BSE	05/05 → 07/10	→ 05/07	04
	1.6 FSI	85	BLF	03/05 → 06/08	→ 05/07	04
PHAETON	4.2 V8 4motion	246	BGJ	05/03 →		08
		246	BGH	05/03 →		08

YJT6KMR

		kW				QTY
VOLKSWAGEN						
POLO (6KV2)	75 1.4 16V	55	APE	10/99 → 09/01		04
		55	AUA	10/99 → 09/01		04
	100	74	AKL	12/95 → 09/01		04
		74	APF	12/95 → 09/01		04
		74	AEH	12/95 → 09/01		04
		74	AUR	12/95 → 09/01		04
		74	AFT	12/95 → 09/01		04
	100 1.6	74	APF	12/95 → 09/01		04
		74	AEH	12/95 → 09/01		04
		74	AUR	12/95 → 09/01		04
		74	AFT	12/95 → 09/01		04
		74	AKL	12/95 → 09/01		04
POLO (6KV5)	1.6	74	AFT	05/97 → 09/01		04
		74	AUR	05/97 → 09/01		04
		74	AKL	05/97 → 09/01		04
		74	APF	05/97 → 09/01		04
POLO (6N1)	55 1.4	40	AEX	08/95 → 10/99		04
	100 1.4 16V	74	AFH	04/96 → 10/99		04
	120 1.6 16V GTI	88	AJV	09/98 → 10/99		04
POLO (6N2)	1.4	40	AKP	10/99 → 09/01		04
		40	ANX	10/99 → 09/01		04
	1.4 16V	55	APE	10/99 → 09/01		04
		55	AUA	10/99 → 09/01		04
		55	AHW	10/99 → 09/01		04
		74	AFK	10/99 → 09/01		04
		74	AUB	10/99 → 09/01		04
		74	AQQ	10/99 → 09/01		04
	1.6 16V GTI	92	AVY	10/99 → 09/01		04
		92	ARC	10/99 → 09/01		04
POLO (9A4)	1.4	55	BBY	07/03 →	→ 06/05	04
		55	BKY	07/03 →	→ 06/05	04
		74	BBZ	11/03 →		04
POLO (9N_)	1.4 16V 1.4 16V	55	BKY	10/01 → 05/08		04
		55	BBY	10/01 → 05/08		04
		74	BBZ	10/01 → 05/08		04
		74	AUB	10/01 → 05/08		04
	1.4 FSI	63	AXU	02/02 → 07/06		04
SHARAN	2.0 LPG	85	ATM	04/06 → 03/10	05/08 →	04
TOUAREG	4.2 V8	228	BHX	12/02 → 11/06		08
		228	AXQ	12/02 → 11/06		08

YJT6KMR

		kW				QTY
VOLKSWAGEN						
TOURAN	1.6	75	BSF	07/03 → 05/10		04
		75	BSE	07/03 → 05/10		04
		75	BGU	07/03 → 05/10		04
	1.6 FSI	85	BLF	02/03 → 01/07		04
		85	BAG	02/03 → 01/07		04
		85	BLP	02/03 → 01/07		04
TRANSPORTER T5	2.0	85	AXA	11/03 →		04
VAN II	1.4	55	AUA	08/00 → 01/04		04
VENTO	1.6	74	AEK	10/94 → 09/98	12/95 →	04
		74	AFT	10/94 → 09/98	12/95 →	04
VENTO III	1.6	75	BGU	10/05 → 10/10		04
		75	CCSA	10/05 → 10/10		04
		75	BSF	10/05 → 10/10		04
		75	BSE	10/05 → 10/10		04
	1.6 FSI	85	BLF	09/05 → 10/10	→ 06/08	04
	1.6 MultiFuel	75	CCSA	01/08 → 10/10		04

Tavole di comparazione IAM/OES
IAM/OES cross reference guide
Gegenüberstellung IAM/OES
Table de correspondance IAM/OES
Tabla de equivalencias IAM/OES
Tabela de equivalências IAM/OES
Πίνακας αντιστοιχιών IAM/OES
Tabela porównawcza IAM/OES
Кросс-таблица с IAM/OES номерами
IAM/OES çapraz referans tablosu

IAM/OES	MAGNETI MARELLI
AC	
C42CXLS	CT6FMR
	CW7LPR
C42XLS	CT6FMR
	CW7LPR
ACDelco	
42FS	CW7NP
43F	CW6N
43FS	CW6NP
43XLS	CT6FM
	CW7LP
44NS	CT5FMR
44XLS	CT5FMR
426FS	CW7NP
41602	7LPR
	CT6KMR
41603	CT5KMMR
41608	CT5KMMR11
41610	CT5KMMR
41611	CT5KMMR11
41627	CT5KMMR11
41628	CT5KMMR
41629	CT5KMMR
41801	CT6KMR11
41806	A5KMR
C42CFS	CW7NP
C42CXLS	CT6FM
	CW7LP
C42XLS	CT6FM
	CW7LP
C43CXLS	CT5FMR
CFR2CLS	7LPR
	CT6KMR
CFR3CLS	CT5KMMR
CR425FS	CW6NP
CR425XLS	CT5FMR
CR42XLS	CT6FMR
	CW7LPR
CR43CXLS	CT5FMR
CR44NS	CT5FMR
FR1LS	CT6KMR11
FR2LS	CT6KMR11
FR3CLS	CT5KMMR11
FR3LS	CT5KMR11
FR3LS6	CT5KMMR11

IAM/OES	MAGNETI MARELLI
ACDelco	
FR3LSK	CT5KMMR11
FR5LS	CT5KMMR11
M43FF	CW6N
R42CFS	CW7NP
R42FS	CW7NP
R43CFS	CW6NP
R43FS	CW6NP
R43NS	CT6FMR
	CW7LPR
R44CXLS	CT5FMR
R44LT	CT5FMR
R44XLS	CT5FMR
R44XLSE	A5KMR
AKBAY	
D15YC	CT6KMMR
DOX15LE1	A5KMR
DR15LTC1	YJT6KMR
DR15TCY1	YJT6KMR
DR15YC	CT6KMMR
DR17TC	YJT6KMR
DX15LTC1	YJT6KMR
DX17LTC1	YJT6KMR
DX17TC	YJT6KMR
L15Y	CT6FM
	CW7LP
L15YC	CT6FM
	CW7LP
L17Y	CT5FMR
L17YC	CT5FMR
LR15TC	CJT6FMR
LR15YC	CT6FMR
	CW7LPR
LR17TC	CJT6FMR
LR17TC1	CJT6FMR
LR17YC	CT5FMR
LX15LTC1	CJT6FMR
LX17LTC1	CJT6FMR
N14Y	CW7NP
N14YC	CW7NP
N15	CW6N
N15C	CW6N
N15Y	CW6NP
N15YC	CW6NP
NR14YC	CW7NP

IAM/OES	MAGNETI MARELLI
AKBAY	
NR15	CW6N
NR15YC	CW6NP
ALFA ROMEO	
4249164	CT6FMR
	CW7LPR
4345041	CT6FMR
	CW7LPR
46484273	CT8DKMR
46550991	YJT6KMR
46759688	CT6FMR
	CW7LPR
60571785	7LPR
	CT6KMR
ASTON MARTIN	
723116	CT6KMMR
AUTOBIANCHI	
4401550	CT6FMR
	CW7LPR
BERU	
12FR5DU	CT8DKMR
12 FR 6 DU	CT7DKMR
12 FR-6 LUX	CT7DKMR
12 VR-8 SE	CT5LDMR9
14 F-7 HUR2	A5KMR
14 F-8 DU0	CT5KMMR11
14 F-8 DUR	7LPR
	CT6KMR
14F8DU	CT5KMMR11
14F8DU4	CT5KMMR11
14 F-9 DU0	CT5KMMR11
14FG8DTU	YJT6KMR
14FGH6DTUR	YJT6KMR
14FGH7DTURX	YJT6KMR
14 FGH-7 DTURX0	YJT6KMR
14 FGH-8 DTUR	YJT6KMR
14 FGH-8 DTURX0	YJT6KMR
14 FGHR-7 DTUT	YJT6KMR
14 FGR-6 HQU	YJT6KMR
14 FGR-6 KQU	YJT6KMR
14 FGR-7 CTU	YJT6KMR
14 FGR-7 KQE	YJT6KMR

IAM/OES	MAGNETI MARELLI
BERU	
14 FGR-7 KQU	YJT6KMR
14 FGR-8 CTU	YJT6KMR
14FR6DU	7LPR
	CT6KMR
14 FR-7 DU2	7LPR
	CT6KMR
14 FR-7 NUX2	CT6KHMR11
14FR7DU	7LPR
	CT6KMR
14FR7DUW	7LPR
	CT6KMR
14FR7DUX	CT6KMR11
14FR7MU2	CT6KHMR11
14 FR 8 DU	CT5KMMR
14 FR-8 DUW	CT5KMMR
14FR8DUX	CT5KMMR11
14 FR-8 HU	A5KMR
14FR8KU	CT5KMR
14 FR-8 KU0	CT5KMR
14FR8KUOU	CT5KMR11
14FR8LU2	A5KMR
14 FR-8 LU2T	A5KMR
14 FR-8 MUI2	CT5KHMR11
14FR8NQU213	CT6KHMR11
14FR9KUX2	A5KMR
14G8DTU	CJT6FMR
14GH7DTUR	CJT6FMR
14GR8DTU	CJT6FMR
14 GH-8 DTUR	CJT6FMR
14GH8DTURX	CJT6FMR
14R6B	CW6NP
14R6BU	CW6NP
14R6D	CT6FMR
	CW7LPR
14 R-6 DU	CT6FMR
	CW7LPR
14R7B	CW6NP
14 R-7 BU	CW6NP
14R7D	CT6FMR
	CW7LPR
14R7DU	CT6FMR
	CW7LPR
14R8DU	CT5FMR
14R8DU4	CT5FMR
14R9DU	CT5FMR

IAM/OES	MAGNETI MARELLI
BERU	
14 X-AU	CW6N
14Z6A2	CW6N
14-5 BU	CW7NP
14-6 B	CW6NP
14-6 BU	CW6NP
14-6 D	CT6FM
	CW7LP
14-6 D1	CT6FMR
	CW7LPR
14-6 DU	CT6FMR
	CW7LPR
14-6 DU0	CT6FMR
	CW7LPR
14-7 A	CW6N
14-7 B	CW6NP
14-7 BU	CW6NP
14-7 D	CT6FM
	CW7LP
14-7 DU0	CT6FM
	CW7LP
14-8 DU0	CT5FMR
144B2	CW7NP
145B	CW7NP
147 AU	CW6N
147DU	CT6FMR
	CW7LPR
148D	CT5FMR
148DC	CT5FMR
148DU	CT5FMR
0001325705	CT5KMMR11
0001330104	CJT6FMR
0001330112	CJT6FMR
0001330113	CJT6FMR
0001330116	YJT6KMR
0001330117	YJT6KMR
0001330702	CT5FMR
0001330707	CT5KMMR11
0001330713	CT5FMR
0001330725	CT5KMMR11
0001330726	CT5FMR
0001330731	CT5KMMR11
0001330780	7LPR
	CT6KMR
0001335107	YJT6KMR
0001335108	CJT6FMR

IAM/OES	MAGNETI MARELLI
BERU	
0001335110	YJT6KMR
0001335702	CT6FMR
	CW7LPR
0001335714	CT6FM
	CW7LP
0001335737	CT6FM
	CW7LP
0001335742	A5KMR
0001340103	YJT6KMR
0001340702	CT6FMR
	CW7LPR
0001340707	CT6FMR
	CW7LPR
0001400701	CW6N
0001435700	CW6NP
0001435705	CW6N
0001440700	CW6NP
0001445700	CW7NP
0002230300	CT5LDMR9
0002240701	CT7DKMR
0002240702	CT7DKMR
0002245704	CT8DKMR
0002325700	CT5FMR
0002325723	A5KMR
0002330204	CT5KMR11
0002330206	CT5KMMR
0002330215	A5KMR
0002330701	CT5FMR
0002330703	CT5KMMR
0002330704	CT5KMMR11
0002330706	CJT6FMR
0002330709	CT5FMR
0002330712	A5KMR
0002330713	CT5KMR
0002330714	CT5KMR
0002330716	CT5KHMR11
0002330794	A5KMR
0002335100	YJT6KMR
0002335104	YJT6KMR
0002335131	YJT6KMR
0002335137	YJT6KMR
0002335701	CT6FMR
	CW7LPR
0002335707	7LPR
	CT6KMR

IAM/OES	MAGNETI MARELLI
BERU	
0002335708	CT6KMR11
0002335717	7LPR
	CT6KMR
0002335719	CT6KHMR11
0002336724	7LPR
	CT6KMR
0002336738	CT6KHMR11
0002340101	YJT6KMR
0002340117	YJT6KMR
0002340123	YJT6KMR
0002340701	CT6FMR
	CW7LPR
0002340702	7LPR
	CT6KMR
0002435701	CW6NP
Z1	CT5FMR
Z5	CT5KMMR11
Z8	CT5FMR
Z10	CW6NP
Z11	CT6FMR
	CW7LPR
Z15	7LPR
	CT6KMR
Z16	CT6KMR11
Z19	CW6NP
Z20	CT6FMR
	CW7LPR
Z22	CT6FMR
	CW7LPR
Z24	7LPR
	CT6KMR
Z27	CT6FMR
	CW7LPR
Z41	CW7NP
Z48	CW6NP
Z50	CT6FMR
	CW7LPR
Z57	CW6N
Z60	YJT6KMR
Z61	CT6FM
	CW7LP
Z62	CT6FM
	CW7LP
Z69	CT5FMR
Z70	CT5FMR

IAM/OES	MAGNETI MARELLI
BERU	
Z71	CT5KMMR11
Z72	CT5KMMR
Z73	CT5KMMR11
Z75	CJT6FMR
Z79	CT5KMMR11
Z82	CT5FMR
Z85	CW6N
Z89	YJT6KMR
Z90	YJT6KMR
Z91	CJT6FMR
Z92	CJT6FMR
Z93	CJT6FMR
Z94	CJT6FMR
Z100	CT5KMMR11
Z119	CT5FMR
Z120	YJT6KMR
Z121	YJT6KMR
Z126	YJT6KMR
Z129	YJT6KMR
Z152	A5KMR
Z153	CT5KMR
Z154	CT5KMR
Z172	YJT6KMR
Z183	CT5KHMR11
Z184	CT6KHMR11
Z193	7LPR
	CT6KMR
Z200	A5KMR
Z203	A5KMR
Z204	YJT6KMR
Z220	A5KMR
Z227	7LPR
	CT6KMR
Z239	YJT6KMR
Z243	CT5LDMR9
Z247	7LPR
	CT6KMR
Z249	CT5KMR11
Z255	CT5KMMR
Z273	CT6KHMR11
Z287	A5KMR
Z291	CT8DKMR
Z292	CT7DKMR
Z293	CT7DKMR
Z300	YJT6KMR

IAM/OES	MAGNETI MARELLI
BERU	
Z304	YJT6KMR
BMW	
1338145	CT6FM
	CW7LP
12121262360	CT5FMR
12121265595	CT6FMR
	CW7LPR
12121267485	CT6FMR
	CW7LPR
12121276283	CT5FMR
12121279526	CT5FMR
12121288234	CT5FMR
12-12-1-338-145	CT6FMR
	CW7LPR
12121338145	CT6FM
	CW7LP
12121711296	CT6FMR
	CW7LPR
12127671302	CT7DKMR
12127677560	CT8DKMR
12127681415	CT7DKMR
12127690603	CT8DKMR
12127728634	CT8DKMR
12129056446	CT5FMR
12129056447	CT5FMR
12129061871	CT6FMR
	CW7LPR
12129065004	CT7DKMR
BOSCH	
1	CT6FMR
	CW7LPR
2	CJT6FMR
3	CT5FMR
4	CJT6FMR
6	CT5KMMR
8	7LPR
	CT6KMR
10	CW6NP
11	CT6KMR11
12	CT6FMR
	CW7LPR
13	7LPR
	CT6KMR

IAM/OES	MAGNETI MARELLI
BOSCH	
16	CT5FMR
19	CT5KMMR11
23	YJT6KMR
39	CT5QHMR
40	CT5LDMR9
41	CT7DKMR
42	CT5KHMR11
43	CT5KMR
44	YJT6KMR
51	A5KMR
0 241 145 510	CT7DKMR
0 241 229 676	YJT6KMR
0 241 229 712	CT5KMMR11
0 241 229 713	CT5KMMR11
0 241 229 724	CT5FMR
0 241 235 607	CW6N
0 241 235 619	CW6N
0 241 235 706	YJT6KMR
0 241 235 752	YJT6KMR
0 241 235 755	CT6FMR
	CW7LPR
0 241 235 757	CJT6FMR
0 241 240 603	CW6N
0 241 240 611	CT6FM
	CW7LP
0 242 129 506	CT5LDMR9
0 242 129 508	CT5LDMR9
0 242 129 510	CT5LDMR9
0 242 135 501	CT7DKMR
0 242 135 515	CT7DKMR
0 242 140 504	CT7DKMR
0 242 140 530	CT5LDMR9
0 242 145 503	CT8DKMR
0 242 145 504	CT8DKMR
0 242 219 532	CT5KMMR
0 242 219 537	CT5KMMR11
0 242 225 580	A5KMR
0 242 225 599	CT5FMR
0 242 229 537	CT5FMR
0 242 229 576	A5KMR
0 242 229 613	YJT6KMR
0 242 229 630	CT5KHMR11
0 242 229 635	CT5KMR11
0 242 229 648	YJT6KMR
0 242 229 650	CT5QHMR

IAM/OES	MAGNETI MARELLI
BOSCH	
0 242 229 656	CT5FMR
0 242 229 658	CJT6FMR
0 242 229 659	CT5KMMR
0 242 229 660	CT5KMMR11
0 242 229 692	CT5FMR
0 242 229 699	A5KMR
0 242 229 702	CT5KHMR11
0 242 229 715	A5KMR
0 242 229 785	CT5QHMR
0 242 229 797	CT5KHMR11
0 242 229 798	CT5KMR
0 242 229 799	YJT6KMR
0 242 232 504	CJT6FMR
0 242 232 505	CJT6FMR
0 242 235 533	CW6N
0 242 235 571	CJT6FMR
0 242 235 640	7LPR
	CT6KMR
0 242 235 656	YJT6KMR
0 242 235 663	CT6FMR
	CW7LPR
0 242 235 664	CJT6FMR
0 242 235 665	CW6NP
0 242 235 666	7LPR
	CT6KMR
0 242 235 667	CT6KMR11
0 242 235 715	YJT6KMR
0 242 235 748	YJT6KMR
0 242 235 758	CT6KHMR11
0 242 235 766	YJT6KMR
0 242 235 791	CT6KHMR11
0 242 235 797	7LPR
	CT6KMR
0 242 236 565	A5KMR
0 242 240 539	CT6KMR11
0 242 240 561	CW6NP
0 242 240 577	7LPR
	CT6KMR
0 242 240 587	YJT6KMR
0 242 240 590	YJT6KMR
0 242 240 592	CT6FMR
	CW7LPR
0 242 240 593	7LPR
	CT6KMR
0 242 240 635	CT6KHMR11

IAM/OES	MAGNETI MARELLI
BOSCH	
0 242 240 638	CT6KMR11
9 240 033 535	CW6NP
F 7 KTCR	YJT6KMR
F 7 LTCR	YJT6KMR
F 8 DC	CT5KMMR11
F 8 DC 4	CT5KMMR11
F8KTCR	YJT6KMR
FGR 6 HQE 0	YJT6KMR
FGR 6 KQE	YJT6KMR
FGR 6 NQE0	CT6KHMR11
FGR 7 DQ	YJT6KMR
FGR 7 KQE	YJT6KMR
FGR 7 KQE 0	YJT6KMR
FGR 8 KQE	YJT6KMR
FGR 8 KQE 0	YJT6KMR
FQR 7 ME	CT6KHMR11
FQR 8 LE 2	A5KMR
FQR 8 LEU 2	A5KMR
FR 6 DC	7LPR
	CT6KMR
FR 6 DC 2	7LPR
	CT6KMR
FR 6 DCX	CT6KMR11
FR 7 DC	7LPR
	CT6KMR
FR 7 DCX	CT6KMR11
FR7DE	7LPR
	CT6KMR
FR 7 DE 2	7LPR
	CT6KMR
FR 7 HC	A5KMR
FR 7 KTC	YJT6KMR
FR 7 SE	CT6KHMR11
FR 8 D	CT5KMMR
FR 8 DCX	CT5KMMR11
FR 8 KC	CT5KMR
FR 8 KCU	CT5KMR11
FR 8 KTC	YJT6KMR
FR 8 LCX	A5KMR
FR 8 ME	CT5KHMR11
FR 8 SC	CT5KHMR11
FR 8 SE 0	CT5KHMR11
FR 9 LCX	A5KMR
FR 10 DC	CT5KMMR
FR 10 DCX	CT5KMMR11

IAM/OES	MAGNETI MARELLI
BOSCH	
HR 8 MCV	**CT5QHMR**
HR 8 MEV	**CT5QHMR**
VR 6 NE	**CT5LDMR9**
VR 8 SC	**CT5LDMR9**
VR 8 SE 0	**CT5LDMR9**
VR 8 SEW	**CT5LDMR9**
W 6 AC	**CW6N**
W 6 DC	**CT6FM**
	CW7LP
W 7 AC	**CW6N**
W 7 BC	**CW6NP**
W 7 DC	**CT6FMR**
	CW7LPR
W 7 LTCR	**CJT6FMR**
W 8 DC	**CT5FMR**
WR 6 BC	**CW6NP**
WR 6 D	**CT6FMR**
	CW7LPR
WR 7 AC	**CW6N**
WR 7 B	**CW6NP**
WR 7 D	**CT6FMR**
	CW7LPR
WR 7 DTC	**CJT6FMR**
WR 7 LTC	**CJT6FMR**
WR 8 D	**CT5FMR**
WR 8 DC	**CT5FMR**
WR 8 DS	**CT5FMR**
WR 8 LT	**CJT6FMR**
WR 9 D	**CT5FMR**
WR 78	**CJT6FMR**
WR 78 X	**CJT6FMR**
Y 5 DDC	**CT7DKMR**
YR 5 DDE	**CT8DKMR**
YR 5 LDE	**CT8DKMR**
YR 6 LDE	**CT7DKMR**
YR 7 DC	**CT7DKMR**
YR 7 DE	**CT7DKMR**
CADILLAC	
24425327	**YJT6KMR**

IAM/OES	MAGNETI MARELLI
CHAMPION	
1L4J	**CT6FMR**
	CW7LPR
1L4JR	**CT6FMR**
	CW7LPR
3415	**CT6FMR**
	CW7LPR
4VLSR	**CT6FMR**
	CW7LPR
9FYS	**CT6FMR**
	CW7LPR
9FYSR	**CT6FMR**
	CW7LPR
9FYSSR	**CT6FMR**
	CW7LPR
9GYSSR	**7LPR**
	CT6KMR
82CYS	**CW7NP**
955	**CT8DKMR**
C12YCC	**CT5KMMR11**
C9Y	**CT6KMMR**
C9YC4	**CT6KMR11**
EON5/286	**CT6FMR**
	CW7LPR
EON5/287	**CT6FMR**
	CW7LPR
FN14LY	**A5KMR**
KC8ZMCC	**YJT6KMR**
L64Y	**CW7NP**
L66Y	**CW6NP**
L7YC	**CW7NP**
L81Y	**CW7NP**
L82Y	**CW7NP**
L82YC	**CW7NP**
L82YCC	**CW7NP**
L85	**CW6N**
L85C	**CW6N**
L87Y	**CW6NP**
L87YC	**CW6NP**
L87YCC	**CW6NP**
L9J	**CW6N**
L9YC	**CW6NP**
N8Y	**CT6FM**
	CW7LP
N9Y	**CT6FM**
	CW7LP

IAM/OES	MAGNETI MARELLI
CHAMPION	
N9YCC	**CT6FM**
	CW7LP
N9YCX	**CT6FM**
	CW7LP
N11Y	**CT5FMR**
N11YC	**CT5FMR**
N11YCC	**CT5FMR**
N12Y	**CT5FMR**
N12YC	**CT5FMR**
N12YCC	**CT5FMR**
N13Y	**CT5FMR**
N14Y	**CT5FMR**
N66Y	**CT6FM**
	CW7LP
N281YC	**CT6FM**
	CW7LP
OE001/R04	**CT6FM**
	CW7LP
OE001/T10	**CT6FM**
	CW7LP
OE002/R04	**7LPR**
	CT6KMR
OE002/T10	**7LPR**
	CT6KMR
OE003/T10	**CT6KMMR**
OE004/R04	**CT6FMR**
	CW7LPR
OE004/T10	**CT6FMR**
	CW7LPR
OE005/T10	**CT6KMMR**
OE006/R04	**CT6FMR**
	CW7LPR
OE006/T10	**CT6FMR**
	CW7LPR
OE007/R04	**CW6NP**
OE007/T10	**CW6NP**
OE015/R04	**CT5FMR**
OE015/T10	**CT5FMR**
OE016/R04	**CT5KMMR**
OE016/T10	**CT5KMMR**
OE022/T10	**CT6FM**
	CW7LP
OE023/T10	**CT6KMMR**
OE025/R04	**CJT6FMR**
OE025/T10	**CJT6FMR**

IAM/OES	MAGNETI MARELLI
CHAMPION	
OE027/R04	CJT6FMR
OE027/T10	CJT6FMR
OE032/R04	YJT6KMR
OE032/T10	YJT6KMR
OE033/R04	7LPR
	CT6KMR
OE033/T10	7LPR
	CT6KMR
OE034/R04	7LPR
	CT6KMR
OE034/T10	7LPR
	CT6KMR
OE035/T10	CT6KHMR11
OE038/T10	CW7NP
OE041/T10	A5KMR
OE042/R04	CT5FMR
OE042/T10	CT5FMR
OE045/T10	CT5FMR
OE051/R04	CT5FMR
OE051/T10	CT5FMR
OE052/T10	CT8DKMR
OE055/T10	CT5FMR
OE062/T10	CT5KMMR11
OE063/T10	CT5KMMR11
OE064/T10	CW7NP
OE065/T10	CT5FMR
OE070/T10	CW6NP
OE071/T10	CW7NP
OE073/T10	CT8DKMR
OE081/T10	CT6KMR11
OE083/T10	CT8DKMR
OE093/R04	CT5KMMR
OE093/T10	CT5KMMR
OE102/T10	7LPR
	CT6KMR
OE104/T10	CW7NP
OE106/T10	CT5FMR
OE111/T10	CT6FMR
	CW7LPR
OE119/T10	7LPR
	CT6KMR
OE120/R04	YJT6KMR
OE120/T10	D6KMR
	YJT6KMR
OE123/T10	YJT6KMR

IAM/OES	MAGNETI MARELLI
CHAMPION	
OE127/T10	7LPR
	CT6KMR
OE130/R04	CT5LDMR9
OE130/T10	CT5LDMR9
OE132/T10	CT8DKMR
OE135/T10	CT5KHMR11
OE148/T10	CT5KHMR11
OE152/T10	CT6KMR11
OE153/T10	CT5KMMR
OE154/T10	A5KMR
OE161/T10	CT5FMR
OE170/T10	CT5FMR
OE175/R04	CT5KHMR11
OE175/T10	CT5KHMR11
OE177/T10	A5KMR
OE178/R04	CT6KHMR11
OE178/T10	CT6KHMR11
OE186/T10	CT7DKMR
OE199/T10	CT7DKMR
ON11Y	CT5FMR
ON12Y	CT5FMR
PL9YC	CW6NP
QL81Y	CW7NP
QL82YC	CW7NP
QL86	CW6N
QL86C	CW6N
QL87C	CW6N
QL87YC	CW6NP
RA4HC	CT8DKMR
RA4HCC	CT8DKMR
RA4HCX	CT8DKMR
RA6	CT8DKMR
RA6HC	CT8DKMR
RA6Y	CT8DKMR
RA6YC	CT8DKMR
RA7YC	CT7DKMR
RA8HC	CT7DKMR
RA8YC	CT7DKMR
RA8YCX4	CT7DKMR
RC8TYC	YJT6KMR
RC8VTYC	YJT6KMR
RC8VTYC4	YJT6KMR
RC8YC	7LPR
	CT6KMR
RC8YC4	CT6KMR11

IAM/OES	MAGNETI MARELLI
CHAMPION	
RC8YCC	7LPR
	CT6KMR
RC8YCC4	CT6KMR11
RC8YCL	7LPR
	CT6KMR
RC8YLC	7LPR
	CT6KMR
RC9Y	CT6KMMR
RC9YC	7LPR
	CT6KMR
RC9YC4	CT6KMR11
RC9YCC	7LPR
	CT6KMR
RC9YCC4	CT6KMR11
RC9YCE	CT6KMMR
RC9YCN4	CT6KMR11
RC10MC4	CT5KMR11
RC10VTYC4	YJT6KMR
RC10YC	CT5KMMR
RC10YC4	CT5KMMR11
RC10YCC	7LPR
	CT6KMR
RC10YCC4	CT5KMMR11
RC10YCL	CT5KMMR
RC10YCX	CT5KMMR
RC11LCC4	A5KMR
RC12ECC	A5KMR
RC12LC4	A5KMR
RC12LYC	A5KMR
RC12MC4	A5KMR
RC12MCC4	A5KMR
RC12YC	CT5KMMR
RC12YC4	CT5KMMR11
RC12YC5	CT5KMR11
RC281YC	7LPR
	CT6KMR
RC87YC	7LPR
	CT6KMR
RC87YCC	7LPR
	CT6KMR
RC87YCL	7LPR
	CT6KMR
RC89TMC	YJT6KMR
RC89YCC	CT5KMMR
RC89YCL	CT5KMMR

IAM/OES	MAGNETI MARELLI
CHAMPION	
RE7YCC	CT5QHMR
REA8MCL	CT5LDMR9
REA8MX	CT5LDMR9
REC9MCLX	CT6KHMR11
REC9YCL	CT6KHMR11
REC10YC4	CT5KHMR11
REC14PYC	CT5KHMR11
RES9YCC4	CT5QHMR
RL82Y	CW7NP
RL82YC	CW7NP
RL82YCC	CW7NP
RL86	CW6N
RL86C	CW6N
RL87Y	CW6NP
RL87YC	CW6NP
RL87YCC	CW6NP
RN8VTYC	CJT6FMR
RN8VTYC4	CJT6FMR
RN8YC	CT6FMR
	CW7LPR
RN9Y	CT6FMR
	CW7LPR
RN9YC	CT6FMR
	CW7LPR
RN9YCC	CT6FMR
	CW7LPR
RN9YCE	CT6FMR
	CW7LPR
RN9YCX	CT6FMR
	CW7LPR
RN10VTYC4	CJT6FMR
RN10Y	CT6FMR
	CW7LPR
RN10YC	CT6FMR
	CW7LPR
RN11Y	CT5FMR
RN11YCC	CT5FMR
RN12YC	CT5FMR
RN12YCC	CT5FMR
RN281YC	CT6FMR
	CW7LPR
V4LSR	CT6FMR
	CW7LPR
XC12YC	CT5KMMR
XC92YC	CT5KMMR

IAM/OES	MAGNETI MARELLI
CHEVROLET	
94837756	CT6FMR
	CW7LPR
96110493	CT6FMR
	CW7LPR
96307729	YJT6KMR
96376288	CT7DKMR
96417176	YJT6KMR
96464000	CT7DKMR
96990231	CT7DKMR
CHRYSLER	
4609079	CT5KMR11
4671057	7LPR
	CT6KMR
5213693	CT5FMR
5269897	7LPR
	CT6KMR
56028886AA	CT5KMR11
56041402AB	A5KMR
MS851555	CT6FMR
	CW7LPR
SP00RN12YC	CT5FMR
SPORC12YC5	CT5KMR11
CITROËN/PEUGEOT	
5960C1	7LPR
	CT6KMR
5960E3	CT5KHMR11
5960E4	CT6KHMR11
5960F0	7LPR
	CT6KMR
5960F2	CT5KHMR11
5960F3	CT5KHMR11
5960F7	CT5KHMR11
5960G1	CT5LDMR9
5960G3	CT6KHMR11
5960G5	7LPR
	CT6KMR
5960H7	CT6KHMR11
5960J0	CT6FMR
	CW7LPR
5960J2	7LPR
	CT6KMR
5960J3	7LPR
	CT6KMR

IAM/OES	MAGNETI MARELLI
CITROËN/PEUGEOT	
5960J5	7LPR
	CT6KMR
5960J6	7LPR
	CT6KMR
5960J9	7LPR
	CT6KMR
5960K3	CT6KHMR11
5962A2	CT6KMMR
5962A8	CT6FMR
	CW7LPR
5962C5	7LPR
	CT6KMR
5962C6	7LPR
	CT6KMR
5962E2	7LPR
	CT6KMR
5962E3	7LPR
	CT6KMR
5962-E9	CT6FMR
	CW7LPR
5962H2	7LPR
	CT6KMR
5962.H8	CT5KMMR
5962H9	CT6KMMR
5962.J1	CT5KMMR
5962J9	7LPR
	CT6KMR
5962K0	CT6KMMR
5962K1	7LPR
	CT6KMR
5962K2	7LPR
	CT6KMR
5962K4	7LPR
	CT6KMR
5962K6	7LPR
	CT6KMR
5962R4	CT6KMMR
5962R9	7LPR
	CT6KMR
5962S3	7LPR
	CT6KMR
5962S9	CT6KMMR
5962T0	CT6KMMR
5962T9	7LPR
	CT6KMR

IAM/OES	MAGNETI MARELLI
CITROËN/PEUGEOT	
5962V2	7LPR
	CT6KMR
5962W1	CT6KMMR
5962X9	7LPR
	CT6KMR
5962Z2	7LPR
	CT6KMR
5962.65	CT6FMR
	CW7LPR
59525G	7LPR
	CT6KMR
59620G	CT6KMMR
59620P	CT6KMMR
59620V	7LPR
	CT6KMR
59620W	7LPR
	CT6KMR
59621K	7LPR
	CT6KMR
59622A	CT6FMR
59622A	CW7LPR
59622W	7LPR
	CT6KMR
59623L	CT6FMR
	CW7LPR
59623N	CW6NP
59623P	CW6NP
59623R	CT6FMR
	CW7LPR
59624E	CT6FMR
	CW7LPR
59624W	7LPR
	CT6KMR
59625C	CT5KHMR11
59625G	7LPR
	CT6KMR
59625M	CT6KHMR11
59625V	CW6N
59625Y	CT6FMR
	CW7LPR
59626G	CT6KMMR
59626K	7LPR
	CT6KMR
59626L	7LPR
	CT6KMR

IAM/OES	MAGNETI MARELLI
CITROËN/PEUGEOT	
59626V	7LPR
	CT6KMR
596271	7LPR
	CT6KMR
59627Q	7LPR
	CT6KMR
59627S	7LPR
	CT6KMR
59627W	CT6KHMR11
59627X	CT6KHMR11
596004	CT6KMMR
596007	CT6FMR
	CW7LPR
596015	7LPR
	CT6KMR
596017	CT6KHMR11
596053	CT5KHMR11
596054	CT5KHMR11
596055	CT5LDMR9
596056	CT5LDMR9
596057	CT5KHMR11
596058	CT5KHMR11
596059	CT6KHMR11
596062	CT6KHMR11
596073	CT6KHMR11
596075	CT6KHMR11
596083	CT5LDMR9
596084	CT5LDMR9
596085	CT6KHMR11
596087	CT6KHMR11
596090	CT6KHMR11
596091	CT5KHMR11
596096	7LPR
	CT6KMR
596098	CT6KHMR11
596213	CT6FMR
	CW7LPR
596216	CT6FMR
	CW7LPR
596299	CT6FMR
	CW7LPR
599094	CT6KHMR11
5403277	CW6NP
5418536	CW6N
95598466	CW7NP

IAM/OES	MAGNETI MARELLI
CITROËN/PEUGEOT	
95618377	CW6N
95619039	CW7NP
95619040	CW6NP
96024607	CT6KMMR
96024614	7LPR
	CT6KMR
96070663	7LPR
	CT6KMR
96088669	CT6KMMR
96089220	7LPR
	CT6KMR
AM212207A	CW6N
AYB2127	CW6N
ZB9000064U	CT6KMMR
ZB9862093U	CT6FMR
	CW7LPR
DACIA	
224018760R	CT5LDMR9
6001544293	7LPR
	CT6KMR
6001544609	7LPR
	CT6KMR
6001544751	CW6NP
8671016890	CT5LDMR9
DACIBO001	CW6NP
DAEWOO	
3490274	CT6FMR
	CW7LPR
90359815	CT5FMR
96990231	CT7DKMR
ZWR8DC	CT5FMR
DAIHATSU	
90048-51005	CT6FMR
	CW7LPR
90048-51021	CW6N
90048-51034	CT6FMR
	CW7LPR
90048-51043	CT6FMR
	CW7LPR
90048-51055	CT6FM
	CW7LP

IAM/OES	MAGNETI MARELLI
DAIHATSU	
90048-51059	CT6FMR
	CW7LPR
90048-51072	CT5FMR
90048-51095	CT6FMR
	CW7LPR
90048-51096	CT6FMR
	CW7LPR
90048-51099	CT6KMR11
90048-51100	CT6KMR11
90048-51106	CT6KMR11
90048-51114	CT5FMR
90048-51135	CT6FMR
	CW7LPR
90048-51151	7LPR
	CT6KMR
90048-51152	7LPR
	CT6KMR
90048-51157	CT5KMMR11
90048-51158	CT5KMMR11
90048-51159	D6KMR
90048-51160	D6KMR
90048-51168	YJT6KMR
90919-51072	CT5FMR
98079-60000	CT6FMR
	CW7LPR
99520-01236	CT6FM
	CW7LP
99906-850P9003	CW6N
99906-850P9006	CW6NP
99934-09685-100	CW6NP
DENSO	
K16HPR-U11	CT5KHMR11
K16PR-U	CT5KMMR
K16PR-U11	CT5KMMR11
K16R-U	CT5KMR
K16R-U11	CT5KMR11
K20HR-U11	CT6KHMR11
K20PBR-S10	YJT6KMR
K20PR-U	CT6KMR
	7LPR
K20PR-U11	CT6KMR11
K20TNR-S9	D6KMR
KJ16CR-L11	A5KMR
Q20PR-U	CT6KMMR

IAM/OES	MAGNETI MARELLI
DENSO	
T16VR-U10	CT5QHMR
W16EPR-U	CT5FMR
W20EP-U	CT6FM
W20EPBR-S	CJT6FMR
W20EPR-U	CT6FMR
W20EPRU	CW7LPR
W20EPU	CW7LP
W20FPR-U	CW6NP
W20FSR-U	CW6N
W22FPRU	CW7NP
XE20HR-U9	CT5LDMR9
XU22EPR-U	CT7DKMR
XU24EPR-U	CT8DKMR
DODGE	
5149177AB	A5KMR
EYQUEM	
70M	CW6N
75M	CW6N
600LS	CT5FMR
700	CW6N
705S	CW6NP
707LS	CT5FMR
750	CW6N
750LS	CT6FM
	CW7LP
755LS	CT6FM
	CW7LP
755M	CW6N
755S	CW7NP
755SX	CW7NP
775SX	CW6NP
775X	CW6N
C32LS	CT5FMR
C42S	CW6NP
C52LS	CT5FMR
C62LS	CT6FM
	CW7LP
C62S	CW7NP
F65P	CW6NP
F75	CW6N
F75H	CW6N
F85P	CW6NP
F95P	CW7NP

IAM/OES	MAGNETI MARELLI
EYQUEM	
FC42LS	CT5KMMR11
FE125P	CT6FM
	CW7LP
FE45P	CT5FMR
FE55P	CT6FM
	CW7LP
FE65CPR	CT6FMR
	CW7LPR
FE65P	CT6FM
	CW7LP
FE85P	CT6FM
	CW7LP
FN52LS	CT6FMR
	CW7LPR
GT5L	CT5FMR
GT6	CW6NP
GT6L	CT6FM
	CW7LP
GT7	CW7NP
RC32LS	CT5FMR
RC42S	CW6NP
RC52LS	CT6FMR
	CW7LPR
RC52LZ3EX	CJT6FMR
RC58LZ3EX	CJT6FMR
RC62LS	CT6FMR
	CW7LPR
RC62S	CW7NP
RFC32LZ5	CT5KMR11
RFC42LS	CT5KMMR
RFC42LS5	CT5KMMR11
RFC52LS	7LPR
	CT6KMR
RFC52LS5	CT6KMR11
RFC52LZ3EX	YJT6KMR
RFC52LZE	CT5KMR
RFC58LS	7LPR
	CT6KMR
RFC58LS5	CT6KMR11
RFC58LZ	CT6KMMR
RFC58LZ3EX	YJT6KMR
RFC58LZK	7LPR
	CT6KMR
RFN52HZ	CT5KHMR11
RFN52HZ3A	CT5KHMR11

IAM/OES	MAGNETI MARELLI
EYQUEM	
RFN52LZ	CT5KMMR
RFN58HZ	CT6KHMR11
RFN58LZ	7LPR
	CT6KMR
XC32LS	CT5FMR
XC42S	CW6NP
XC52LS	CT5FMR
XC62LS	CT6FMR
	CW7LPR
XC62S	CW7NP
FIAT	
4401547	CW7NP
4401549	CT6FMR
	CW7LPR
4401551	CT6FMR
	CW7LPR
4401552	CT6FMR
	CW7LPR
5894586	7LPR
	CT6KMR
5894587	CT6FMR
	CW7LPR
5984036	CT6FMR
	CW7LPR
7546518	CT6KMMR
7546519	7LPR
	CT6KMR
7554432	CT6FMR
	CW7LPR
7554437	CT6FMR
	CW7LPR
7554444	CT6FMR
	CW7LPR
7571541	7LPR
	CT6KMR
7571576	7LPR
	CT6KMR
7571577	CT6FMR
	CW7LPR
7668669	CT6FMR
	CW7LPR
7698212	CT6KMMR
7754445	CW7NP

IAM/OES	MAGNETI MARELLI
FIAT	
7760382	CT6FMR
	CW7LPR
7772453	7LPR
	CT6KMR
7772456	CT6FMR
	CW7LPR
46144731	CT8DKMR
46229251	CT6FMR
	CW7LPR
46417010	7LPR
	CT6KMR
46454145	CT5KMMR
46461873	CT8DKMR
46471078	YJT6KMR
46480362	7LPR
	CT6KMR
46531917	CT8DKMR
46531918	CT5KMMR
46531919	CT8DKMR
46531935	CT5KMMR
46548478	7LPR
	CT6KMR
46551918	CT5KMMR
46551935	CT5KMMR
46750545	CT8DKMR
46799927	CT5KMMR
46821457	7LPR
	CT6KMR
46823299	CT7DKMR
55188857	CT7DKMR
55190788	CT7DKMR
55198201	CT7DKMR
55226083	CT7DKMR
71711639	CT6FMR
	CW7LPR
71711640	CT6FMR
	CW7LPR
71711806	CT6FMR
	CW7LPR
71711807	7LPR
	CT6KMR
71711808	7LPR
	CT6KMR
71719244	CT5KMMR
71736277	CT5KMMR

IAM/OES	MAGNETI MARELLI
FIAT	
71736278	CT6FMR
	CW7LPR
71736279	CT6FMR
	CW7LPR
71737139	CT7DKMR
77719244	CT7DKMR
9151700180	CT5FMR
9405960078	CT5FMR
9628000280	7LPR
	CT6KMR
9636393480	CT6KHMR11
9636419280	7LPR
	CT6KMR
9639814380	7LPR
	CT6KMR
9649464080	CT6KHMR11
9649464180	CT6KHMR11
FORD	
2U7J12405AA	CT5QHMR
4M5G12405XD	CT5QHMR
92OF12045CBB	CT6KMMR
92OF12045EB	7LPR
	CT6KMR
92OF12405FB	CT6KMMR
920F12405CBA	CT6KMMR
1110500	7LPR
	CT6KMR
1120829	7LPR
	CT6KMR
1120830	7LPR
	CT6KMR
1120831	CT6KMMR
1216466	CT5QHMR
1233897	CT5QHMR
1439595	CT5QHMR
1493001	CT5QHMR
1518878	CT6FMR
	CW7LPR
1542499	CT7DKMR
3588254	A5KMR
3899252	CT6KMR11
3966269	CT5QHMR
5099727	7LPR
	CT6KMR

IAM/OES	MAGNETI MARELLI
FORD	
5099742	CT6FMR
	CW7LPR
5099747	CW6NP
5099748	CW6N
5099751	CT5FMR
5099767	CT6FMR
	CW7LPR
5099768	CT6FMR
	CW7LPR
5099775	CT6KMMR
5099777	7LPR
	CT6KMR
5099779	CT6KMMR
5099782	CT6FMR
	CW7LPR
5099784	CW6NP
5099828	CT6KMMR
5099833	7LPR
	CT6KMR
5099933	CW6N
6190831	CT6KMR11
F7PE12405AA	CT5QHMR
GENERAL MOTORS	
3490229	CW6NP
3490258	CW6NP
3496307	CT6FMR
	CW7LPR
5505819	CW6NP
5613100	CT6FMR
	CW7LPR
25108074	CT6KMMR
25109002	CT6FMR
	CW7LPR
55562534	A5KMR
90239569	CW6NP
90297143	CW6NP
90350018	CT6FMR
	CW7LPR
90357582	7LPR
	CT6KMR
90423215	7LPR
	CT6KMR
90442210	7LPR
	CT6KMR

IAM/OES	MAGNETI MARELLI
GENERAL MOTORS	
90485247	CT6FMR
	CW7LPR
90487588	CT6KMMR
90512989	CT5FMR
91143774	CT6FMR
	CW7LPR
91149455	CT6KMR11
92063308	CT5KMMR11
93171875	CW6N
93176801	A5KMR
93176802	A5KMR
93180485	A5KMR
93742296	CT5FMR
96068562	7LPR
	CT6KMR
96068563	7LPR
	CT6KMR
96130723	CT6KMR11
HONDA	
98076-56716	CW6N
98076-56717	CW6NP
98076-56719	CW6NP
98076-56721	CW6NP
98076-56729	CW6NP
98076-56740	CW6N
98076-56747	CW6NP
98076-56756	CW6NP
98076-57717	CW7NP
98076-57719	CW7NP
98079-5514E	CT5KMMR11
98079-5514EHE	CT5KMMR11
98079-5514J	CT5KMMR
98079-5514P	A5KMR
98079-5515E	CT5KMMR11
98079-5515G	A5KMR
98079-55817	CT5FMR
98079-55827	CT5FMR
98079-55841	CT5FMR
98079-55846	CT5FMR
98079-55855	CT5FMR
98079-5614E	CT6KMR11
98079-5614EHE	CT6KMR11
98079-5615E	CT6KMR11

IAM/OES	MAGNETI MARELLI
HONDA	
98079-56811	CT6FMR
	CW7LPR
98079-56841	CT6FMR
	CW7LPR
98079-56846	CT6FMR
	CW7LPR
98079-56851	CT6FMR
	CW7LPR
98079-56854	CT6FMR
	CW7LPR
98079-56855	CT6FMR
	CW7LPR
ZH98000-1000	CT6FMR
	CW7LPR
HYUNDAI	
18814-08051	CT5KMMR11
18814-08061	7LPR
	CT6KMR
18814-08062	7LPR
	CT6KMR
18814-11041	CT5KMMR11
18814-11051	CT5KMMR11
18814-11061	CT6KMR11
18823-08091	7LPR
	CT6KMR
18823-08101	CT5KMMR11
18823-11091	CT6KMR11
18823-11101	CT5KMMR11
18823-11102	CT5KMMR
18837-08051	CT5KMMR11
18841-11051	CT5KHMR11
27400-18110	7LPR
	CT6KMR
Y18823-11101	CT5KMMR11
INNOCENTI	
7510960	CT6FMR
	CW7LPR
6553206604	CT6FMR
	CW7LPR
6563208605	CT6FMR
	CW7LPR

IAM/OES	MAGNETI MARELLI
ISUZU	
5-81380001-0	CT5FMR
5-81380005-0	CT5FMR
5-81380006-0	CT6FM
	CW7LP
5-86007635-0	CT5KMMR11
5-86007636-0	A5KMR
5-86121749-0	CT5KMMR11
8-94219943-0	CT6FMR
	CW7LPR
8-94328372-0	CT6KMR11
8-94328374-0	CT6KMR11
8-97012928-0	7LPR
	CT6KMR
8-97012930-0	7LPR
	CT6KMR
9-82513103-0	CT6FMR
	CW7LPR
9-82513106-0	CT5FMR
JAGUAR	
EAC8917	CT5FMR
EBC8143	CT5KMMR
EBC11480	7LPR
	CT6KMR
JEEP	
33003862	7LPR
	CT6KMR
56027275	A5KMR
56028236AA	A5KMR
SP000ZFR5N	A5KMR
SP0RC12ECC	A5KMR
SPLZFR5C11	CT5KHMR11
SPRC12MCC4	A5KMR
KIA	
K01A18110	CT5KMMR
K01C18100	CT6KMR11
K01C18110	CT6KMR11
K1DC18110	CT5KMMR11
K2AA18100	7LPR
	CT6KMR
K2AA18110	CT6KMR11
K9A718110	7LPR
	CT6KMR

IAM/OES	MAGNETI MARELLI
KIA	
K01118110	CT5KMMR
K01318110	CT6KMR11
LADA	
2101-3707000-02	CT6FMR
	CW7LPR
2101-3707000-60	CT6FM
	CW7LP
2108-3707010-10	CT6FMR
	CW7LPR
2108-3707010-12	CT6FMR
	CW7LPR
2111-3707010-01	CT6FMR
	CW7LPR
2112-3707010-01	CT6FMR
	CW7LPR
21013707	CT6FMR
	CW7LPR
210137000	CT6FMR
	CW7LPR
210837000	CT6FMR
	CW7LPR
2101037070	CT6FMR
	CW7LPR
2108370701	CT6FMR
	CW7LPR
2111370701	CT6FMR
	CW7LPR
2112370701	CT6FMR
	CW7LPR
21013707001	CT6FMR
	CW7LPR
21083707010	CT6FMR
	CW7LPR
21113707010	CT6FMR
	CW7LPR
LANCIA	
7554442	CT6FMR
	CW7LPR
46481273	CT8DKMR

IAM/OES	MAGNETI MARELLI
LAND ROVER	
NLP10003	7LPR
	CT6KMR
NLP100190	CT6KMR11
RTC3570	CT5FMR
RTC3812	CT6FM
	CW7LP
LETRIKA	
F65CP	CW6NP
F65CPR	CW6NP
F65P	CW6NP
F65PR	CW6NP
F65PRS	CW6NP
F65PS	CW6NP
F70	CW6N
F75	CW6N
F75RS	CW6N
F75S	CW6N
F85CP	CW6NP
F85P	CW6NP
F85PS	CW6NP
F95P	CW7NP
F95PS	CW7NP
FE125P	CT6FM
	CW7LP
FE45P	CT5FMR
FE55P	CT5FMR
FE55PRS	CT5FMR
FE55PS	CT5FMR
FE65CP	CT6FM
	CW7LP
FE65CPR	CT6FMR
	CW7LPR
FE65PR	CT6FMR
	CW7LPR
FE65PRS	CT6FMR
	CW7LPR
FE65PS	CT6FM
	CW7LP
FE65PTRS	CJT6FMR
GT5L	CT5FMR
GT6	CW6NP
GT6L	CT6FM
	CW7LP
GT7	CW7NP

IAM/OES	MAGNETI MARELLI
LETRIKA	
SFE55LRS	A5KMR
SFE55LS	A5KMR
SFE55PTRS	YJT6KMR
SFE65CPR	CT6KMMR
SFE65PRS	CT6KMMR
SFE65PS	CT6KMMR
MASERATI	
CND96875	CT8DKMR
MAZDA	
1N0418110	CT5KMR11
18BP01	CT5KMMR11
18BP03	CT6KMR11
30418110	CT6FMR
	CW7LPR
66018110	CT5FMR
74524210	CT6FMR
	CW7LPR
169018110	CT6FMR
	CW7LPR
A50218110	CT6FM
	CW7LP
AZ0818110	CT5FMR
AZ0918110	CT5FMR
B69518110	CT6KMMR
B69618110	CT6KMMR
BP0118110	CT5KMMR11
BP0218110	CT5KMMR11
BP0318110	CT6KMR11
BP0418110	CT6KMR11
BP1118110	CT5KMMR11
BP1218110	CT5KMMR11
BP1318110	CT5KMMR11
BP1318110A	CT5KMMR11
BP1418110	CT6KMR11
BP4718110	CT5KMMR
BP4818110	CT5KMMR
BP4918110	7LPR
	CT6KMR
BP5018110	7LPR
	CT6KMR
BPY118110	CT5KMMR11
BPY218110	CT5KMMR11
BPY418110	CT6KMR11

IAM/OES	MAGNETI MARELLI
MAZDA	
IA5018110	7LPR
	CT6KMR
LFY118110	CT5QHMR
ZZS118110	CT7DKMR
ZZS218110	CT7DKMR
MERCEDES-BENZ	
21592203	CT5FMR
21592403	CT6FMR
	CW7LPR
21592803	CT6FMR
	CW7LPR
21592903	CT5FMR
21593103	CT5FMR
21594103	CT6FMR
	CW7LPR
21594203	CT6FMR
	CW7LPR
21594803	CT5FMR
31591003	CT5FMR
31591103	CT5FMR
31591203	CT6FMR
	CW7LPR
31591303	CT6FMR
	CW7LPR
31592603	CT6FMR
	CW7LPR
31592703	CT5FMR
31592903	CT5FMR
31594003	7LPR
	CT6KMR
31594103	CT5KMMR11
31594503	CT6FMR
	CW7LPR
31594703	CT5FMR
31595303	CT5KMMR
31595703	CT6FMR
	CW7LPR
31596503	YJT6KMR
31596803	CT5KMMR11
31597103	CT5KMMR
31597203	YJT6KMR
31597303	YJT6KMR
31597503	YJT6KMR
31597603	YJT6KMR

IAM/OES	MAGNETI MARELLI
MERCEDES-BENZ	
31597803	YJT6KMR
31599003	YJT6KMR
41592603	7LPR
	CT6KMR
41593003	CT6KMR11
41593603	CT6KMR11
1101590003	CT6FMR
	CW7LPR
1161590003	CT6FMR
	CW7LPR
1161590103	CT6FMR
	CW7LPR
3159750326	YJT6KMR
A0021592203	CT5FMR
A0021592403	CT6FMR
	CW7LPR
A0021592803	CT6FMR
	CW7LPR
A0021592903	CT5FMR
A0021593103	CT5FMR
A0021594103	CT6FMR
	CW7LPR
A0021594203	CT6FMR
	CW7LPR
A0021594803	CT5FMR
A0031591003	CT5FMR
A0031591103	CT5FMR
A0031591203	CT6FMR
	CW7LPR
A0031591303	CT6FMR
	CW7LPR
A0031592603	CT6FMR
	CW7LPR
A0031592703	CT5FMR
A0031592903	CT5FMR
A0031594003	7LPR
	CT6KMR
A0031594103	CT5KMMR11
A0031594503	CT6FMR
	CW7LPR
A0031594703	CT5FMR
A0031595303	CT5KMMR
A0031595703	CT6FMR
	CW7LPR
A0031596503	YJT6KMR

IAM/OES	MAGNETI MARELLI
MERCEDES-BENZ	
A0031596803	CT5KMMR11
A0031597103	CT5KMMR
A0031597203	YJT6KMR
A0031597303	YJT6KMR
A0031597503	YJT6KMR
A0031597603	YJT6KMR
A0031597803	YJT6KMR
A0031599003	YJT6KMR
A0041592603	7LPR
	CT6KMR
A0041593003	CT6KMR11
A0041593603	CT6KMR11
A1101590003	CT6FMR
	CW7LPR
A1161590003	CT6FMR
	CW7LPR
A1161590103	CT6FMR
	CW7LPR
MITSUBISHI	
M05269897	CT6FMR
	CW7LPR
MD310294	CT6KMR11
MD344180	CT5KMMR11
MD350291	CT6KMR11
MD851023	CT6FM
	CW7LP
MN119942	YJT6KMR
MN128362	CT6KHMR11
MS851022	CT5FMR
MS851023	CT6FM
	CW7LP
MS851126	CT6FMR
	CW7LPR
MS851182	CT5FMR
MS851183	CT6FMR
	CW7LPR
MS851232	CT5FMR
MS851233	CT6FMR
	CW7LPR
MS851235	CT5FMR
MS851236	CT6FMR
	CW7LPR
MS851283	CT6FM
	CW7LP

IAM/OES	MAGNETI MARELLI
MITSUBISHI	
MS851317	CT7DKMR
MS851351	CT5KMMR
MS851357	CT5KMMR11
MS851358	CT6KMR11
MS851361	CT5KMMR11
MS851362	CT6KMR11
MS851367	CT5KMMR
MS851368	7LPR
	CT6KMR
MS851377	CT5KMMR11
MS851402	CT5FMR
MS851403	CT6FMR
	CW7LPR
MS851412	CT5FMR
MS851413	CT6FMR
	CW7LPR
MS851437	CT5FMR
MS851438	CT6FM
	CW7LP
MS851487	CT7DKMR
MS851572	CT5KMMR11
MS851720	CT5KMMR
MS851721	CT5KMMR
MS851727	CT5KMMR11
MS851728	CT6KMR11
MS851731	CT5KMMR11
MS851732	CT6KMR11
MS851737	CT5KMMR
MS851738	7LPR
	CT6KMR
MOTORCRAFT	
1Y0A18110	CT6KMR11
1Y0F18110	CT7DKMR
1Y0G18110	A5KMR
1Y0018110	CT5FMR
1Y0118110	CT6FMR
	CW7LPR
1Y0618110	CT5KMMR
1Y0718110	7LPR
	CT6KMR
1Y0918110	CT5KMMR11
AE3	CW6N
AE3C	CW6N
AE3X	CW6N

IAM/OES	MAGNETI MARELLI
MOTORCRAFT	
AE22	CW7NP
AE22C	CW7NP
AE32	CW6NP
AE32C	CW6NP
AER22C	CW7NP
AER32	CW6NP
AG32	CT6FM
	CW7LP
AG32A	CT6FM
	CW7LP
AG42C	CT5FMR
AG44	A5KMR
AG54	A5KMR
AGP22CD	CT6KMMR
AGPR22C	7LPR
	CT6KMR
AGPR22C1	CT6KMR11
AGPR22CD	CT6KMMR
AGPR32C	7LPR
	CT6KMR
AGPR32C1	CT6KMR11
AGPR32CD	CT6KMMR
AGR32	CT6FMR
	CW7LPR
AGR42	CT5FMR
AGSP32C	CT5KMMR11
AGSP52C	CT5KMMR11
AGSP54	A5KMR
AV2X	CW6N
AYFS22CB	CT5QHMR
AYFS32CJ	CT5QHMR
AZFS22C	CT5QHMR
NGK	
0005	CT5QHMR
1052	CW6N
1090	CW6N
1092	CW7NP
1093	CW7NP
1269	CT6KMMR
1297	CT6KMMR
1662	CT5KMMR11
1667	CT5KMMR
1691	CT7DKMR
2087	CT5KMR

IAM/OES	MAGNETI MARELLI
NGK	
2140	CT5FMR
2268	CT6FMR
	CW7LPR
2285	CT5FMR
2330	CT6KMMR
2355	CT5KMR11
2364	CT5FMR
2382	CT5KMMR11
2397	YJT6KMR
2417	CW6N
2460	CT5KMMR
2470	CJT6FMR
2526	CT5KMR11
2756	CT6KMR11
2876	CJT6FMR
2948	CT6FMR
	CW7LPR
3045	YJT6KMR
3172	CJT6FMR
3239	CT5FMR
3377	CJT6FMR
3672	CT6KHMR11
3686	CT5KMMR11
3781	CT5FMR
3783	7LPR
	CT6KMR
3922	CW6N
3932	CT7DKMR
3975	CW6NP
4006	CT5FMR
4008	CT6FMR
	CW7LPR
4046	CT6KMMR
4179	CT8DKMR
4200	CW6N
4293	CT6KMR11
4415	CT7DKMR
4510	CW6N
4511	CW6NP
4553	CW6NP
4559	CT5QHMR
4619	7LPR
	CT6KMR
4636	CT5KMMR11
4704	CT6KHMR11

IAM/OES	MAGNETI MARELLI
NGK	
4795	CT7DKMR
4856	7LPR
	CT6KMR
4876	7LPR
	CT6KMR
4983	CT7DKMR
5039	CT6FM
	CW7LP
5111	CW7NP
5155	CT5KMMR
5188	CT5KMMR11
5343	CW6NP
5375	7LPR
	CT6KMR
5461	YJT6KMR
5541	CW7NP
5553	CT6KMR11
5584	A5KMR
5637	CT6FM
	CW7LP
5639	CW6N
5643	CT5KMMR11
5675	CT5KMMR
5692	CT8DKMR
5742	YJT6KMR
5776	CT5KMR11
5860	CT6KMMR
5932	CJT6FMR
5942	CT5LDMR9
6129	CT6KMMR
6154	CW6N
6233	CT5KMMR
6234	CT5KMMR11
6237	CT6KMMR
6376	CT5KHMR11
6422	CW7NP
6437	YJT6KMR
6449	YJT6KMR
6464	CT6FMR
	CW7LPR
6465	CT6KMR11
6511	CT5FMR
6585	CT5QHMR
6668	CT6KHMR11
6677	CT6KHMR11

IAM/OES	MAGNETI MARELLI
NGK	
6714	CT5KMMR
6717	7LPR
	CT6KMR
6799	CT5LDMR9
6893	A5KMR
6953	CT5KMMR11
6962	7LPR
	CT6KMR
6992	YJT6KMR
7022	CW6NP
7075	CT5FMR
7113	CT5KHMR11
7168	CT8DKMR
7264	CJT6FMR
7281	CT5FMR
7331	CW6NP
7340	CT6KMR11
7373	7LPR
	CT6KMR
7390	CT5KMR
7422	CT5FMR
7529	CT6FM
	CW7LP
7639	CT6FM
	CW7LP
7642	CT5KMMR
7659	D6KMR
7811	CT6FMR
	CW7LPR
7822	CT6FMR
	CW7LPR
7917	A5KMR
7938	CT5KMMR
90888	CT6KMR11
91406	CT6FMR
	CW7LPR
91597	CT5KMMR11
91722	YJT6KMR
92010	CW6NP
92734	CT6KHMR11
93030	CT5LDMR9
94024	CJT6FMR
94037	CT7DKMR
94067	7LPR
	CT6KMR

IAM/OES	MAGNETI MARELLI
NGK	
94313	**CW6NP**
94811	**CT6FMR**
	CW7LPR
95737	**CT5FMR**
96178	**CT6KMMR**
96404	**CT5FMR**
96463	**CT5QHMR**
96523	**A5KMR**
96628	**CT5KMMR**
96723	**YJT6KMR**
97374	**CT5KHMR11**
97472	**CT7DKMR**
97725	**CJT6FMR**
B6HS	**CW6N**
B6HS-10	**CW6N**
B6HS-5	**CW6N**
B6HSA	**CW6N**
BCP6E	**CT6KMMR**
BCPR6E	**CT6KMMR**
BCPR6ES	**CT6KMMR**
BK5E	**CT5KMMR**
BK5E11	**CT5KMMR11**
BK5ES	**CT5KMMR**
BK5ESZ	**CT5KMMR**
BK6E11	**CT6KMR11**
BKR5E	**CT5KMMR**
BKR5E-11	**CT5KMMR11**
BKR5EN	**CT5KMMR**
BKR5ES	**CT5KMMR**
BKR5ES11	**CT5KMMR11**
BKR5ESA11	**CT5KMMR11**
BKR5ESZA	**CT5KMMR**
BKR5EY	**CT5KMR**
BKR5EY11	**CT5KMR11**
BKR5EYA	**CT5KMR**
BKR5EYA11	**CT5KMR11**
BKR5EZ	**CT5KMMR**
BKR6E	**7LPR**
	CT6KMR
BKR6E-11	**CT6KMR11**
BKR6EN	**7LPR**
	CT6KMR
BKR6ES	**7LPR**
	CT6KMR
BKR6ES11	**CT6KMR11**

IAM/OES	MAGNETI MARELLI
NGK	
BKR6ESZ10	**CT6KMR11**
BKR6ETUB	**YJT6KMR**
BKR6EZ	**7LPR**
	CT6KMR
BKR6EZB	**CT6KMR11**
BKUR6EK9	**D6KMR**
BKUR6ET	**YJT6KMR**
BKUR6ET-10	**YJT6KMR**
BKUR6ETB	**YJT6KMR**
BKUR6ETB10	**YJT6KMR**
BP5E	**CT5FMR**
BP5ES	**CT5FMR**
BP5ESA	**CT5FMR**
BP5ESL	**CT5FMR**
BP5EZ	**CT5FMR**
BP6E	**CT6FM**
	CW7LP
BP6ES	**CT6FMR**
	CW7LPR
BP6ESA	**CT6FMR**
	CW7LPR
BP6ESZ	**CT6FM**
	CW7LP
BP6EZ	**CT6FMR**
	CW7LPR
BP6H	**CW6NP**
BP6HS	**CW6NP**
BP7HS	**CW7NP**
BPR5E	**CT5FMR**
BPR5ES	**CT5FMR**
BPR5ESL	**CT5FMR**
BPR6E	**CT6FMR**
	CW7LPR
BPR6E11	**CT6FMR**
	CW7LPR
BPR6ES	**CT6FMR**
	CW7LPR
BPR6EZ	**CT6FMR**
	CW7LPR
BPR6H	**CW6NP**
BPR6HS	**CW6NP**
BPR7HS	**CW7NP**
BPR7HS10	**CW7NP**
BPR7HSA	**CW7NP**
BPZ7HS10	**CW7NP**

IAM/OES	MAGNETI MARELLI
NGK	
BR6HS	**CW6N**
BR6HS10	**CW6N**
BUR5ET	**CJT6FMR**
BUR5ET-10	**CJT6FMR**
BUR5ETB10	**CJT6FMR**
BUR6ET	**CJT6FMR**
DCP8E	**CT8DKMR**
DCPR7E	**CT7DKMR**
DCPR7E-N-10	**CT7DKMR**
DCPR7EN	**CT7DKMR**
DCPR7ES	**CT7DKMR**
DCPR8E	**CT8DKMR**
DCPR8EKC	**CT8DKMR**
DCPR8EN	**CT8DKMR**
FR4	**CT5KMMR**
FR5	**7LPR**
	CT6KMR
FR45	**CT5KMMR11**
LFR5A-11	**CT5KHMR11**
LFR5B	**CT5KHMR11**
LFR6A	**CT6KHMR11**
LFR6A11	**CT6KHMR11**
LFR6B	**CT6KHMR11**
LFR6C	**CT6KHMR11**
LFR6D	**CT6KHMR11**
LZFR5C11	**CT5KHMR11**
LZFR5C11G	**CT5KHMR11**
LZKAR7A	**CT5LDMR9**
LZKAR7B	**CT5LDMR9**
TR5A-10	**CT5QHMR**
TR5A13	**CT5QHMR**
TR5B-13	**CT5QHMR**
TR5B13	**CT5QHMR**
V-Line 1	**CJT6FMR**
V-line 2	**CT6FMR**
	CW7LPR
V-line 3	**CW6NP**
V-line 4	**CT6FM**
	CW7LP
V-Line 6	**CT5FMR**
V-Line 8	**CT5FMR**
V-Line 12	**CT6KMMR**
V-Line 14	**CT6KMR11**
V-Line 17	**CT6KMMR**
V-Line 18	**CW6NP**

IAM/OES	MAGNETI MARELLI
NGK	
V-Line 21	CJT6FMR
V-Line 22	CJT6FMR
V-Line 24	YJT6KMR
V-Line 27	YJT6KMR
V-Line 28	7LPR
	CT6KMR
V-Line 33	CT5KMMR11
V-Line 35	CT5KMMR
V-Line 36	CT5KMMR
V-Line 38	7LPR
	CT6KMR
V-Line 39	CT5KMR11
V-Line 42	CT7DKMR
V-Line 43	CT7DKMR
V-Line 45	CT5QHMR
VL1	CJT6FMR
VL2	CT6FMR
	CW7LPR
VL3	CW6NP
VL4	CT6FM
	CW7LP
VL6	CT5FMR
VL8	CT5FMR
VL12	CT6KMMR
VL14	CT6KMR11
VL17	CT6KMMR
VL18	CW6NP
VL21	CJT6FMR
VL22	CJT6FMR
VL24	YJT6KMR
VL27	YJT6KMR
VL28	7LPR
	CT6KMR
VL33	CT5KMMR11
VL35	CT5KMMR
VL36	CT5KMMR
VL38	7LPR
	CT6KMR
VL39	CT5KMR11
VL42	CT7DKMR
VL43	CT7DKMR
VL45	CT5QHMR
ZFR5C11G	A5KMR
ZFR5J11	A5KMR
ZFR5N	A5KMR

IAM/OES	MAGNETI MARELLI
NGK	
ZFR5N11	A5KMR
ZFR5P-G	A5KMR
ZFR5PG	A5KMR
ZFR6S-Q	YJT6KMR
ZKR7A	CT7DKMR
ZKR7A-10	CT7DKMR
NISSAN	
22401-0B015	CT5KMR
22401-12E16	CT6KMMR
22401-19V66	CT6KMMR
22401-1F700	CT6KMR11
22401-1F720	CT5KMMR11
22401-1N516	7LPR
	CT6KMR
22401-20J05	CT5KMMR
22401-20J06	7LPR
	CT6KMR
22401-20J07	CT5KMMR
22401-21B15	CT5FMR
22401-21B16	CT6FMR
	CW7LPR
22401-2J200	CT5KMR11
22401-30R14	CT5KMMR11
22401-40V06	CT6KMMR
22401-50Y04	CT5KMMR11
22401-50Y05	CT5KMMR11
22401-50Y06	CT6KMR11
22401-53J05	CT5KMR
22401-70J19	7LPR
	CT6KMR
22401-74B00	CT5KMMR11
22401-74B11	CT5KMMR11
22401-75507	CT6FMR
	CW7LPR
22401-85E15	CT5KMMR11
22401-85E16	CT6KMR11
22401-8651R	7LPR
	CT6KMR
22401-8H514	CT6KHMR11
22401-8H515	CT5KHMR11
22401-8H516	CT6KHMR11
22401-99B09	CT6KMR11
22401-99B19	CT6KMR11

IAM/OES	MAGNETI MARELLI
NISSAN	
22401-A4705	CT6FMR
	CW7LPR
22401-A4706	CT5FMR
22401-AU015	CT5KHMR11
22401-S2000	CT5FMR
22401-S2100	CT6FMR
	CW7LPR
22401-V0516	CT6FMR
	CW7LPR
22401-V1415	CT5FMR
22401-V1416	CT6FMR
	CW7LPR
22401-V1491	CT6FMR
	CW7LPR
22401-W8915	CT5FMR
22401-W8916	CT6FMR
	CW7LPR
22401-W8917	CT6FMR
	CW7LPR
2240110P16	CT6KMR11
B2401-4A0A0	CT7DKMR
B2401-95F0A	CT5KHMR11
OPEL	
1214002	CT5FMR
1214007	CT6FMR
	CW7LPR
1214009	CT6KMMR
1214018	CW6N
1214019	CW6NP
1214031	A5KMR
1214041	A5KMR
1214091	CT7DKMR
1214134	CW6NP
1214138	CW6NP
1214139	CT6FMR
	CW7LPR
1214144	7LPR
	CT6KMR
1214148	CT6KMMR
1214149	CT5FMR
1214458	CT5KMMR11
1214700	CW6NP
1214801	CW6NP

IAM/OES	MAGNETI MARELLI
OPEL	
1214802	CT6FMR
	CW7LPR
1214805	CW6NP
1214807	CT6FMR
	CW7LPR
4300010	CT6FMR
	CW7LPR
4317021	CT6FMR
	CW7LPR
PORSCHE	
92809460203	CT6FMR
	CW7LPR
99902080210	CW6N
99917000290	CW7NP
99917011990	CT6FMR
	CW7LPR
99917012690	CT6FMR
	CW7LPR
99917012990	CT7DKMR
99917013290	CT5FMR
99917013390	CT5FMR
99917013690	CT5FMR
99917013890	CT6FMR
	CW7LPR
99917013990	CT6FMR
	CW7LPR
99917014190	CW6NP
99917014290	CW6NP
99917014690	CT6FMR
	CW7LPR
99917014890	CT6FMR
	CW7LPR
99917016790	CW6NP
99917016890	CT6FMR
	CW7LPR
99917017090	CT5FMR
99917020490	YJT6KMR
99917020491	YJT6KMR
99917020791	YJT6KMR
99917021890	YJT6KMR
99917021990	YJT6KMR
N178118	CT6FMR
	CW7LPR

IAM/OES	MAGNETI MARELLI
PORSCHE	
N178128	CT6FMR
	CW7LPR
N1781399	CT6FMR
	CW7LPR
PROTON	
LBCP6ES	CT6KMMR
LBCPR6ES	CT6KMMR
LBP5ES	CT5FMR
LBP6ES	CT6FMR
	CW7LPR
MS851232E	CT5FMR
MS851233E	CT6FMR
	CW7LPR
MS851358E	CT6KMR11
RENAULT	
224018760R	CT5LDMR9
6001040356	YJT6KMR
6001040357	YJT6KMR
7439146775	YJT6KMR
7700103502	CT5FMR
7700103503	CT5FMR
7700273462	7LPR
	CT6KMR
7700274004	7LPR
	CT6KMR
7700274154	7LPR
	CT6KMR
7700274155	7LPR
	CT6KMR
7700500000	CT6FMR
	CW7LPR
7700500012	CT5FMR
7700500048	CT5FMR
7700500155	7LPR
	CT6KMR
7700500180	7LPR
	CT6KMR
7700500192	CT5KHMR11
7700529980	CW6NP
7700587168	CW6NP
7700692428	CT5FMR
7700724821	CT5FMR
7700725302	CT5FMR

IAM/OES	MAGNETI MARELLI
RENAULT	
7700733422	CT6FMR
	CW7LPR
7700737457	CT6FMR
	CW7LPR
7700824821	CT5FMR
7700856910	CT6KMMR
7700858444	YJT6KMR
7700868864	CT5FMR
7700869200	CT5KMMR
7701023080	CT6FMR
	CW7LPR
7701041214	CT5FMR
7701366086	CT6FMR
	CW7LPR
7701366138	CT6FMR
	CW7LPR
7701366267	CT6FMR
	CW7LPR
7701366269	CT5FMR
7701366539	CT5FMR
7701414021	CT5FMR
7701414032	CT5FMR
7701414036	CT5FMR
8200020791	7LPR
	CT6KMR
8200020796	7LPR
	CT6KMR
8200021856	7LPR
	CT6KMR
8200030765	CT5LDMR9
8200033622	7LPR
	CT6KMR
8200034236	CT5KHMR11
8200322273	CT5LDMR9
8200332273	CT5LDMR9
8200592215	CT5LDMR9
8200656784	7LPR
	CT6KMR
8200662185	CT5LDMR9
8304504277	A5KMR
8671004086	7LPR
	CT6KMR
8933003862	7LPR
	CT6KMR

IAM/OES	MAGNETI MARELLI
ROVER	
ETC7244	CT5FMR
GSP161	CT6FMR
	CW7LPR
GSP163	CT6FMR
	CW7LPR
GSP264	CT6FMR
	CW7LPR
GSP4362	CT6FM
	CW7LP
GSP4382	CT5FMR
GSP4452	CT6FMR
	CW7LPR
GSP4482	CT5FMR
GSP4552	CT6KMMR
GSP4562	CT6KMMR
GSP4662	7LPR
	CT6KMR
GSP5658	CT6KMR11
GSP6652	7LPR
	CT6KMR
GSP6662	7LPR
	CT6KMR
GSP7662	7LPR
	CT6KMR
GSP7669	CT6FMR
	CW7LPR
NLP000030	YJT6KMR
NLP007666EVA	A5KMR
NLP10010	CT6FM
	CW7LP
NLP100240	CT6KMR11
NLP100260	CT6FMR
	CW7LPR
XHM279	7LPR
	CT6KMR
XHM281	7LPR
	CT6KMR
SAAB	
32000118	YJT6KMR

IAM/OES	MAGNETI MARELLI
SEAT	
SE127919000A	CT6FMR
	CW7LPR
SE127919000B	CT6FMR
	CW7LPR
SE127919000C	CT6FMR
	CW7LPR
SKODA	
SKODBO001	CW6NP
SKODBO002	CW6NP
SKODBO007	CT6KMMR
SMART	
1351500018	CT6KHMR11
A1351500018	CT6KHMR11
SSANGYONG	
1621593046	CT6KMMR
SUBARU	
09482-00299	CT6FMR
	CW7LPR
09482-00506	CT5FMR
22401-AA030	CT6FM
	CW7LP
22401-AA200	CT6FMR
	CW7LPR
22401-AA310	CT6KMR11
22401-AA320	CT6KMR11
22401-AA540	CT6KMR11
22401-KA080	CT6KMR11
22401-KA090	CT6KMMR
22401-KA100	CT6KMMR
22401-KA130	CT6FMR
	CW7LPR
22401-KA150	7LPR
	CT6KMR
22401-KA200	CT5KMMR11
22401-KA210	CT5KMMR11
22401-KA240	CT7DKMR
22401-KA260	CT7DKMR
22401-KA310	CT8DKMR
22401-KA440	CT5KMMR
22401AA020	CT6FMR
	CW7LPR

IAM/OES	MAGNETI MARELLI
SUBARU	
22401AA220	CT6FMR
	CW7LPR
420543200	CT5FMR
420545402	CT5FMR
420545502	CT6FM
	CW7LP
482415700	CT5FMR
490010033	CT5FMR
820541812	CW6N
SUZUKI	
09482-00058	CW6N
09482-00062	CW6NP
09482-00084	CW6NP
09482-00090	CW6NP
09482-00095	CW6N
09482-00105	CW7NP
09482-00118	CT6FMR
	CW7LPR
09482-00131	CT5FMR
09482-00132	CW7NP
09482-00138	CT5FMR
09482-00141	CW6NP
09482-00155	CT5FMR
09482-00160	CT6FMR
	CW7LPR
09482-00188	CW6NP
09482-00189	CW7NP
09482-00190	CW6N
09482-00193	CT6FM
	CW7LP
09482-00244	CW7NP
09482-00244-111	CW7NP
09482-00245	CW6NP
09482-00245-111	CW6NP
09482-00255	CW7NP
09482-00299	CT6FMR
	CW7LPR
09482-00302	CW6NP
09482-00302-111	CW6NP
09482-00338	CW6N
09482-00378	CT8DKMR
09482-00379	CT8DKMR
09482-00392	CT6FM
	CW7LP

IAM/OES	MAGNETI MARELLI
SUZUKI	
09482-00427	7LPR
	CT6KMR
09482-00429	7LPR
	CT6KMR
09482-00432	CT5FMR
09482-00448	CT7DKMR
09482-00449	CT7DKMR
09482-00450	CT8DKMR
09482-00453	CT8DKMR
09482-00468	CT5FMR
09482-00476	CT5KMMR
09482-00477	CT5KMMR
09482-00487	CT6FMR
	CW7LPR
09482-00494	CT6KMR11
09482-00497	CT5KMMR11
09482-00505	7LPR
	CT6KMR
09482-00506	CT5FMR
09482-00508	CT6KMR11
09482-00510	CT6KMR11
09482-00522	CW7NP
09482-00530	CW6NP
09482-00534	CW6N
09482-00605	CT5KHMR11
09482-A00155	CT6FMR
	CW7LPR
09482-M40132	CT5FMR
11192-84E00	A5KMR
1119284E00	A5KMR
99000-79682	CW6N
99000-79683	CW6N
TOYOTA	
80919-76012	CT5KMR
8091976012	CT5KMR
90080-91161-A	CT5KMR11
90080-91193	CT5KMR11
90080-91193-B	CT5KMR11
90080-91200	CT5KMR11
90080-91217	CT5KMR11
90080-91229	CT5KMR
90080-91229-B	CT5KMR
90916-01176	CT5KMR
9091601176	CT5KMR

IAM/OES	MAGNETI MARELLI
TOYOTA	
90919-01051	CT5FMR
90919-01057	CT6FMR
	CW7LPR
90919-01164	CT5KMR11
90919-01165	CT5KMR11
90919-01176	CT5KMR
90919-01177	CT5KMR
90919-01235	CT6KHMR11
90919-01236	CT6KHMR11
90919-01242	CT5KMR11
90919-01244	CT5KMR
90919-01245	CT5KMR
90919-T1002	CT5KMR
90919-T1002-A	CT5KMR
90919-T1003	CT5KMR11
90919-T1004-A	CT6KHMR11
90919-T1005	CT6KHMR11
90919-YZZAD	CT5KMR
90919-YZZAE	CT5KMR11
90999-09001	CT6FM
	CW7LP
0419534020	CT6FM
	CW7LP
9008091161	CT5KMR11
9008091194	CT5KMR11
9091901051	CT5FMR
UNIPART	
ERR3799	CT5FMR
GSP131	CT5FMR
GSP141	CT5FMR
GSP151	CT6FM
	CW7LP
GSP163	CT6FM
	CW7LP
GSP171	CT6FM
	CW7LP
GSP244	CT5FMR
GSP263	CT6FMR
	CW7LPR
GSP264	CT5FMR
GSP540	CW6N
GSP541	CW6NP
GSP550	CW6N
GSP571	CW7NP

IAM/OES	MAGNETI MARELLI
UNIPART	
GSP665	CT6KMMR
GSP2001	7LPR
	CT6KMR
GSP2002	CT6FMR
	CW7LPR
GSP2003	CT6KMMR
GSP2005	CT6KMR11
GSP2007	7LPR
	CT6KMR
GSP2008	CT5FMR
GSP2009	CT6FMR
	CW7LPR
GSP2020	CT5FMR
GSP2024	CJT6FMR
GSP2025	CT5KMR
GSP2029	CW6NP
GSP2030	CJT6FMR
GSP2034	CT5FMR
GSP2037	CT6KMR11
GSP2038	CJT6FMR
GSP2047	CJT6FMR
GSP2049	CW6N
GSP2056	CW6NP
GSP2060	YJT6KMR
GSP2098	CT6FM
	CW7LP
	CT5FMR
GSP2100	CT6KMMR
GSP2103	CT6KMMR
GSP2111	CT6FMR
	CW7LPR
GSP4356	CW7NP
GSP4362	CT6FM
	CW7LP
GSP4362X	CT6FM
	CW7LP
GSP4366	CW6NP
GSP4372	CT5FMR
GSP4382	CT5FMR
GSP4382X	CT5FMR
GSP4456	CW7NP
GSP4456X	CW7NP
GSP4462X	CT6FMR
	CW7LPR
GSP4472	CT5FMR

IAM/OES	MAGNETI MARELLI
UNIPART	
GSP4482	**CT5FMR**
GSP4562	**CT6KMMR**
GSP4562X	**CT6KMMR**
GSP4662	**7LPR**
	CT6KMR
GSP5658	**CT6KMR11**
GSP6356	**CW7NP**
GSP6362	**CT6FM**
	CW7LP
GSP6366	**CW6NP**
GSP6382	**CT5FMR**
GSP6462	**CT6FMR**
	CW7LPR
GSP6462X	**CT6FMR**
	CW7LPR
GSP6472	**CT5FMR**
GSP6562	**CT6KMMR**
GSP6662	**7LPR**
	CT6KMR
GSP6662X	**7LPR**
	CT6KMR
GSP7666	**A5KMR**
GSP7669	**CT6FMR**
	CW7LPR
GSP44523	**CJT6FMR**
GSP44623	**CJT6FMR**
GSP46523	**YJT6KMR**
GSP46623	**YJT6KMR**
NLP007666EVA	**A5KMR**
XMH279	**CT6KMR11**
VALEO	
5N	**CW6N**
6H	**CT6FM**
	CW7LP
6N	**CW6N**
7H	**CT6FM**
	CW7LP
8H	**CT6FM**
	CW7LP
9H	**CT5FMR**
35	**CW6N**
35B	**CW6N**
35HA	**CT6FM**
	CW7LP

IAM/OES	MAGNETI MARELLI
VALEO	
35M	**CW6N**
36	**CW6N**
76H	**CT6FM**
	CW7LP
84H	**CT5FMR**
88N	**CW6NP**
90H	**CT5FMR**
345HS	**CT6FM**
	CW7LP
351	**CW6NP**
351B	**CW6NP**
351D	**CW6NP**
3536D	**CW6NP**
3536P	**CW6NP**
3536R	**CW6NP**
246852	**D6KMR**
AC422Z	**CW6N**
F74H	**CT6KMMR**
F80H	**CT6KMMR**
GT34	**CW7NP**
GT34D	**CW7NP**
GT34HD	**CT6FM**
	CW7LP
GT35	**CW6N**
GT35H	**CT5FMR**
GT35HD	**CT5FMR**
GT342H	**CT6FM**
	CW7LP
GT345	**CW6NP**
GT345D	**CW6NP**
GT345H	**CT6FM**
	CW7LP
GT345HA	**CT6FM**
	CW7LP
GT345HD	**CT6FM**
	CW7LP
M103	**CW6NP**
M123	**CT6KMMR**
M127	**CT6FMR**
	CW7LPR
R76H	**CT6FMR**
	CW7LPR
R84H	**CT5FMR**
R84HZ3YE	**CJT6FMR**
R88N	**CW6NP**

IAM/OES	MAGNETI MARELLI
VALEO	
R90H	**CT5FMR**
RF74H	**CT6KMMR**
RF74HZ3YE	**YJT6KMR**
RF74HZDC	**7LPR**
	CT6KMR
RF80H3	**YJT6KMR**
RF80HZY	**CT5KMR**
RF80LZDC	**CT5KHMR11**
VAUXHALL	
91143773	**CW6NP**
VOLKSWAGEN	
6U0000156	**CT5KMMR**
004081161A	**7LPR**
	CT6KMR
101000000AB	**CT6FMR**
	CW7LPR
101000000AC	**CT5FMR**
101000002AA	**CT5FMR**
101000002AB	**CT6FMR**
	CW7LPR
101000002AC	**CT6FMR**
	CW7LPR
101000004AB	**YJT6KMR**
101000006AB	**CT6FMR**
	CW7LPR
101000006AC	**CT6FMR**
	CW7LPR
101000006AD	**CT5FMR**
101000014AB	**YJT6KMR**
101000017AB	**YJT6KMR**
101000018AA	**CT5FMR**
101000019AA	**CT5FMR**
101000020AA	**CT5FMR**
101000026AA	**CJT6FMR**
101000026AB	**CJT6FMR**
101000033AA	**YJT6KMR**
101000033AF	**YJT6KMR**
101000034AA	**CT6FMR**
	CW7LPR
101000036AA	**CJT6FMR**
101000036AB	**CJT6FMR**
101000036AC	**CJT6FMR**
101000040AC	**CJT6FMR**

IAM/OES	MAGNETI MARELLI
VOLKSWAGEN	
101000040AD	CJT6FMR
101000040AE	CJT6FMR
101000041AC	YJT6KMR
101000041AD	YJT6KMR
101000047AA	CT5FMR
101000049AE	CT5KMMR
101000049AF	CT5KMMR
101000050AA	CJT6FMR
101000050AB	CJT6FMR
101000050AC	CJT6FMR
101000051AA	YJT6KMR
101000054AC	YJT6KMR
101000054AD	YJT6KMR
101000068A	YJT6KMR
101000068AA	YJT6KMR
101905601B	A5KMR
101905603B	A5KMR
101905608AA	YJT6KMR
101905610A	7LPR
	CT6KMR
101905615A	YJT6KMR
101905616	YJT6KMR
101905617	A5KMR
101905617A	A5KMR
101905618	A5KMR
101905618A	A5KMR
194917764	CT5KMMR
197917764	CT5KMMR
199917764	CT5KMMR
199917766	7LPR
	CT6KMR
JZW905603D	YJT6KMR
N01780113	CW6N
N01781139	CT6FMR
	CW7LPR
N01781155	CT6FMR
	CW7LPR
N01781175	CT6FMR
	CW7LPR
N01781213	CT6FMR
	CW7LPR
N01781234	CT5FMR
N01781236	CT6FMR
	CW7LPR

IAM/OES	MAGNETI MARELLI
VOLKSWAGEN	
N01781240	CT6FMR
	CW7LPR
N01781241	CT5FMR
N01781253	CT6FMR
	CW7LPR
N01781333	CT6FMR
	CW7LPR
VOLVO	
109X9146775	YJT6KMR
207X9146775	YJT6KMR
304X9146775	YJT6KMR
402X9146775	YJT6KMR
135827	CW6NP
241402	CW6NP
270746-1	CT6FMR
	CW7LPR
271409-5	CT6FMR
	CW7LPR
271603	7LPR
	CT6KMR
271727	7LPR
	CT6KMR
272372	YJT6KMR
1306605	CT6FMR
	CW7LPR
1346541	CT6FMR
	CW7LPR
1357828	CW6NP
1367528	CT6FMR
	CW7LPR
1367529	CT6FMR
	CW7LPR
1367529.3	CT6FMR
	CW7LPR
1667529	CT6FMR
	CW7LPR
2714277	7LPR
	CT6KMR
2716363	7LPR
	CT6KMR
2717270	YJT6KMR
2735975	CT6FMR
	CW7LPR

IAM/OES	MAGNETI MARELLI
VOLVO	
3517980	7LPR
	CT6KMR
8642660	YJT6KMR
8642661	YJT6KMR
9146775	YJT6KMR
13066048	CT6FMR
	CW7LPR
13465414	CT6FMR
	CW7LPR
30650843	CT6KHMR11
33443151	CT5FMR
YAMAHA	
9079E-ND002	CW6N
9079E-ND011	CW6N
9079E-ND022	CT6FM
	CW7LP
9079E-ND023	CW6NP
9079E-ND024	CW6NP
9079E-ND028	CW7NP
9079E-ND040	CW7NP
9079E-ND071	CT6FMR
	CW7LPR
9079E-ND072	CT5FMR
9079E-ND075	CT5FMR
9079E-ND081	CT5KHMR11
90890-78094	CW6N
94701-00039	CW6N
94701-00050	CW7NP
94701-00108	CW6NP
94701-00116	CT6FMR
	CW7LPR
94701-00198	CW6NP
94701-00220	CW7NP
94701-00227	CW7NP
94701-00232	CW6NP
94701-00234	CT6FMR
	CW7LPR
94701-00248	CW6N
94701-00273	CW6N
94701-00274	CW6N
94701-00328	CT5FMR
94702-00274	CW6N
94702-00391	CT5KHMR11
94702-00427	CT6KHMR11

IAM/OES	MAGNETI MARELLI
YAMAHA	
9470200234	**CT6FMR**
	CW7LPR
94703-00039	**CW6N**
94703-00050	**CW7NP**
94703-00108	**CW6NP**
94703-00116	**CT6FMR**
	CW7LPR

IAM/OES	MAGNETI MARELLI
YAMAHA	
94703-00133	**CT5FMR**
94703-00198	**CW6NP**
94703-00223	**CW6NP**
94703-00227	**CW7NP**
94703-00234	**CT6FMR**
	CW7LPR
94703-00235	**CW6NP**

IAM/OES	MAGNETI MARELLI
YAMAHA	
94703-00327	**CW7NP**
94709-00391	**CT5KHMR11**
94709-00400	**CT6KHMR11**
IQG-10862-20	**CT7DKMR**

Impaginazione: JGL di Basano ing. Gabriele & C. snc – Collegno (To) Italy
Stampa: A4 Servizi Grafici di Serra Sergio & C. snc – Chivasso (To) Italy

ITALY
Viale Aldo Borletti, 61/63
20011 Corbetta (Milano)
Tel. +39 02 928 15 111 • Fax +39 02 972 27 234

Export
Viale Aldo Borletti, 61/63
20011 Corbetta (Milano) Italy
Tel +39 02 972 28 881 • Fax +39 02 972 27 755

SPAIN
Polígono Industrial G-2 Collsabadell
Ronda de Collsabadell, 1-3
08450, Llinars del Vallès (Barcelona)
Tel. +34 93 841 35 30

FRANCE
Z.A. Trappes Elancourt
5-7 rue Albert Einstein - 78190 Trappes
tel +33 (0)1 3016 6960 • Fax +33 (0)1 3016 6961

GERMANY
Salzstrasse 185/1
74076 Heilbronn
Tel. +49 7131 2910 • Fax +49 7131 165236

POLAND & RUSSIA
Plac pod Lipami 5
40-476 Katowice
Tel. +48 32 603 61 07 • Fax +48 32 603 61 08

BRAZIL
Av. Manoel da Nóbrega, 196
Conj. 14 - Bairro Capuava - Mauá - São Paulo
CEP 09380.120
Tel. +55 0800 0194 054 (Cofap Products) • +55 0800 191 638 (Magneti Marelli Products)

ARGENTINA
Hipólito Yrigoyen 571, 8 Floor,
B1638AIE, Vicente López - Buenos Aires
Tel. +54 11 4589 0850 • Fax +54 11 4589 0850

CHINA
685 Ju Jin Rd, Shanghai Free Trade Pilot Zone,
P.R.C. 201208
Tel. +86 21 205 06 000 • Fax +86 21 586 96 978

TURKEY
Büyükdere Cad. Tofaş Han No.145
Zincirlikuyu, 34394 Istanbul
Ph: +90 212 217 02 97 • Fax: +90 212 217 02 95

Magneti Marelli After Market Parts and Services S.p.A.
Viale Aldo Borletti, 61/63 - 20011 Corbetta (Milano) Italia
Tel. +39 02 928 15 111 • Fax +39 02 972 27 234
www.magnetimarelli-checkstar.com

09-17 099995371707 Copyright Magneti Marelli After Market Parts and Services S.p.A. 2017

8 435034 950526